STATE OF MISSOURI
JEFFERSON COUNTY PUBLIC WORKS DEPARTMENT
PLANS FOR THE PROPOSED STRUCTURE REPLACEMENT
OF
HILLSBORO - HOUSE SPRINGS ROAD
OVER
TRIBUTARY TO BELEW CREEK

DESIGN DESIGNATION

LOCAL / RURAL MINOR COLLECTOR
ADT 2012 / 400 — CURRENT SPEED 30 MPH
DESIGN ADT 2032 /1000 — DESIGN SPEED 30 MPH
TRUCKS 5% — POSTING TO REMAIN @ 30 MPH

SYMBOL LEGEND

A/C UNIT	GRATED MANHOLE	STORM MANHOLE
BOLLARD	GUY WIRE ANCHOR	STUMP
BUSH	LANDSCAPE LIGHT	TELEPHONE PEDESTAL
CLEANOUT	LAWN SPRINKLER	TELEPHONE PULLBOX
COMBINED MANHOLE	LIGHT STANDARD	TEMPORARY CONSTRUCTION EASEMENT
CURB/AREA INLET	MONITORING WELL	TREE, DECIDUOUS
ELECTRIC MANHOLE	PARKING METER	TREE, CONIFEROUS
ELECTRIC METER	POWER POLE	TRAFFIC SIGNAL MAST ARM
ELECTRIC PEDESTAL	PROPOSED ROW	TRAFFIC SIGNAL PEDESTAL
ELECTRIC PULLBOX	ROW MARKER	UTILITY MARKER
FIRE HYDRANT	RR FLASHERS	WATER MANHOLE
GAS DRIP	SAMPLING TEE	WATER METER
GAS METER	SANITARY MANHOLE	WATER VALVE
GAS VALVE	SIGN	
GRATED INLET	SOIL BORING	

DECEMBER 12, 2019

JEFFERSON COUNTY

SECTION 10, TWP. 41 N., RANGE 4 E.

INDEX OF SHEETS

SHEET NO.	DESCRIPTION OF SHEET
1	COVER SHEET
2	TYPICAL SECTIONS
2A	SUMMARY OF QUANTITIES
2B	SCHEDULE OF QUANTITIES
2BS	SCHEDULE OF QUANTITIES (SIGNS)
3	PLAN AND PROFILE
4	RIGHT-OF-WAY PLAT
5	COORDINATE POINTS
6	SPECIAL SHEET (TYPE 2 ROCK BLANKET)
7	TRAFFIC CONTROL (ROAD CLOSED)
8	TRAFFIC CONTROL (SIGNS)
9	EROSION CONTROL
10-31	BRIDGE DRAWINGS
32-34	ROADWAY SECTIONS
35-36	CHANNEL SECTIONS

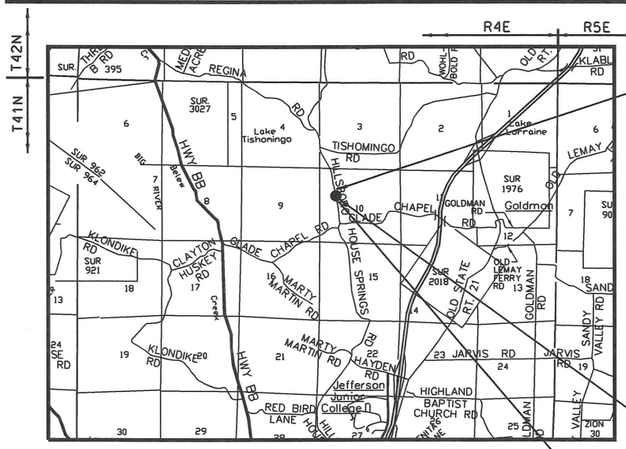

RIGHT OF WAY ENDS
STA. 14+50
CONSTRUCTION ENDS
STA. 14+25

RIGHT OF WAY, GRADING, DRAINAGE, BRIDGE, GUARDRAIL AND PAVEMENT

CONSTRUCTION BEGINS
STA. 12+60
RIGHT OF WAY BEGINS
STA. 12+15

PROJECT LOCATION
38° 18′ 22″ N
90° 34′ 06″ W

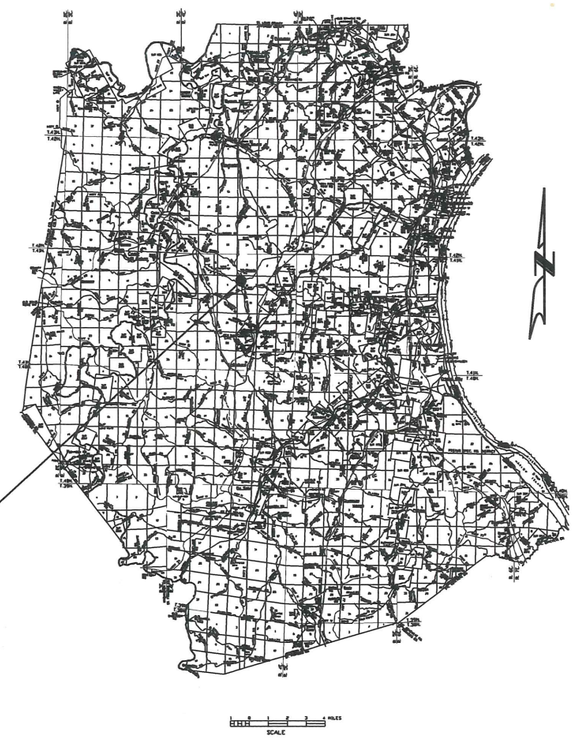

LOCATION MAP
NET CONSTRUCTION LENGTH 165.0 FEET (0.0313 MILES)

Line Legend

Existing Right of Way
Proposed Right of Way — ROW
Permanent Drainage Easement — PDE
Temporary Construction Easement — TCE
Overhead Electric — OE
Underground Telephone — UT
Slope limit — SL
Proposed Ditch
Property Line — PL

Control Benchmark:
Station JE-19, Elevation: 662.63

Site Benchmarks:(NAVD 1988)

BM-1 - CPS in Power Pole East of Hillsboro-House Springs Road and South of Bridge.
Station 10+53.60, 18.68′ Rt.
Elevation 594.39

UTILITIES

TELEPHONE	ELECTRIC
AT&T JEREMIAH D. KINEALY 12851 MANCHESTER RD DES PERES, MO 63131 (314) 335-6058	AMEREN U.E. MR. BILL ROSENER CONSULTING ENGINEER 6450 HIGHWAY MM HOUSE SPRINGS, MO 63051 (636) 671-6162

UTILITY LOCATION SERVICE
1-800-DIG-RITE

APPROVED FOR CONSTRUCTION

PUBLIC WORKS DIRECTOR — DATE 4-17-2020

STATE OF MISSOURI — STEPHEN ALSBURY — NUMBER E-24698 — REGISTERED PROFESSIONAL ENGINEER

DATE PREPARED: 12/12/2019
STATE: MO — SHEET NO.: 1
ROUTE: H-HOUSESPRINGS
COUNTY: JEFFERSON
JOB NO.: 19-6043
PROJECT NO.:
BRIDGE NO.:

DATE	DESCRIPTION

JEFFERSON COUNTY PUBLIC WORKS DEPARTMENT
P.O. BOX 100
HILLSBORO, MO 63050
(636-797-5340) PHONE
(636-797-5565) FAX

ABNA
4140 LINDELL BOULEVARD
ST. LOUIS, MO 63108
PH. 314-454-0222
CERTIFICATE/LICENSE NO. 001501

IF A SEAL IS PRESENT ON THIS SHEET IT HAS BEEN ELECTRONICALLY SEALED AND DATED.

REV.

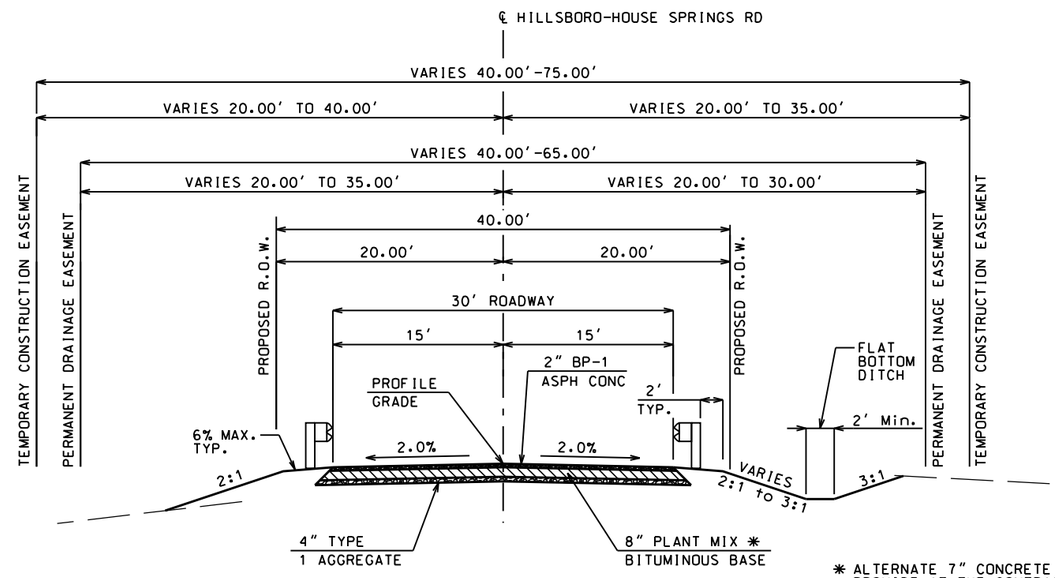

✱ ALTERNATE 7" CONCRETE PCCP MAY PROVIDE AT THE CONTRACTOR'S OPTION IT IS THE CONSTRACTORS RESPONSIBLILTY FOR ADJUSTMENTS TO SUBGRADE ELEVATION.

PROPOSED TYPICAL CROSS SECTION
HILLSBORO-HOUSE SPRINGS ROAD

STA 12+60.00 TO STA 12+88.62
STA 13+81.38 TO STA 14+25.00

BRIDGE APPROACH SLAB (MINOR ROAD)
STA 12+88.62 TO STA 13+08.62
STA 16+31.38 TO STA 13+81.38

Detailed Oct 2019
Checked Oct 2019

Note: This drawing is not to scale. Follow dimensions.

TYPICAL SECTIONS

STATE OF MISSOURI
STEPHEN ALSBURY
NUMBER E-24698
REGISTERED PROFESSIONAL ENGINEER

DATE PREPARED	
12/12/2019	
STATE	SHEET NO.
MO	2
ROUTE	
H-HOUSESPRINGS	
COUNTY	
JEFFERSON	
JOB NO.	
19-6043	
PROJECT NO.	
.	
BRIDGE NO.	
.	

DATE	DESCRIPTION
.	.
.	.
.	.
.	.
.	.
.	.

IF A SEAL IS PRESENT ON THIS SHEET IT HAS BEEN ELECTRONICALLY SEALED AND DATED.

JEFFERSON COUNTY PUBLIC WORKS DEPARTMENT
P.O. BOX 100
HILLSBORO, MO 63050
(636-797-5340) PHONE
(636-797-5565) FAX

ABNA
4140 LINDELL BOULEVARD
ST. LOUIS, MO 63108
PH. 314-454-0222
CERTIFICATE/LICENSE NO. 001501

J:\2019\6043\Cadd\Design\002_19-6043_SHT_Typ Sections.dgn 6:42:59 AM 12/12/2019

ESTIMATED QUANTITIES

ITEM NO.	DESCRIPTION	UNIT	QUANTITY
Roadway			
2013000	Clearing & Grubbing	ACRE	0.2
2022010	Removal of Improvements	LS	1.0
2031000	Class A Excavation	CUYD	466.0
2036000	Compacting Embankment	CUYD	103.0
3040143	Type 1 Aggregate (4" Thick)	SQYD	255.0
4011209	Bituminous Pavement Mixture Surface (BP-1)	TON	28.0
4013000	Bituminous Pavement Mixture (Base)	TON	112.0
4071005	Tack Coat	GAL	10.0
6062100	Bridge Anchor Section (Curb Type)	EA	4.0
6062303	Asymetrical Transition Section, 6.5 FT Post	EA	4.0
6063015	Type A Crashworthy End Terminal	EA	4.0
6113020	Furnishing Type 2 Rock Blanket	CUYD	200.0
6113040	Placing Type 2 Rock Blanket	CUYD	200.0
6161005	Construction Signs	SQFT	189.0
6161052	Warning Light, Type B	EA	12.0
6161030	Type III Moveable Barricade	EA	8.0
6161098A	Changeable Message Sign, without Comm. Interface Contractor Furnished & Retained	EA	2.0
6181000	Mobilization	LS	1.0
6274000	Contractor Furnished Surveying and Staking	LS	1.0
8061019	Silt Fence	LF	353.0
8061050	Type C Berm	LF	144.0

ESTIMATED QUANTITIES

ITEM NO.	DESCRIPTION	UNIT	QUANTITY
Bridge			
2061000	Class 1 Excavation	CUYD	160.0
2160500	Removal of Bridges	LS	1.0
5031011A	Bridge Approach Slab (Minor Road)	SQYD	138.0
7021210	Galvanized Structural Steel Piles (10 in)	LF	165.0
7026000	Pre-Bore For Piling	LF	147.0
7027000	Pile Point Reinforcement	EA	10.0
7032003	Class B Concrete (Substructure)	CUYD	29.2
7034213	Slab on Concrete I-Girder	SQYD	192.0
7034215	Safety Barrier Curb	LF	143.0
7056000	Type 2 (32") Prestressed Concrete I-Girder	LF	255.0
7123301	Steel Intermediate Diaphragm for P/S Concrete Girders	EA	4.0
7151001	Vertical Drain at End Bents	EA	2.0
7161003	Laminated Neoprene Bearing Pad (Tapered)	EA	10.0
Striping			
6206000C	4" White Acrylic Waterborne Pavement Marking Paint, Type P Beads	LF	325.0
6206001C	4" Yellow Acrylic Waterborne Pavement Marking Paint, Type P Beads	LF	325.0
Landscaping			
8051000A	Seeding	ACRE	0.2

Detailed Oct 2019
Checked Oct 2019

Note: This drawing is not to scale. Follow dimensions.

SUMMARY OF QUANTITIES

STATE OF MISSOURI
STEPHEN ALSBURY
NUMBER E-24698
REGISTERED PROFESSIONAL ENGINEER

DATE PREPARED 12/12/2019
STATE MO
SHEET NO. 2-A
ROUTE H-HOUSESPRINGS
COUNTY JEFFERSON
JOB NO. 19-6043
PROJECT NO. .
BRIDGE NO. .

DATE	DESCRIPTION
.	.
.	.
.	.
.	.
.	.
.	.
.	.

IF A SEAL IS PRESENT ON THIS SHEET IT HAS BEEN ELECTRONICALLY SEALED AND DATED.

JEFFERSON COUNTY PUBLIC WORKS
DEPARTMENT
P.O. BOX 100
HILLSBORO, MO 63050
(636-797-5340) PHONE
(636-797-5565) FAX

ABNA
4140 LINDELL BOULEVARD
ST. LOUIS, MO 63108
PH. 314-454-0222
CERTIFICATE/LICENSE NO. 001501

CLEARING & GRUBBING = 0.2 ACRES

REMOVAL OF IMPROVEMENTS = 1 LUMP SUM

-Asphalt Pavement Sta. 12+60 to Sta. 14+25 = 470 Sq Yd
-Panel Markers at Each End of Ex. Bridge = 4 Each ✱
-Load Limit Signs at Ex. Bridge = 2 Each ✱

✱ Signs to be Stored for County to Pick Up.

EARTH WORK SUMMARY	CUT CU YD	FILL CU YD
CLASS A EXCAVATION (MAIN LINE)	54	103
CLASS A EXCAVATION (CHANNEL)	412	
ESTIMATED EXCESS ✱		363
TOTALS	466	466

✱ For Information Only

BRIDGE APPROACH SLAB (MINOR ROAD)

LOCATION	LENGTH FEET	WIDTH FEET	BRIDGE APPROACH SLAB (SQ YD)
12+88.62 to 13+08.62	20.0	31' AVG.	69.0
13+31.38 to 13+81.38	20.0	31' AVG.	69.0
TOTALS			138.0

ASPHALTIC PAVEMENT & BASE

LOCATION	LENGTH FEET	WIDTH FEET	AREA SQ YD	2" BP-1 TON	8" BIT. BASE TON	0.035 G/SY TACK GAL (2)	TYPE 1 AGGREGATE WIDTH	TYPE 1 AGGREGATE 4" SQ YD
12+60 TO 12+88.62	28.6	30.0	95	11.0	44.0	4	31.67	101
13+81.38 TO 14+25	43.6	30.0	145	17.0	68.0	6	31.67	154
TOTALS				28.0	112.0	10		255

GUARDRAIL

LOCATION	BRIDGE ANCHOR EACH	TRANS SECTION EACH	TYPE A TERMINAL EACH	REMARKS
SOUTH APPROACH	1	1	1	Connect to Safety Barrier Curb, Typical
SOUTH DEPARTING	1	1	1	Connect to Safety Barrier Curb, Typical
NORTH APPROACH	1	1	1	Connect to Safety Barrier Curb, Typical
NORTH DEPARTING	1	1	1	Connect to Safety Barrier Curb, Typical
TOTALS	4	4	4	

FURNISHING & PLACING TYPE 2 ROCK BLANKET

LOCATION	CU YD
SOUTH	100
NORTH	100
TOTALS	200

MOBILIZATION = 1 LUMP SUM

CONTRACTOR FURNISHED SURVEYING AND STAKING = 1 LUMP SUM

4" WHITE PAVEMENT MARKING

EDGE LINES 12' LT & RT
STA 11+75 TO STA 15+25 = 325 LIN FT

4" YELLOW PAVEMENT MARKING

DOUBLE SOLID CENTERLINE
STA 11+75 TO STA 15+25 = 325 LIN FT

SEEDING = 0.2 ACRE

Detailed Oct 2019
Checked Oct 2019

Note: This drawing is not to scale. Follow dimensions.

SCHEDULE OF QUANTITIES

STATE OF MISSOURI
STEPHEN ALSBURY
NUMBER E-24698
REGISTERED PROFESSIONAL ENGINEER

DATE PREPARED 12/12/2019
STATE MO
SHEET NO. 2B
ROUTE H-HOUSESPRINGS
COUNTY JEFFERSON
JOB NO. 19-6043
PROJECT NO. .
BRIDGE NO. .

DATE	DESCRIPTION
.	.
.	.
.	.
.	.
.	.
.	.
.	.

IF A SEAL IS PRESENT ON THIS SHEET IT HAS BEEN ELECTRONICALLY SEALED AND DATED.

JEFFERSON COUNTY PUBLIC WORKS DEPARTMENT
P.O. BOX 100
HILLSBORO, MO 63050
(636-797-5340) PHONE
(636-797-5565) FAX

ABNA
4140 LINDELL BOULEVARD
ST. LOUIS, MO 63108
PH. 314-454-0222
CERTIFICATE/LICENSE NO. 001501

EFFECTIVE: 10-01-2019

SIGN	SIZE IN.	AREA SQ.FT.	QTY EACH	TOTAL AREA SQ.FT.	QTY RELOC EACH	TOTAL RELOC SQ.FT.	SIGN NUM.	DESCRIPTION
WARNING SIGNS								
W01-1L	48X48	16.00						TURN (SYMBOL LEFT ARROW)
W01-1R	48X48	16.00						TURN (SYMBOL RIGHT ARROW)
W01-2L	48X48	16.00						CURVE (SYMBOL LEFT ARROW)
W01-2R	48X48	16.00						CURVE (SYMBOL RIGHT ARROW)
W01-3L	48X48	16.00						REVERSE TURN (SYMBOL LEFT ARROW)
W01-3R	48X48	16.00						REVERSE TURN (SYMBOL RIGHT ARROW)
W01-4L	48X48	16.00						REVERSE CURVE (SYMBOL LEFT ARROW)
W01-4R	48X48	16.00						REVERSE CURVE (SYMBOL RIGHT ARROW)
W01-4bL	48X48	16.00						DOUBLE ARROW REVERSE CURVE (SYMBOL LT ARROWS)
W01-4bR	48X48	16.00						DOUBLE ARROW REVERSE CURVE (SYMBOL RT ARROWS)
W01-4cL	48X48	16.00						TRIPLE ARROW REVERSE CURVE (SYMBOL LT ARROWS)
W01-4cR	48X48	16.00						TRIPLE ARROW REVERSE CURVE (SYMBOL RT ARROWS)
W01-6	60X30	12.50						HORIZONTAL ARROW (SYMBOL)
W01-6a	72X36	18.00						HORIZ. ARROW (SYMBOL ON PERMANENT BARRICADE)
W01-7	60X30	12.50						DOUBLE HEAD HORIZONTAL ARROW (SYMBOL)
W01-7a	72X36	18.00						DOUBLE HEAD HORIZ. ARROW (SYMBOL ON PERM. BARR.)
W01-8	18X24	3.00						CHEVRON (SYMBOL)
W01-8a	30X36	7.50						CHEVRON (SYMBOL FOR DIVIDED HIGHWAYS)
W03-1	48X48	16.00						STOP AHEAD (SYMBOL)
W03-2	48X48	16.00						YIELD AHEAD (SYMBOL)
W03-3	48X48	16.00						SIGNAL AHEAD (SYMBOL)
W03-4	48X48	16.00						BE PREPARED TO STOP
W03-5	48X48	16.00						SPEED LIMIT AHEAD
W04-1L	48X48	16.00						MERGE (SYMBOL FROM LEFT)
W04-1R	48X48	16.00						MERGE (SYMBOL FROM RIGHT)
W04-1aL	48X48	16.00						MERGE (ARROW SYMBOL)
W04-1aR	48X48	16.00						MERGE (ARROW SYMBOL)
W05-1	48X48	16.00						ROAD/BRIDGE/RAMP NARROWS
W05-3	48X48	16.00						ONE LANE BRIDGE
W05-5	48X48	16.00						NARROW LANES
W06-1	48X48	16.00						DIVIDED HIGHWAY (SYMBOL)
W06-2	48X48	16.00						DIVIDED HIGHWAY END (SYMBOL)
W06-3	48X48	16.00						TWO WAY TRAFFIC (SYMBOL)
W07-3a	30X24	5.00						NEXT XX MILES (PLAQUE)
W08-1	48X48	16.00						BUMP
W08-2	48X48	16.00						DIP
W08-3	48X48	16.00						PAVEMENT ENDS
W08-4	48X48	16.00						SOFT SHOULDER
W08-5	48X48	16.00						SLIPPERY WHEN WET (SYMBOL)
W08-6	48X48	16.00						TRUCK CROSSING
W08-6c	48X48	16.00						TRUCK ENTRANCE
W08-7	36X36	9.00						LOOSE GRAVEL
W08-7a	36X36	9.00						FRESH OIL/LOOSE GRAVEL
W08-9	48X48	16.00						LOW SHOULDER
W08-11	48X48	16.00						UNEVEN LANES
W08-12	48X48	16.00						NO CENTER LINE
W08-15	48X48	16.00						GROOVED PAVEMENT
W08-15P	30X24	5.00						MOTORCYCLE (PLAQUE)
W08-17	48X48	16.00						SHOULDER DROP-OFF (SYMBOL)
W08-17P	30X24	5.00						SHOULDER DROP-OFF (PLAQUE)
W10-1	42RND.	9.62						RAILROAD CROSSING
W012-1	24X24	4.00						DOUBLE DOWN ARROW (SYMBOL)
W012-2	48X48	16.00						LOW CLEARANCE (SYMBOL)
W012-2X	24X18	3.00						LOW CLEARANCE (PLAQUE)
W012-2a	84X24	14.00						OVERHEAD LOW CLEARANCE (FEET AND INCHES)
W012-4	120X60	50.00						LOW CLEARANCE XX FT XX IN XX MILES AHEAD
W012-5	120X60	50.00						WIDTH RESTRICTION XX FT XX IN XX MILES AHEAD
W013-1	30X30	6.25						ADVISORY SPEED (PLAQUE)
W016-2	30X24	5.00	4	20.00				XXX FEET (PLAQUE)
W016-3	30X24	5.00						X MILE (PLAQUE)
W020-1	48X48	16.00	2	32.00				ROAD/BRIDGE/RAMP WORK AHEAD
W020-2	48X48	16.00						DETOUR AHEAD
W020-3	48X48	16.00	6	96.0				ROAD CLOSED AHEAD
W020-4	48X48	16.00						ONE LANE ROAD AHEAD
W020-5	48X48	16.00						RIGHT/CENTER/LEFT LANE CLOSED AHEAD
W020-5a	48X48	16.00						2 RIGHT/CENTER/LEFT LANES CLOSED AHEAD
W020-6a	48X48	16.00						RIGHT/CENTER/LEFT LANE CLOSED
W020-7a	48X48	16.00						FLAGGER (SYMBOL) WITH FLAGS
W021-2	36X36	9.00						FRESH OIL
W021-5	48X48	16.00						SHOULDER WORK AHEAD
W022-1	48X48	16.00						BLASTING ZONE AHEAD
W022-2	42X36	10.50						TURN OFF 2-WAY RADIO AND PHONE
W022-3	42X36	10.50						END BLASTING ZONE
G022-1	21X15	2.19						WET PAINT (ARROW PIVOTS)

SIGN	SIZE IN.	AREA SQ.FT.	QTY EACH	TOTAL SQ.FT.	QTY RELOC EACH	TOTAL RELOC SQ.FT.	SIGN NUM.	DESCRIPTION
GUIDE SIGNS								
E05-1	36X48	12.00						GORE EXIT
E05-2	48X36	12.00						EXIT OPEN
E05-2a	48X36	12.00						EXIT CLOSED
G020-1	60X24	10.00						ROAD WORK NEXT XX MILES
G020-2	48X24	8.00	2	16.00				END ROAD WORK
G020-4	36X18	4.50						PILOT CAR FOLLOW ME
G020-4a	42X30	8.75						PILOT CAR IN USE WAIT & FOLLOW
G020-4a	18X12	1.50						PILOT CAR IN USE WAIT & FOLLOW
G020-5aP	36X24	6.00						WORK ZONE (PLAQUE)
M04-8a	24X18	3.00						END DETOUR
M04-9L	48X36	12.00						DETOUR (LEFT ARROW)
M04-9R	48X36	12.00						DETOUR (RIGHT ARROW)
M04-9P	48X12	4.00						STREET NAME (PLAQUE)
M04-10L	48X18	6.00						DETOUR (ARROW LEFT)
M04-10R	48X18	6.00						DETOUR (ARROW RIGHT)
REGULATORY SIGNS								
R1-1	48X48	13.25						STOP
R1-2	48TRI.	6.93						YIELD
R1-2a	36X36	9.00						TO ONCOMING TRAFFIC (PLAQUE)
R1-3P	30X12	2.50						ALL WAY (PLAQUE)
R2-1	36X48	12.00						SPEED LIMIT XX
R3-1	48X48	16.00						NO RIGHT TURN (SYMBOL)
R3-2	48X48	16.00						NO LEFT TURN (SYMBOL)
R3-3	36X36	9.00						NO TURNS
R3-4	48X48	16.00						NO U-TURN (SYMBOL)
R3-7L	30X30	6.25						LEFT LANE MUST TURN LEFT
R3-7R	30X30	6.25						RIGHT LANE MUST TURN RIGHT
R4-1	36X48	12.00						DO NOT PASS
R4-2	36X48	12.00						PASS WITH CARE
R4-8a	36X48	12.00						KEEP LEFT (HORIZONTAL ARROW)
R4-7a	36X48	12.00						KEEP RIGHT (HORIZONTAL ARROW)
R5-1	30X30	6.25						DO NOT ENTER
R5-1a	36X24	6.00						WRONG WAY
R6-1L	54X18	6.75						ONE WAY ARROW (LEFT)
R6-1R	54X18	6.75						ONE WAY ARROW (RIGHT)
R6-2L	24X30	5.00						ONE WAY (LEFT)
R6-2R	24X30	5.00						ONE WAY (RIGHT)
R9-9	24X12	2.00						SIDEWALK CLOSED
R9-11L	24X18	3.00						SIDEWALK CLOSED AHEAD. (ARROW LEFT) CROSS HERE
R9-11R	24X18	3.00						SIDEWALK CLOSED AHEAD. (ARROW RIGHT) CROSS HERE
R10-6	24X36	6.00						STOP HERE ON RED (45° ARROW)
R11-2	48X30	10.00						ROAD CLOSED
R11-3a	60X30	12.50	2	25.00				ROAD CLOSED XX MILES AHEAD LOCAL TRAFFIC ONLY
R11-4	60X30	12.50						ROAD CLOSED TO THRU TRAFFIC
CONST-3A	60X48	20.00						FINE SIGN
CONST-3X	56X12	4.67						SPEEDING/PASSING (PLATE)
MISCELLANEOUS SIGNS								
CONST-5	48X36	12.00						POINT OF PRESENCE
CONST-5	96X48	32.00						POINT OF PRESENCE
CONST-7	48X24	8.00						RATE OUR WORK ZONE
CONST-7	72X36	18.00						RATE OUR WORK ZONE
CONST-8	48X36	12.00						WORK ZONE NO PHONE ZONE

	TOTAL
616-10.05 CONSTRUCTION SIGNS	189.0
616-10.10 RELOCATED SIGNS	0

ITEM NUMBER	TOTAL QTY	DESCRIPTION
6122008		IMPACT ATTENUATOR 40 MPH (SAND BARRELS)
6122009		IMPACT ATTENUATOR 45 MPH (SAND BARRELS)
6122010		IMPACT ATTENUATOR 50 MPH (SAND BARRELS)
6122012		IMPACT ATTENUATOR 55 MPH (SAND BARRELS)
6122014		IMPACT ATTENUATOR 60 MPH (SAND BARRELS)
6122017		IMPACT ATTENUATOR 65 MPH (SAND BARRELS)
6122019		IMPACT ATTENUATOR 70 MPH (SAND BARRELS)
6122020		REPLACEMENT SAND BARREL
6122030		IMPACT ATTENUATOR (RELOCATION)
6123000A		TRUCK OR TRAILER MOUNTED ATTENUATOR (TMA)
6161007		SPEED LIMIT AND STROBE LIGHT ASSEMBLY
6161008		ADVANCED WARNING RAIL SYSTEM
6161009		FLAG ASSEMBLY
6161012		BUOYS (BOATS KEEP OUT)
6161013		BUOYS (NO WAKE)
6161014		SPECIAL SIGN ASSEMBLY (BOATS KEEP OUT)
6161024		CHANNELIZER (TRIM LINE) WITH LIGHT
6161025		CHANNELIZER (TRIM LINE)
6161030	8	TYPE III MOVEABLE BARRICADE
6161031		TYPE III MOVEABLE BARRICADE WITH LIGHTS
6161033		DIRECTION INDICATOR BARRICADE
6161034		DIRECTION INDICATOR BARRICADE. WITH LIGHT
6161040		FLASHING ARROW PANEL
6161047		TYPE III OBJECT MARKER
6161052	12	WARNING LIGHT. TYPE B
6161055		SEQUENTIAL FLASHING WARNING LIGHT
6161070		TUBULAR MARKER
6161095		RADAR SPEED ADVISORY SYSTEM
6161096		CHANGEABLE MESSAGE SIGN. COMMISSION FURNISHED/RETAINED
6161098A	2	CHANGEABLE MESSAGE SIGN W/O COMM. INTERFACE. CONTRACTOR FURNISHED/RETAINED
6161099		CHANGEABLE MESSAGE SIGN WITH COMM. INTERFACE. CONTRACTOR FURNISHED/RETAINED
6162000A		WORK ZONE TRAFFIC SIGNAL SYSTEM
6162002		TEMPORARY LONG-TERM RUMBLE STRIPS
6162004		TEMPORARY SHORT-TERM RUMBLE STRIPS
6173600D		TEMPORARY TRAFFIC BARRIER CONTRACTOR FURNISHED/RETAINED
6173602B		TEMPORARY TRAFFIC BARRIER CONTRACTOR FURNISHED/COMMISSION RETAINED
6174000A		TEMP. TRAFFIC BARRIER HEIGHT TRANSITION
6175010A		RELOCATING TEMPORARY TRAFFIC BARRIER
6176000B		TEMPORARY TRAFFIC BARRIER COMMISSION FURNISHED/RETAINED
6177000B		TEMP. TRAFFIC BARRIER HEIGHT TRANSITION COMMISSION FURNISHED/RETAINED
6208064A		TEMPORARY RAISED PAVEMENT MARKER
9029400		TEMPORARY TRAFFIC SIGNALS
9029401		TEMPORARY TRAFFIC SIGNALS AND LIGHTING

STATE OF MISSOURI
STEPHEN ALSBURY
NUMBER E-24698
REGISTERED PROFESSIONAL ENGINEER

DATE PREPARED 12/12/2019
STATE MO | SHEET NO. 2BS
ROUTE H-HOUSESPRINGS
COUNTY JEFFERSON
JOB NO. 19-6043
PROJECT NO. .
BRIDGE NO. .

DATE	DESCRIPTION
.	.
.	.
.	.
.	.
.	.
.	.

IF A SEAL IS PRESENT ON THIS SHEET IT HAS BEEN ELECTRONICALLY SEALED AND DATED.

JEFFERSON COUNTY PUBLIC WORKS DEPARTMENT
P.O. BOX 100
HILLSBORO, MO 63050
(636-797-5340) PHONE
(636-797-5565) FAX

ABNA
4140 LINDELL BOULEVARD
ST. LOUIS, MO 63108
PH. 314-454-0222
CERTIFICATE/LICENSE NO. 001501

Detailed Oct 2019
Checked Oct 2019

Note: This drawing is not to scale. Follow dimensions.

SCHEDULE OF QUANTITIES (SIGNS)

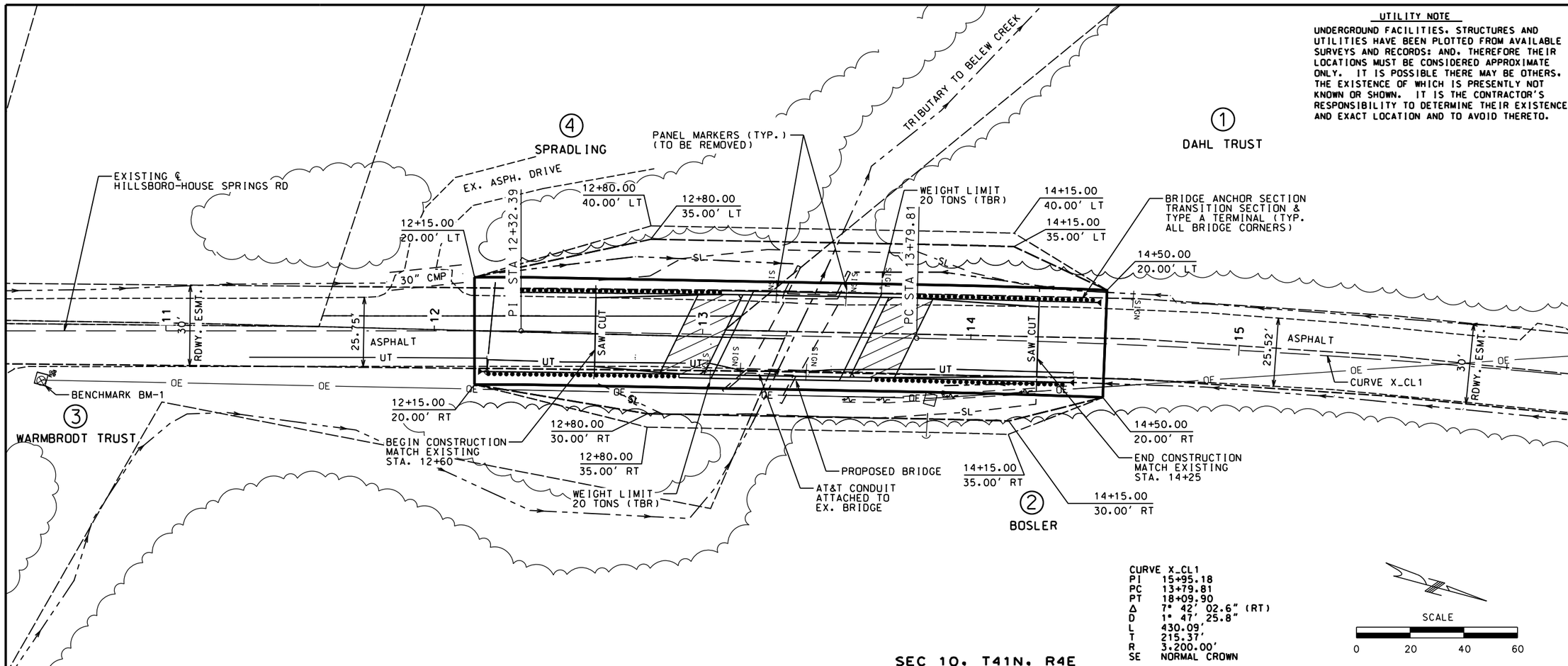

CURVE X_CL1
PI 15+95.18
PC 13+79.81
PT 18+09.90
Δ 7° 42' 02.6" (RT)
D 1° 47' 25.8"
L 430.09'
T 215.37'
R 3,200.00'
SE NORMAL CROWN

SEC 10, T41N, R4E

EXISTING BRIDGE
18' CLEAR BETWEEN CLOSED ABUTMENTS
26' WIDE (TO BE REMOVED)

PROPOSED BRIDGE
50' CONCRETE I GIRDER
30' FACE TO FACE OF BARRIER
ON SPILL THRU END BENTS

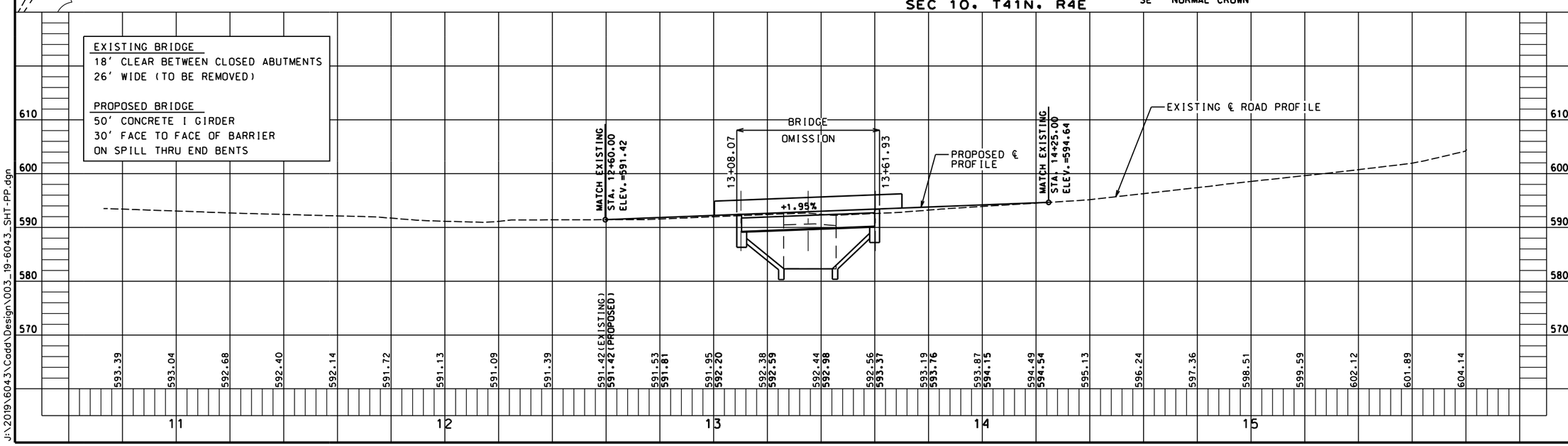

UTILITY NOTE

UNDERGROUND FACILITIES, STRUCTURES AND UTILITIES HAVE BEEN PLOTTED FROM AVAILABLE SURVEYS AND RECORDS; AND, THEREFORE THEIR LOCATIONS MUST BE CONSIDERED APPROXIMATE ONLY. IT IS POSSIBLE THERE MAY BE OTHERS. THE EXISTENCE OF WHICH IS PRESENTLY NOT KNOWN OR SHOWN. IT IS THE CONTRACTOR'S RESPONSIBILITY TO DETERMINE THEIR EXISTENCE AND EXACT LOCATION AND TO AVOID THERETO.

STATE OF MISSOURI
STEPHEN ALSBURY
NUMBER E-24688
REGISTERED PROFESSIONAL ENGINEER

DATE PREPARED	
12/12/2019	
STATE	SHEET NO.
MO	3
ROUTE	
H-HOUSESPRINGS	
COUNTY	
JEFFERSON	
JOB NO.	
19-6043	
PROJECT NO.	
.	
BRIDGE NO.	

DATE	DESCRIPTION
.	.
.	.
.	.
.	.
.	.
.	.
.	.

IF A SEAL IS PRESENT ON THIS SHEET IT HAS BEEN ELECTRONICALLY SEALED AND DATED.

JEFFERSON COUNTY PUBLIC WORKS DEPARTMENT
P.O. BOX 100
HILLSBORO, MO 63050
(636-797-5340) PHONE
(636-797-5565) FAX

ABNA
4140 LINDELL BOULEVARD
ST. LOUIS, MO 63108
PH. 314-454-0222
CERTIFICATE/LICENSE NO. 001501

J:\2019\6043\Cadd\Design\003_19-6043_SHT-PP.dgn

RIGHT-OF-WAY PLAT

HILLSBORO-HOUSE SPRINGS ROAD
OVER TRIBUTARY TO BELEW CREEK
SECTION 10, T 41 N, R 4 E
JEFFERSON COUNTY, MISSOURI

PARCEL DATA - HILLSBORO - HOUSE SPRINGS ROAD OVER TRIBUTARY TO BELEW CREEK									
TRACT NO.	PARCEL ID	OWNER	EXIST. AREA ACRES	TOTAL R.O.W. SQ. FT.	R.O.W. IN EXIST. ESMNT. SQ. FT.	NEW R.O.W. REQD. SQ. FT.	REMAINING AREA ACRES	NEW PDE SQ. FT.	NEW TCE SQ. FT.
1	12-2.0-10.0-0-000-006.01	DAHL, KENNETH & DOROTHY TRUST	28.24	2414	1999	415	28.23	1416	414
2	12-2.0-10.0-0-000-005	BOSLER, GARY R. & LEONA J.	16.95	2651	1820	831	16.93	1116	572
3	12-2.0-10.0-0-000-004.04	WARMBRODT, JOHN M. TRUST	53.24	2154	1481	673	53.22	737	349
4	12-2.0-10.0-0-000-017	SPRADLING, DANIEL S. & SCHMALTZ, JESSICA M.	2.25	1482	1054	428	2.24	1359	514

LINE AND CURVE DIMENSIONS

(A) R=3235.00' L=35.58' C=35.58' CB=S 13° 39' 54" E
(B) S 81° 33' 32" E 3.01'
(C) N 13° 49' 5" W 23.47'
(D) S 54° 26' 29" E 8.15'
(E) N 15° 3' 0" W 17.57'
(F) S 15° 16' 38" W 962.73'

0 FEET 10 20
GRAPHIC SCALE

POC NW COR SEC 10
T 41 N, R 4 E FND.
12"x6"x10" STONE

POINTS-STA/OFFSETS

1 13+08.19, 1.70' LT
2 13+14.39, 6.99' LT / POB ROW TR 4

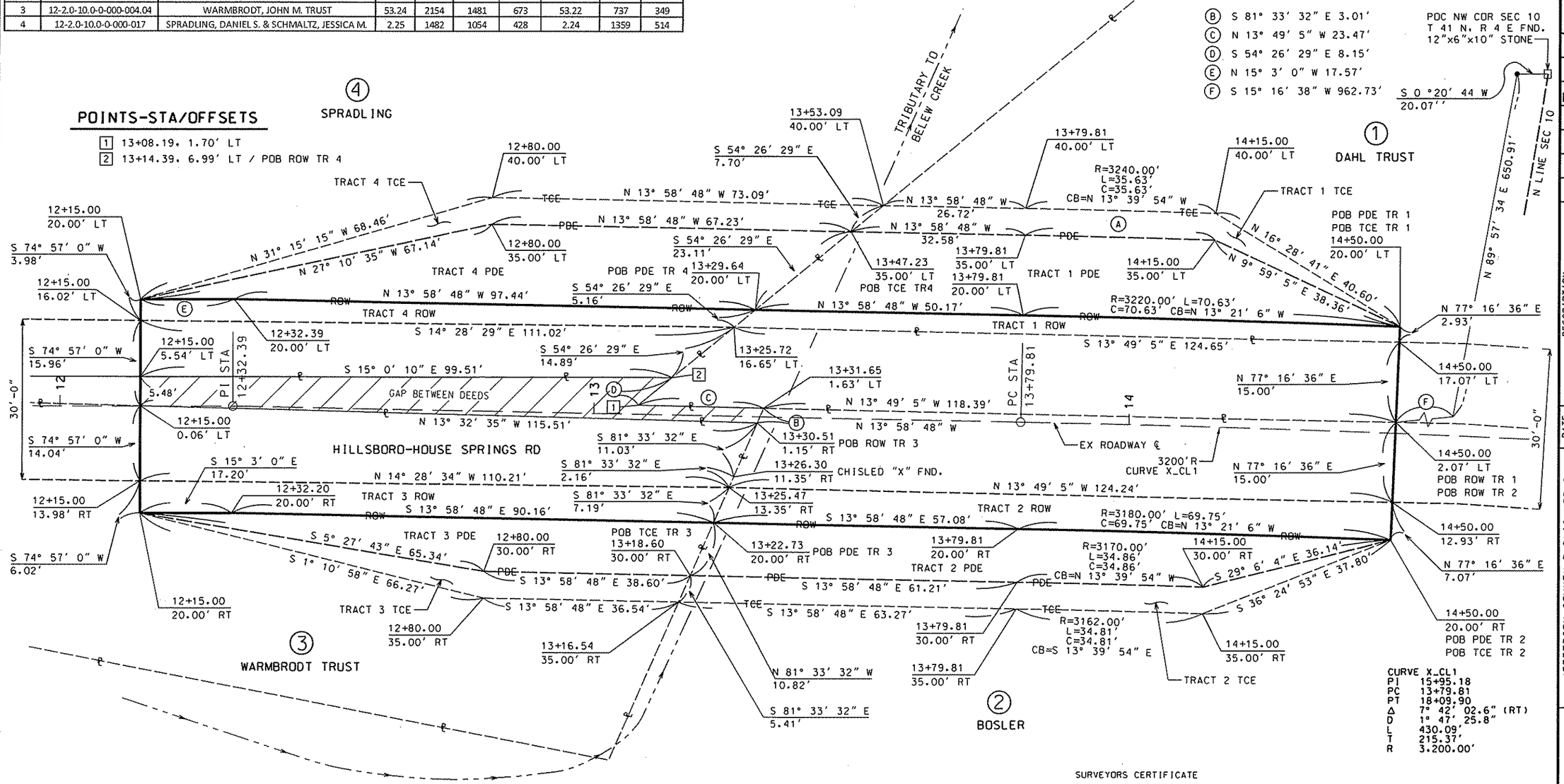

CURVE X_CL1
PI 15+95.18
PC 13+79.81
PT 18+09.90
Δ 7° 42' 02.6" (RT)
D 1° 47' 25.8"
L 430.09'
T 215.37'
R 3,200.00'

SURVEYORS CERTIFICATE

THIS IS TO CERTIFY THAT AT THE REQUEST OF JEFFERSON COUNTY MISSOURI, WE HAVE DURING THE MONTH OF NOVEMBER 2019 PREPARED THIS RIGHT OF WAY PLAT FROM BOUNDARY INFORMATION IN SECTION 10, TOWNSHIP 41 NORTH, RANGE 4 EAST AND SECTION 30, TOWNSHIP 39 NORTH, RANGE 6 EAST IN JEFFERSON COUNTY, MISSOURI.

THAT THE RESULTS OF SAID SURVEY ARE AS SHOWN HEREON AND ARE IN ACCORDANCE WITH THE CURRENT "MISSOURI MINIMUM STANDARDS FOR PROPERTY BOUNDARY SURVEYS".

Donald W. Diehl 12-12-2019
DONALD W. DIEHL — DATE
MO. PLS 2010018901
ABNA ENGINEERING INCORPORATED L.S # 365D
4140 LINDELL BOULEVARD
ST. LOUIS, MISSOURI 63108
314-454-0222.

STATE OF MISSOURI — DONALD W. DIEHL — PLS NUMBER 2010018901 — PROFESSIONAL LAND SURVEYOR

LEGEND

- FOUND IRON PIN
- SET 5/8" IRON PIN
- FOUND MONUMENT
- FOUND RIGHT-OF WAY MONUMENT
- CHISELED CROSS
- FOUND STONE
- EXISTING ℄ OF ROADWAY
- ROW — NEW BOUNDARY LINE
- PDE — NEW PERMANENT DRAINAGE EASEMENT LINE
- TCE — NEW TEMPORARY CONSTRUCTION EASEMENT LINE
- SECTION LINE
- ℄ — EXISTING PROPERTY LINE
- EXISTING ROADWAY EASEMENT LINE

NOTES
1. IT IS NOT WARRANTED THAT ANY/ALL EXISTING EASEMENTS ARE AS SHOWN. ADDITIONAL EASEMENTS MAY EXIST.
2. BASIS OF BEARING IS MISSOURI STATE PLANE GRID AND WAS CALCULATED FROM STATIC GPS OBSERVATIONS MADE BEFORE NOTICE TO PROCEED.
3. CLASS OF SURVEY: URBAN PROPERTY.
4. ALL EXISTING MONUMENTS FOUND ARE NOTED AS TO TYPE.
5. RIGHT-OF-WAY MONUMENTS TO BE SET AT COMPLETION OF CONSTRUCTION.

DATE PREPARED 12/12/2019
STATE MO — SHEET NO. 4
ROUTE H-HOUSESPRINGS
COUNTY JEFFERSON
JOB NO. 19-6043
PROJECT NO.
BRIDGE NO.

DESCRIPTION | DATE

JEFFERSON COUNTY PUBLIC WORKS DEPARTMENT
P.O. BOX 100
HILLSBORO, MO 63050
(636-797-5340) PHONE
(636-797-5565) FAX

ABNA
4140 LINDELL BOULEVARD
ST. LOUIS, MO 63108
PH. 314-454-0222
CERTIFICATE/LICENSE NO. 001501

J:\2019\6043\Codd\Design\004_19-6043_SHT_PLAT.dgn 1:34:48 PM 12/12/2019

HILLSBORO-HOUSE SPRINGS ROAD LAYOUT COORDINATE TABLE		
Point Description	North	East
Control Point TPK-6002	900301.5023	800570.8701
Control Point TPR-6003	900128.0286	800585.2841
Control Point TPR-6004	899992.8591	800622.9341
HILLSBORO-HOUSE SPRINGS ROAD ℄		
POT STA. 10+00.00	899986.419	800645.512
PI STA. 12+32.39	900210.834	800585.170
PC STA. 13+79.81	900353.890	800549.555
PI STA. 15+95.18	900562.880	800497.525
PT STA. 18+09.90	900776.956	800473.969
POT STA. 19+38.53	900904.816	800459.899

STATE PLANE COORDINATE SYSTEM

STATEMENT OF STATE PLANE COORDINATE

THIS SITE WAS TIED TO MODOT CONTINUALLY OPERATING REFERENCE STATION MOSI USING TRIMBLE GPS RECEIVERS EMPLOYING REAL TIME CORRECTIONAL METHODS TIED TO THE MODOT VRS SYSTEM ON AUGUST 7, 2019. TO THE BEST OF OUR KNOWLEDGE, THE CALCULATED STATE PLANE COORDINATES MEET THE ACCURACY SURVEYS AS AN "URBAN PROPERTY" RELATIVE TO THE ABOVE STATION.

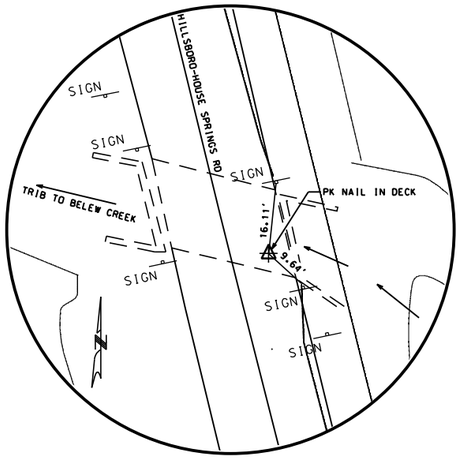

TPK-6002

STA. 13+23.82, 8.03' RT.

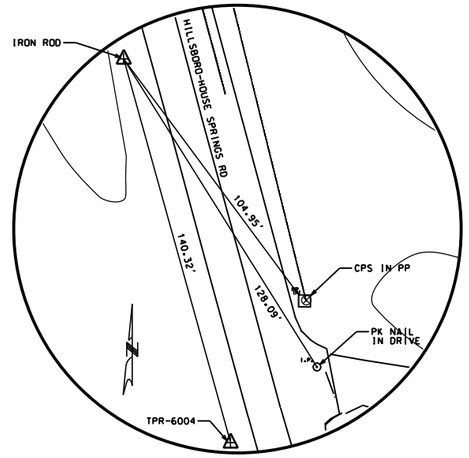

TPR-6003

STA. 11+52.39, 21.69' LT.

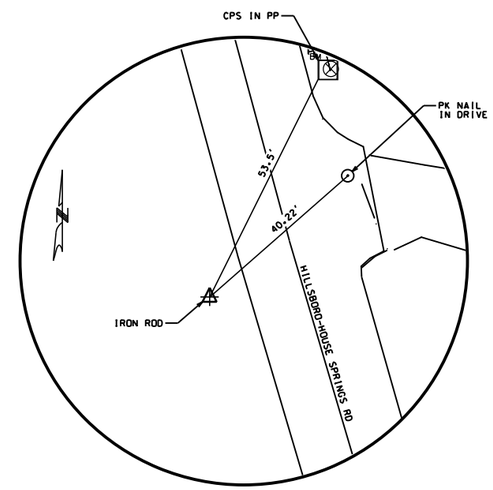

TPR-6004

STA. 10+12.08, 20.13' LT.

Detailed Oct 2019
Checked Oct 2019

Note: This drawing is not to scale. Follow dimensions.

COORDINATE POINTS

STATE OF MISSOURI
STEPHEN ALSBURY
NUMBER E-24698
REGISTERED PROFESSIONAL ENGINEER

DATE PREPARED 12/12/2019
STATE MO
SHEET NO. 5
ROUTE H-HOUSESPRINGS
COUNTY JEFFERSON
JOB NO. 19-6043
PROJECT NO. .
BRIDGE NO. .

DATE	DESCRIPTION
.	.
.	.
.	.
.	.
.	.
.	.
.	.

IF A SEAL IS PRESENT ON THIS SHEET IT HAS BEEN ELECTRONICALLY SEALED AND DATED.

JEFFERSON COUNTY PUBLIC WORKS DEPARTMENT
P.O. BOX 100
HILLSBORO, MO 63050
(636-797-5340) PHONE
(636-797-5565) FAX

ABNA
4140 LINDELL BOULEVARD
ST. LOUIS, MO 63108
PH. 314-454-0222
CERTIFICATE/LICENSE NO. 001501

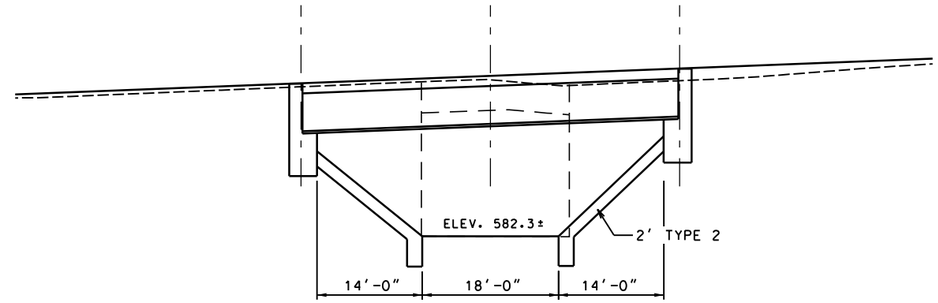

TYPICAL SECTION

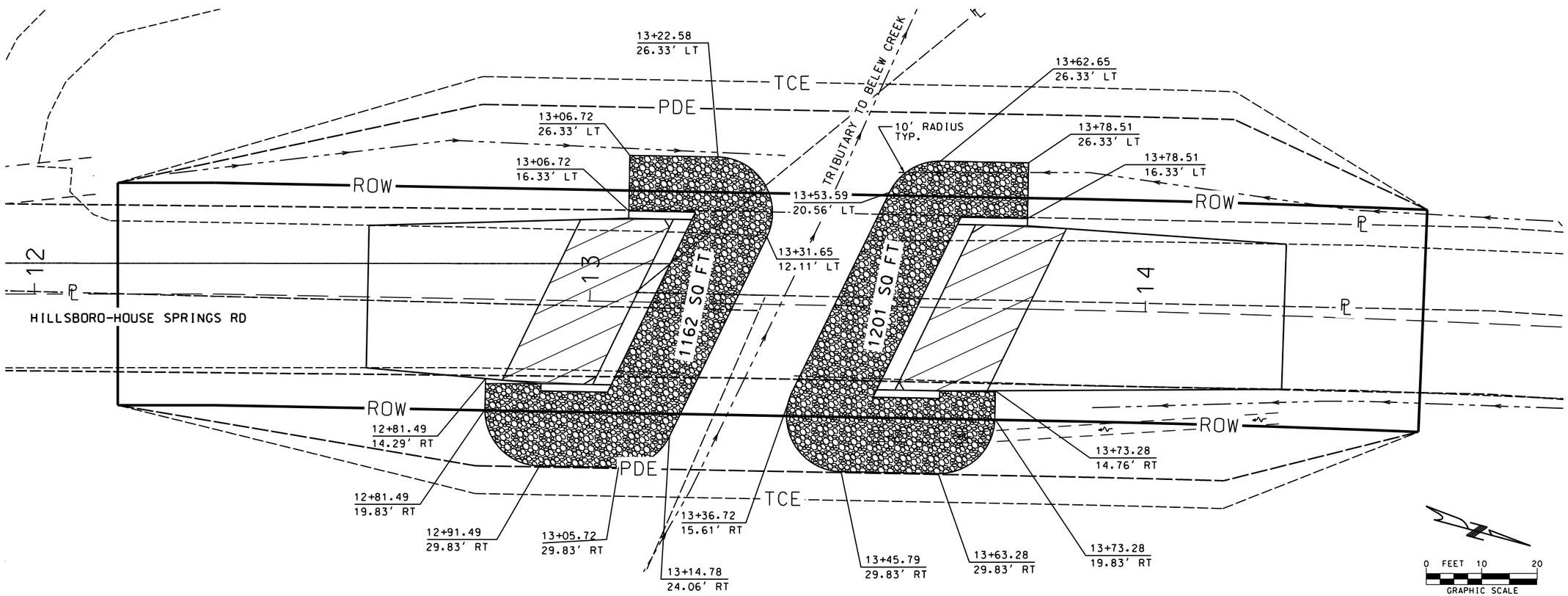

LAYOUT PLAN

SPECIAL SHEET
(TYPE 2 ROCK BLANKET)

Detailed Oct 2019
Checked Oct 2019

STATE OF MISSOURI
STEPHEN ALSBURY
NUMBER E-24698
REGISTERED PROFESSIONAL ENGINEER

DATE PREPARED	12/12/2019
STATE	MO
SHEET NO.	6
ROUTE	H-HOUSESPRINGS
COUNTY	JEFFERSON
JOB NO.	19-6043
PROJECT NO.	.
BRIDGE NO.	.

DATE	DESCRIPTION
.	.

IF A SEAL IS PRESENT ON THIS SHEET IT HAS BEEN ELECTRONICALLY SEALED AND DATED.

JEFFERSON COUNTY PUBLIC WORKS DEPARTMENT
P.O. BOX 100
HILLSBORO, MO 63050
(636-797-5340) PHONE
(636-797-5565) FAX

ABNA
4140 LINDELL BOULEVARD
ST. LOUIS, MO 63108
PH. 314-454-0222
CERTIFICATE/LICENSE NO. 001501

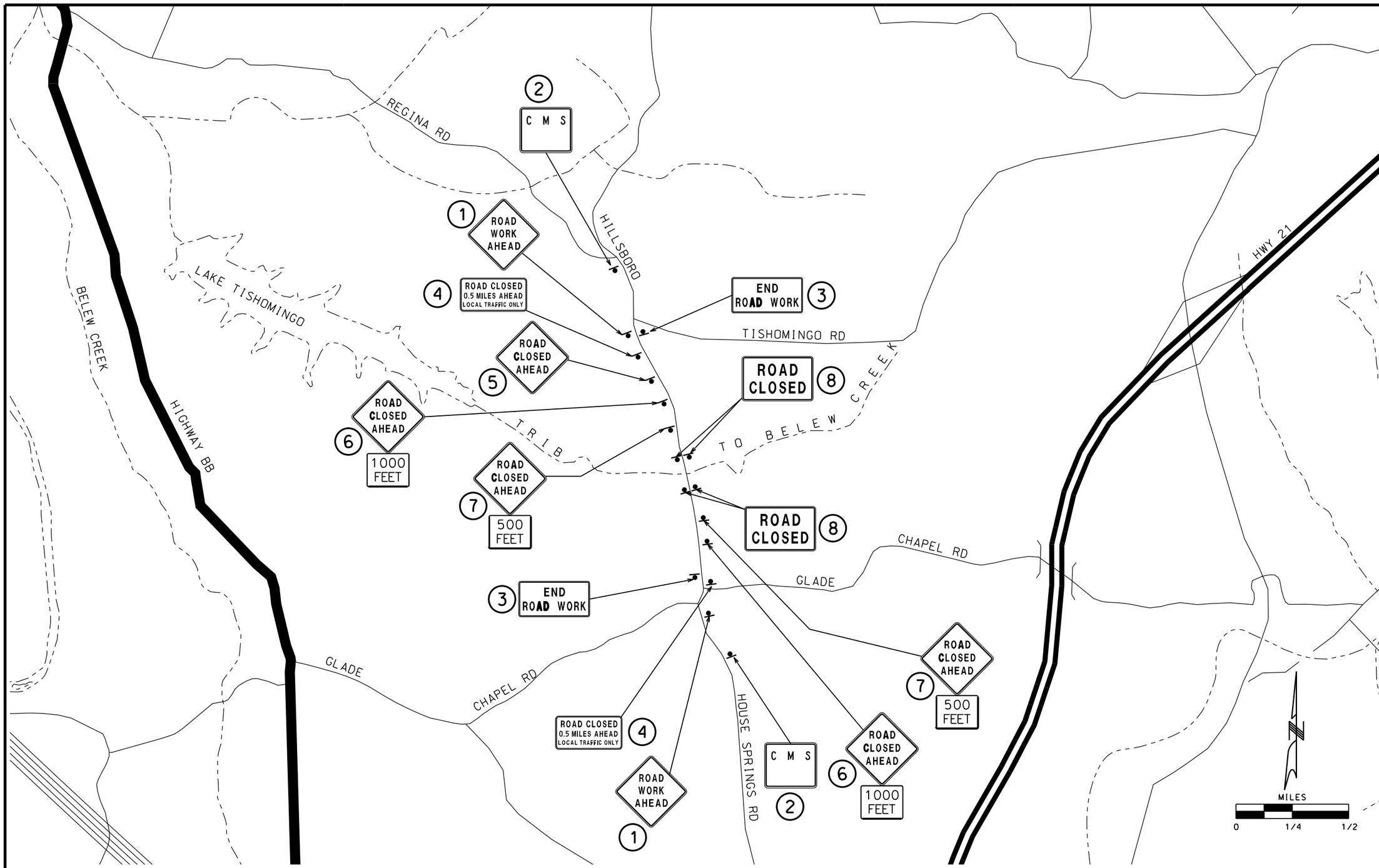

TRAFFIC CONTROL (ROAD CLOSED)

NOTE:
ACCESS TO ADJACENT PROPERTIES
SHALL BE MAINTAINED DURING CONSTRUCTION

Detailed Oct 2019
Checked Oct 2019

STATE OF MISSOURI
STEPHEN ALSBURY
NUMBER E-24698
REGISTERED PROFESSIONAL ENGINEER

DATE PREPARED	12/12/2019
STATE	MO
SHEET NO.	7
ROUTE	H-HOUSESPRINGS
COUNTY	JEFFERSON
JOB NO.	19-6043
PROJECT NO.	.
BRIDGE NO.	.

DATE	DESCRIPTION
.	.
.	.
.	.
.	.
.	.
.	.
.	.

IF A SEAL IS PRESENT ON THIS SHEET IT HAS BEEN ELECTRONICALLY SEALED AND DATED.

JEFFERSON COUNTY PUBLIC WORKS DEPARTMENT
P.O. BOX 100
HILLSBORO, MO 63050
(636-797-5340) PHONE
(636-797-5565) FAX

ABNA
4140 LINDELL BOULEVARD
ST. LOUIS, MO 63108
PH. 314-454-0222
CERTIFICATE/LICENSE NO. 001501

J:\2019\6043\Cadd\Design\007_19-6043_SHT_Detour01.dgn 6:55:18 AM 12/12/2019

W020-1

1

2-REQUIRED

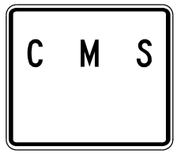

CHANGABLE
MESSAGE
SIGN
W/O INTERFACE

2

2-REQUIRED

G020-2

3

2-REQUIRED

MOUNT ROAD CLOSED
LOCAL TRAFFIC ONLY
SIGNS WITH TYPE B
WARNING LIGHTS
ON BARRICADES (TYP.)

R11-3a

4

2-REQUIRED

W020-3

5

2-REQUIRED

W020-3

W016-2

6

2-REQUIRED

W020-3

W016-2

7

2-REQUIRED

R11-2

8

4-REQUIRED

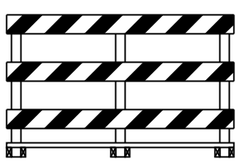

TYPE III
MOVEABLE BARRICADE

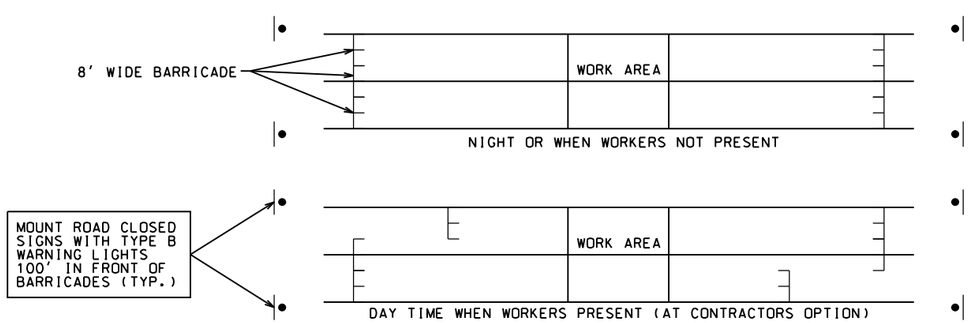

BARRICADE PLACEMENT

NOTES:

1. ALL CONSTRUCTION SIGNS SHALL BE NON-PORTABLE MOUNTED 48 HOURS PRIOR TO ROAD CLOSURE.
2. TYPE III BARRICADES SHALL EXTEND FROM SHOULDER TO SHOULDER.
3. CONTRACTOR IS RESPONSIBLE FOR UTILITY LOCATES PRIOR TO PLACING SIGN POSTS.

Detailed Oct 2019
Checked Oct 2019

Note: This drawing is not to scale. Follow dimensions.

TRAFFIC CONTROL (SIGNS)

STATE OF MISSOURI
STEPHEN ALSBURY
NUMBER E-24698
REGISTERED PROFESSIONAL ENGINEER

DATE PREPARED	12/12/2019
STATE	MO
SHEET NO.	8
ROUTE	H-HOUSESPRINGS
COUNTY	JEFFERSON
JOB NO.	19-6043
PROJECT NO.	.
BRIDGE NO.	.

DATE	DESCRIPTION
.	.
.	.
.	.
.	.
.	.
.	.
.	.

JEFFERSON COUNTY PUBLIC WORKS
DEPARTMENT
P.O. BOX 100
HILLSBORO, MO 63050
(636-797-5340) PHONE
(636-797-5565) FAX

ABNA
4140 LINDELL BOULEVARD
ST. LOUIS, MO 63108
PH. 314-454-0222
CERTIFICATE/LICENSE NO. 001501

IF A SEAL IS PRESENT ON THIS SHEET IT HAS BEEN ELECTRONICALLY SEALED AND DATED.

J:\2019\6043\Cadd\Design\008_19-6043_SHT_Detour02.dgn 6:56:35 AM 12/12/2019

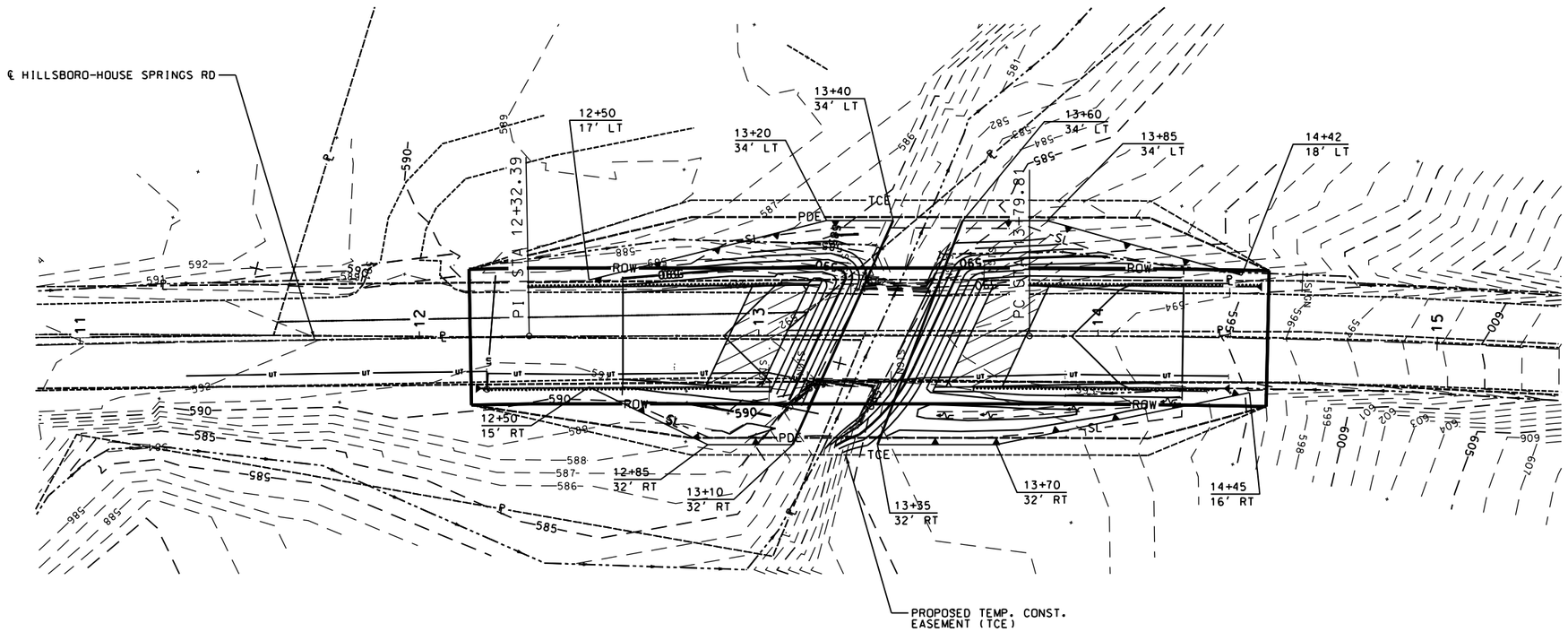

SILT FENCE	
LOCATION	LIN. FT.
15' RT. STA. 12+50 TO 32' RT. STA. 13+10 32' RT. STA. 13+35 TO 16' RT. STA. 14+45	64 112
17' LT. STA. 12+50 TO 34' LT. STA. 13+40 34' LT. STA. 13+60 TO 18' LT. STA. 14+42	92 85
TOTAL	353

TYPE C BERM	
LOCATION	LIN. FT.
32' RT. STA. 13+10 TO 34' LT. STA. 13+40 32' RT. STA. 13+35 TO 34' LT. STA. 13+60	72 72
TOTAL	144

0 FEET 20 40
GRAPHIC SCALE

LEGEND

SILT FENCE

TYPE C BERM

EROSION CONTROL

Detailed Oct 2019
Checked Oct 2019

STATE OF MISSOURI
STEPHEN ALSBURY
NUMBER E-24698
REGISTERED PROFESSIONAL ENGINEER

DATE PREPARED 12/12/2019

STATE MO | SHEET NO. 9

ROUTE H-HOUSESPRINGS

COUNTY JEFFERSON

JOB NO. 19-6043

PROJECT NO. .

BRIDGE NO. .

DATE	DESCRIPTION
.	.
.	.
.	.
.	.
.	.
.	.

IF A SEAL IS PRESENT ON THIS SHEET IT HAS BEEN ELECTRONICALLY SEALED AND DATED.

JEFFERSON COUNTY PUBLIC WORKS
DEPARTMENT
P.O. BOX 100
HILLSBORO, MO 63050
(636-797-5340) PHONE
(636-797-5565) FAX

ABNA
4140 LINDELL BOULEVARD
ST. LOUIS, MO 63108
PH. 314-454-0222
CERTIFICATE/LICENSE NO. 001501

(51') PRESTRESSED CONCRETE GIRDER SPAN

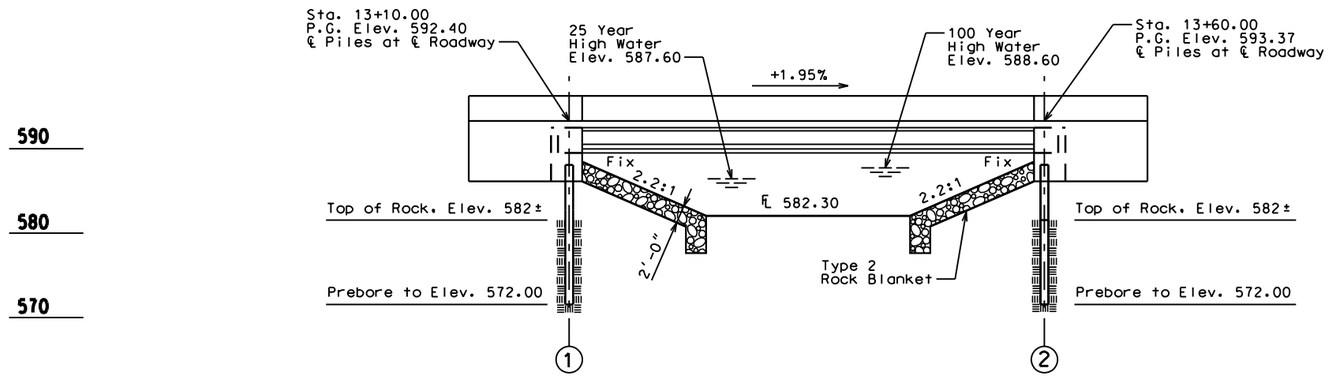

GENERAL ELEVATION

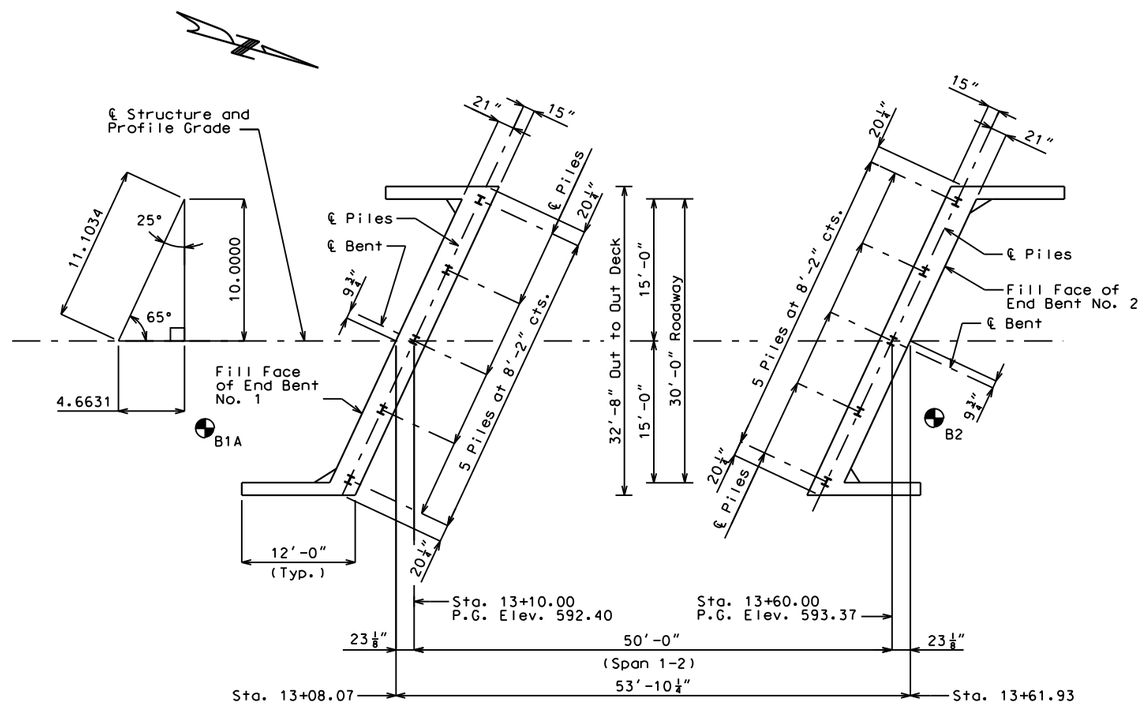

PLAN

"⊕" Indicates location of borings.

Notice and Disclaimer Regarding Boring Log Data

The locations of all subsurface borings for this structure are shown on the bridge plan sheet for this structure. Boring data for the numbered locations is shown on Sheet No. 22. The boring data for all locations indicated, as well as any other boring logs or other factual records of subsurface data and investigations performed by the County for the design of the project, will be provided in the bridge electronic deliverable file or will be available from the Project Contact upon written request. No greater significance or weight should be given to the boring data depicted on the plan sheets than is subsurface data available from the County or elsewhere.

The County does not represent or warrant that any such boring data accurately depicts the conditions to be encountered in constructing this project. A contractor assumes all risks it may encounter in basing its bid prices, time or schedule of performance on the boring data depicted here or those available from the district, or on any other documentation not expressly warranted, which the contractor may obtain from the County.

Notes:

Fill prebore holes with sand per 702.4.3.1 prior to pile placement.

Roadway fill shall be completed to the final roadway section and up to the elevation of the bottom of the concrete beam within the limits of the structure and for not less than 25 feet in back of the fill face of the end bents before any piles are driven for any bents falling within the embankment section.

Dimensions shown in plan are horizontal.

BM-1 - CPS in Power Pole East of Hillsboro-House Springs Road and South of Bridge.
Station 10+53.60, 18.68' Rt.
Elevation 594.39

BRIDGE: OVER TRIBUTARY TO BELEW CREEK

COUNTY ROAD: HILLSBORO-HOUSE SPRINGS RD

STA. 13+08.07

Detailed Oct 2019
Checked Oct 2019

Note: This drawing is not to scale. Follow dimensions.

STATE OF MISSOURI
STEPHEN ALSBURY
NUMBER E-24698
REGISTERED PROFESSIONAL ENGINEER

DATE PREPARED	
12/12/2019	
STATE	SHEET NO.
MO	1-0
ROUTE	
H-HOUSESPRINGS	
COUNTY	
JEFFERSON	
JOB NO.	
19-6043	
PROJECT NO.	
.	
BRIDGE NO.	
.	

DATE	DESCRIPTION
.	.
.	.
.	.
.	.
.	.
.	.
.	.

IF A SEAL IS PRESENT ON THIS SHEET IT HAS BEEN ELECTRONICALLY SEALED AND DATED.

JEFFERSON COUNTY PUBLIC WORKS DEPARTMENT
P.O. BOX 100
HILLSBORO, MO 63050
(636-797-5340) PHONE
(636-797-5565) FAX

ABNA
4140 LINDELL BOULEVARD
ST. LOUIS, MO 63108
PH. 314-454-0222
CERTIFICATE/LICENSE NO. 001501

Estimated Quantities

Item		Substr.	Superstr.	Total
Class 1 Excavation	cu. yard	160		160
Removal of Bridges	lump sum			1
Bridge Approach Slab (Minor Road)	sq. yard		138	138
Galvanized Structural Steel Piles (10 in.)	linear foot	165		165
Pre-Bore for Piling	linear foot	147		147
Pile Point reinforcement	each	10		10
Class B Concrete (Substructure)	cu. yard	29.2		29.2
Slab on Concrete I-Girder	sq. yard		192	192
* Safety Barrier Curb	linear foot		143	143
Type 2 (32") Prestressed Concrete I-Girder	linear foot		255	255
Steel Intermediate Diaphragm for P/S Concrete Girders	each		4	4
Vertical Drain at End Bents	each	2		2
Laminated (Tapered) Neoprene Bearing Pad	each		10	10

All concrete above the construction joint in the end bents is included in the Estimated Quantities for Slab on Concrete I-Girder.

All reinforcement in the end bents is included in the Estimated Quantities for Slab on Concrete I-Girder.

Cost of L4x4x$\frac{3}{8}$ Pile Anchors (ASTM A709 Grade A36) and $\frac{3}{4}$" dia. ASTM F3125 Grade A325 bolts, complete in place, will be considered completely covered by the contract unit price for Galvanized Structural Steel Piles (10 in.).

* Safety barrier curb shall be cast-in-place option or slip-form option.

Estimated Quantities for Slab on Concrete I-Girder

Item		Total
Class B-2 Concrete (Slab on Concrete I-Girder)	cu. yard	63.4
Reinforcing Steel (Bridges)	pound	6720
Reinforcing Steel (Epoxy Coated)	pound	9790

The table of Estimated Quantities for Slab on Concrete I-Girder represents the quantities used by the County in preparing the cost estimate for concrete slabs. The area of the concrete slab will be measured to the nearest square yard with the horizontal dimensions as shown on the plan of slab. Payment for prestressed panels, conventional forms, all concrete and coated and uncoated reinforcing steel will be considered completely covered by the contract unit price for the slab. Variations may be encountered in the estimated quantities but the variations cannot be used for an adjustment in the contract unit price.

Method of forming the slab shall be as shown on the plans and in accordance with Sec 703. All hardware for forming the slab to be left in place as a permanent part of the structure shall be coated in accordance with ASTM A123 or ASTM B633 with a thickness class SC 4 and a finish type I, II or III.

The Estimated Quantities for Slab on Concrete I-Girder are based on skewed precast prestressed end panels.

The prestressed panel quantities are not included in the table of Estimated Quantities for Slab on Concrete I-Girder.

Class B-2 Concrete quantity is based on minimum top flange thickness.

Foundation Data

Type	Design Data		Bent No. 1	Bent No. 2
Load Bearing Pile	Pile Type and Size		HP 10x42	HP 10x42
	Number	ea	5	5
	Approximate Length per Each	ft	15	18
	Pile Point Reinforcement	ea	5	5
	Minimum Galvanized Penetration (Elev.)	ft	572	572
	Minimum Tip Penetration (Elev.)	ft	572	572
	Criteria for Minimum Tip Penetration		Minimum Embedment into Natural Ground	Minimum Embedment into Natural Ground
	Pile Driving Verification Method		DF	DF
	Design Bearing Nominal Axial Pile Compression Resistance	kip	312	312

Hydrologic Data

Drainage Area = 1.2 sq mi
Base Flood (100-year)
Base Flood Elevation = 588.68
Base Flood Discharge = 1580 cfs
Estimated Backwater = 0.0 ft
Average Velocity thru Opening = 9.1 ft/s
Freeboard (25 year)
Freeboard = 1.2 ft
Roadway Overtopping
Overtopping Flood Discharge = None cfs
Overtopping Flood Frequency = >100 years
500 Year Flood Elevation = 589.5

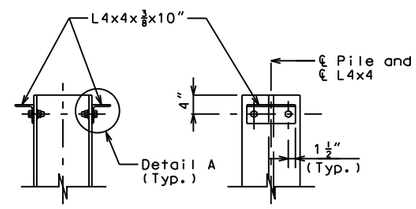

DETAIL OF HP PILE ANCHORS

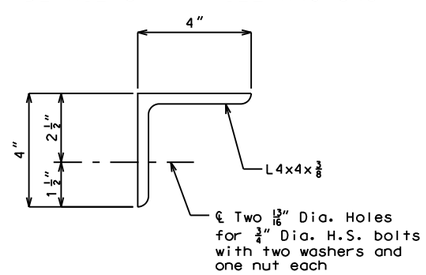

DETAIL A

Note:
Galvanizing L4x4, $\frac{3}{4}$" Diameter High Strength Bolts, Washers and Nuts shall not be required.

GENERAL NOTES:

Design Specifications:

2017 - AASHTO LRFD 8th Edition Load and Resistance Factor Design
Seismic Performance Category B

Design Earthquake Response Spectral Acceleration Coefficient at 1.0 Second Period, SD_1= 0.243
Acceleration Coefficient (Effective Peak Ground Acceleration Coefficient) A_S= .18

Design Loading:

HL-93 (LRFD Superstructure, LRFD Substructure)
35#/Sq. Ft. Future Wearing Surface
Earth 120 #/Cu. Ft., Equivalent Fluid Pressure 45#/Cu. Ft.
Superstructure: Simply-supported, non-composite for dead load. Composite for live load.

Design Unit Stresses:

Class B Concrete (Substructure)	f'c = 3,000 psi
Class B-1 Concrete (Safety Barrier Curb)	f'c = 4,000 psi
Class B-2 Concrete (Superstructure, except Prestressed Girders and Safety Barrier Curb)	f'c = 4,000 psi
Reinforcing Steel (Grade 60)	fy = 60,000 psi
Steel Pile (ASTM A709 Grade 50)	fy = 50,000 psi

For Precast Prestressed Panel Stresses, see Sheet No. 12.

For Prestressed Girder Stresses, see Sheet No. 10.

Neoprene Pads:

Laminated Neoprene Bearing Pads (Tapered) shall be 60 durometer and shall be in accordance with Sec 716.

Joint Filer

All joint filler shall be in accordance with Sec 1057 for preformed sponge rubber expansion and partition joint filler, except as noted.

Reinforcing Steel:

Minimum clearance to reinforcing steel shall be $1\frac{1}{2}$", unless otherwise shown.
All reinforcing steel shall be tied 100% at all intersections with minimum 16 guage wire.

Construction Specifications:

The 2019 Edition of the Missouri Highway and Transportation Commission, "Missouri Standard Specifications for Highway Construction" supplemental revisions and the job specifications shall govern.

Miscellaneous:

"Sec" refers to the sections in the standard and supplemental specifications unless specified otherwise.

County Construction personnel will indicate the type of joint filler option used under the precast panels for this structure:
_ Constant Joint Filler
_ Variable Joint Filler

Structure to be closed during construction. Traffic to be maintained on other routes during construction.
See roadway plans for traffic control.

GENERAL NOTES AND ESTIMATED QUANTITIES

Detailed Oct 2019
Checked Oct 2019

Note: This drawing is not to scale. Follow dimensions.

STATE OF MISSOURI
STEPHEN ALSBURY
NUMBER E-24698
REGISTERED PROFESSIONAL ENGINEER

DATE PREPARED 12/12/2019
STATE MO
SHEET NO. 1-1
ROUTE H-HOUSESPRINGS
COUNTY JEFFERSON
JOB NO. 19-6043
PROJECT NO. .
BRIDGE NO. .

DATE | DESCRIPTION

JEFFERSON COUNTY PUBLIC WORKS DEPARTMENT
P.O. BOX 100
HILLSBORO, MO 63050
(636-797-5340) PHONE
(636-797-5565) FAX

ABNA
4140 LINDELL BOULEVARD
ST. LOUIS, MO 63108
PH. 314-454-0222
CERTIFICATE/LICENSE NO. 001501

IF A SEAL IS PRESENT ON THIS SHEET IT HAS BEEN ELECTRONICALLY SEALED AND DATED.

J:\2019\6043\Cadd\Design\Bridge\19-6043_002_GeneralNotes.dgn 7:19:44 AM 12/12/2019

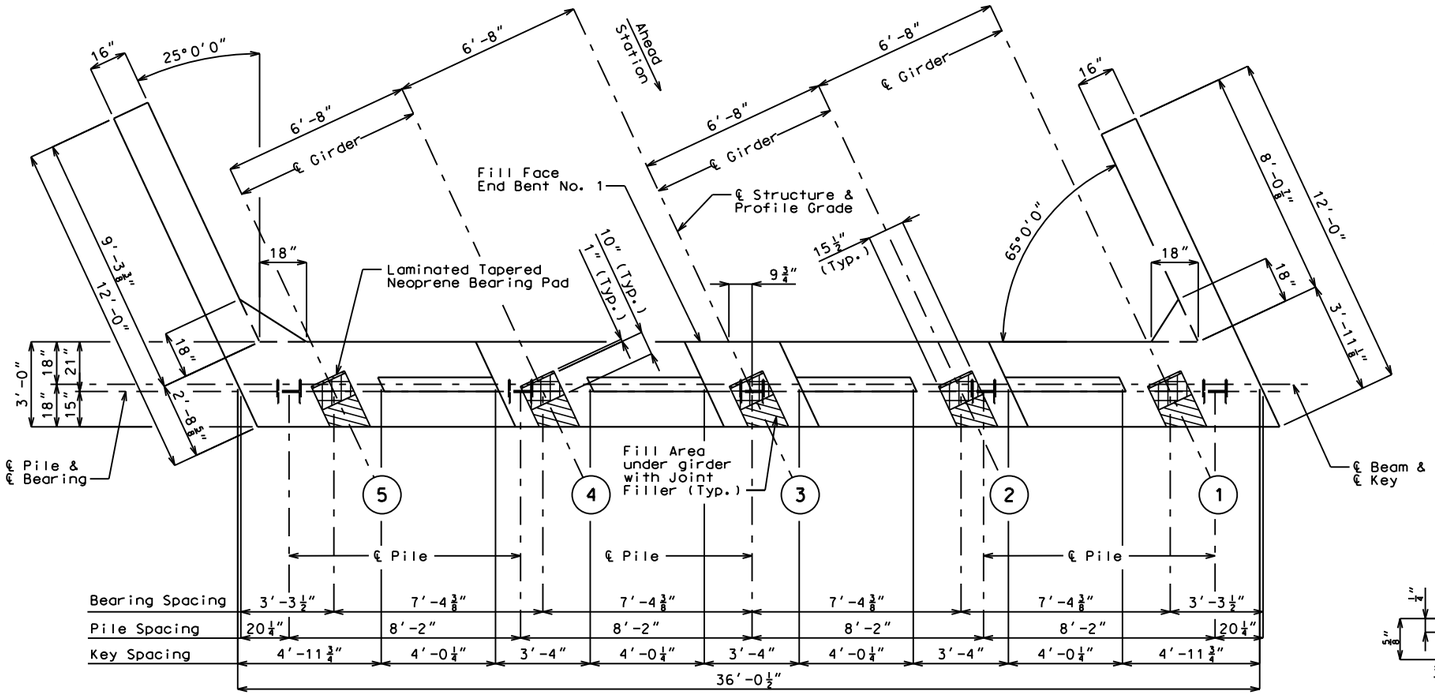

PLAN OF BEAM SHOWING DIMENSIONS

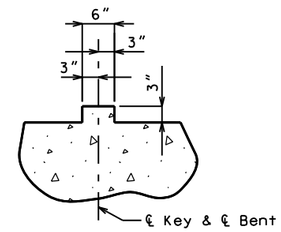

TYPICAL SECTION
THRU KEY

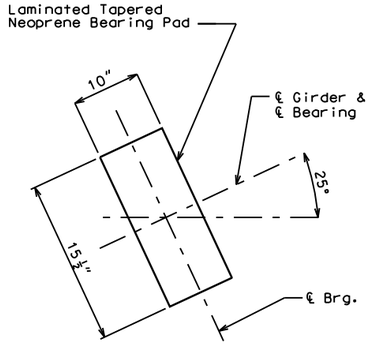

TYPICAL PLAN OF BEARINGS

5 Required

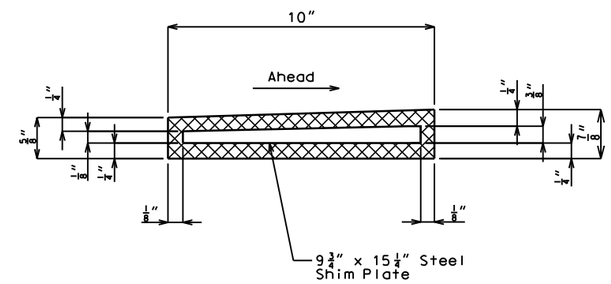

TYPICAL SECTION THRU
LAMINATED NEOPRENE
BEARING PAD

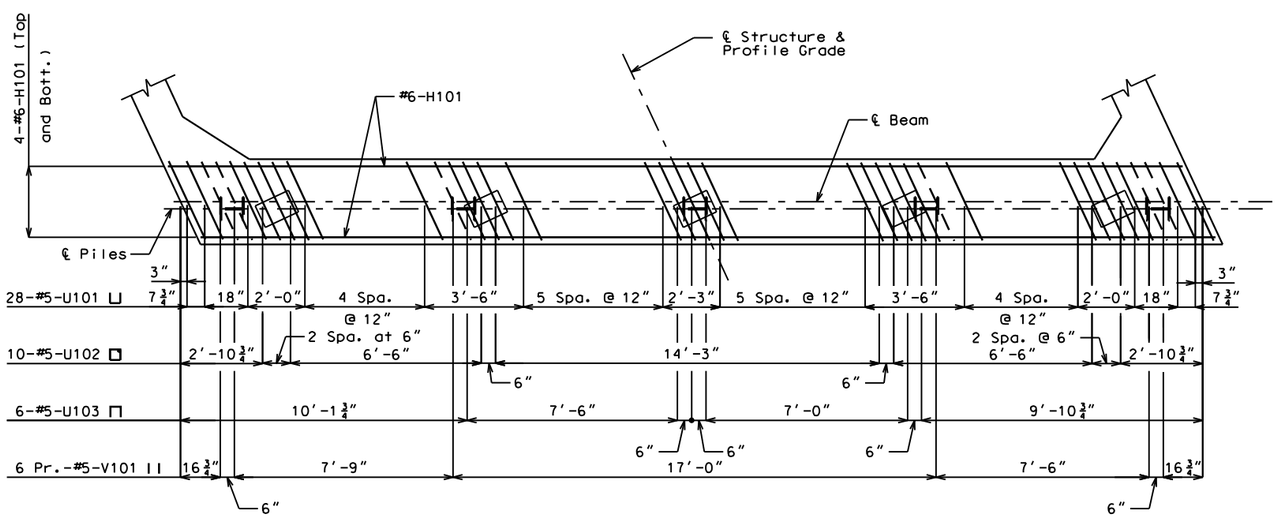

PLAN OF BEAM SHOWING REINFORCEMENT

Notes:

Work this Sheet with Sheets No. 4 and 5.

For details of Pile Anchors, see Sheet No. 2.

For details of Vertical Drain at End Bents, see Sheet No. 6.

All vertical reinforcing bars in the substructure beams or caps shall be field adjusted to clear piles by at least 1½".

All U-Bars and Pr. V-Bars in End Bent shall be placed parallel to ℄ Structure.

Substructure Quantity Table for End Bent No. 1		
Item		Quantity
Class 1 Excavation	cu. yard	80
Structural Steel Pile (10 in.)	linear foot	75
Pre-Bore For Piling	linear foot	67
Pile Point Reinforcement	each	5
Class B Concrete (substructure)	cu. yard	14.6
Vertical Drain at End Bent	each	1

PLAN DETAILS - END BENT NO. 1

Detailed Oct 2019
Checked Oct 2019

Note: This drawing is not to scale. Follow dimensions.

STATE OF MISSOURI
STEPHEN ALSBURY
NUMBER E-24698
REGISTERED PROFESSIONAL ENGINEER

DATE PREPARED 12/12/2019
STATE MO
SHEET NO. 1-2
ROUTE H-HOUSESPRINGS
COUNTY JEFFERSON
JOB NO. 19-6043
PROJECT NO. .
BRIDGE NO. .

DATE	DESCRIPTION
.	.
.	.
.	.
.	.
.	.
.	.

IF A SEAL IS PRESENT ON THIS SHEET IT HAS BEEN ELECTRONICALLY SEALED AND DATED.

JEFFERSON COUNTY PUBLIC WORKS DEPARTMENT
P.O. BOX 100
HILLSBORO, MO 63050
(636-797-5340) PHONE
(636-797-5565) FAX

ABNA
4140 LINDELL BOULEVARD
ST. LOUIS, MO 63108
PH. 314-454-0222
CERTIFICATE/LICENSE NO. 001501

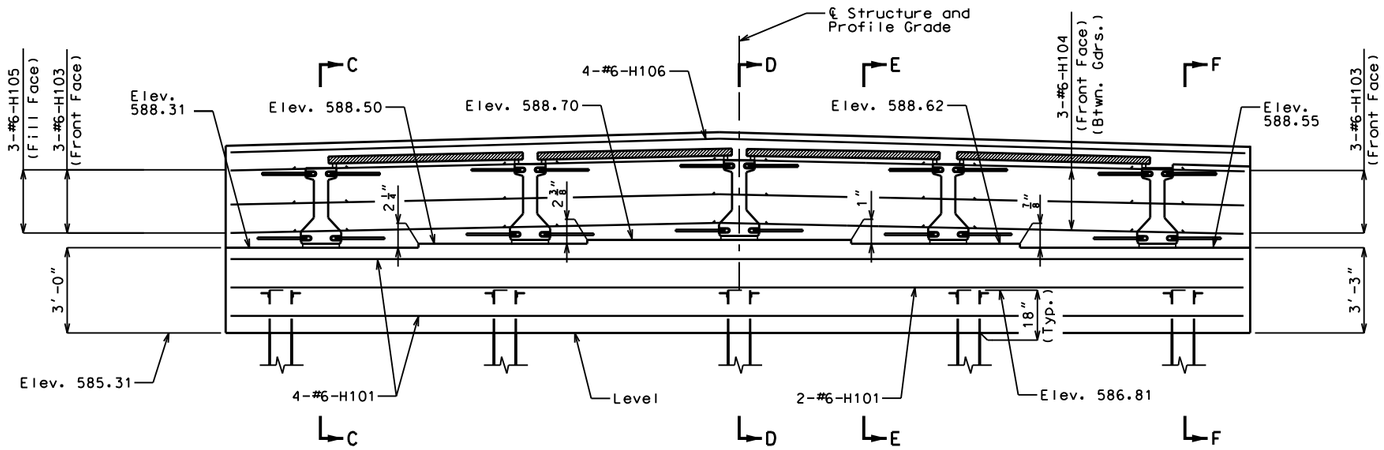

SECTION NEAR END BENT

(Looking Back Station)
Note: Construction joint key 6"x3" not shown.

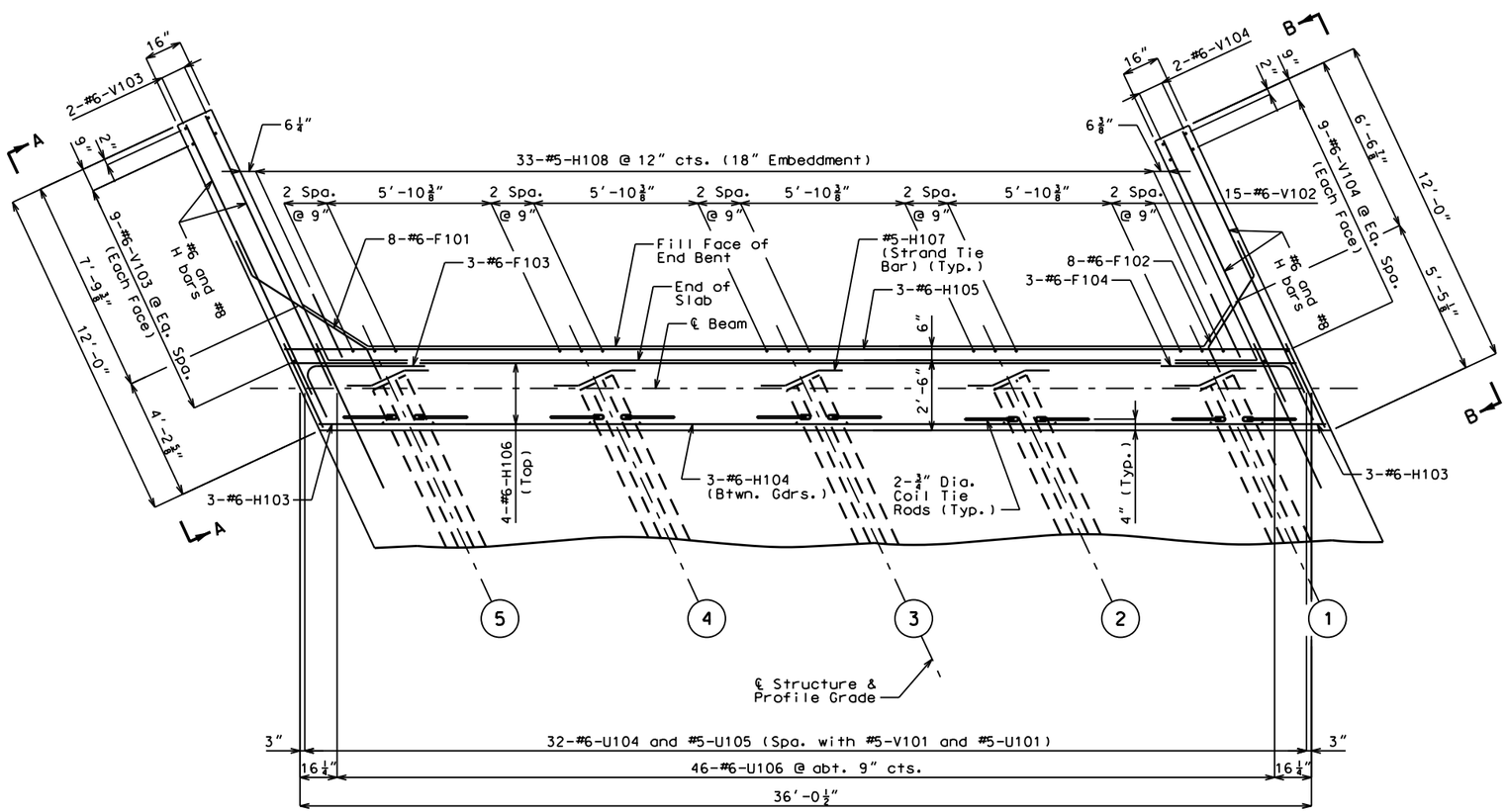

PART PLAN

DETAILS OF END BENT NO. 1

Detailed Oct 2019
Checked Oct 2019

Note: This drawing is not to scale. Follow dimensions.

Sheet No. 4 of 22

STATE OF MISSOURI
STEPHEN ALSBURY
NUMBER E-24698
REGISTERED PROFESSIONAL ENGINEER

DATE PREPARED	
12/12/2019	
STATE	SHEET NO.
MO	1·3
ROUTE	
H-HOUSESPRINGS	
COUNTY	
JEFFERSON	
JOB NO.	
19-6043	
PROJECT NO.	
·	
BRIDGE NO.	
·	

DATE	DESCRIPTION
·	·
·	·
·	·
·	·
·	·
·	·
·	·

IF A SEAL IS PRESENT ON THIS SHEET IT HAS BEEN ELECTRONICALLY SEALED AND DATED.

JEFFERSON COUNTY PUBLIC WORKS DEPARTMENT
P.O. BOX 100
HILLSBORO, MO 63050
(636-797-5340) PHONE
(636-797-5565) FAX

ABNA
4140 LINDELL BOULEVARD
ST. LOUIS, MO 63108
PH. 314-454-0222
CERTIFICATE/LICENSE NO. 001501

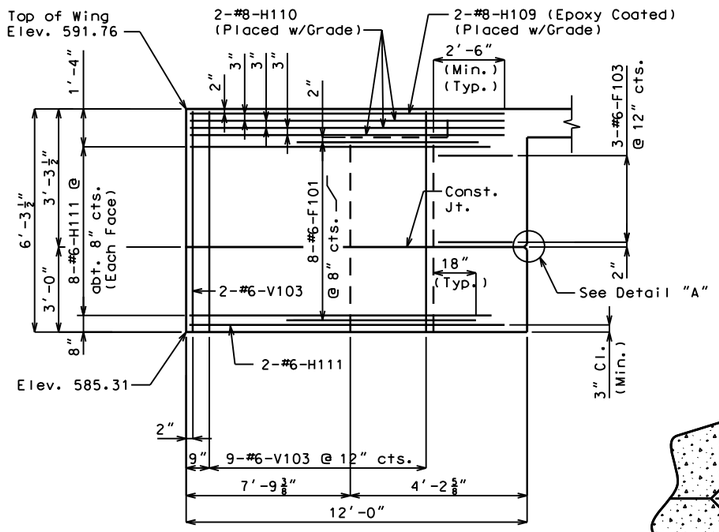

ELEVATION A-A

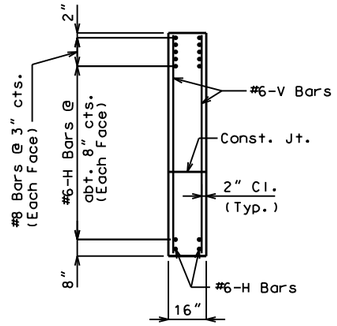

PART SECTION
THRU WING

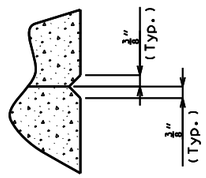

DETAIL "A"

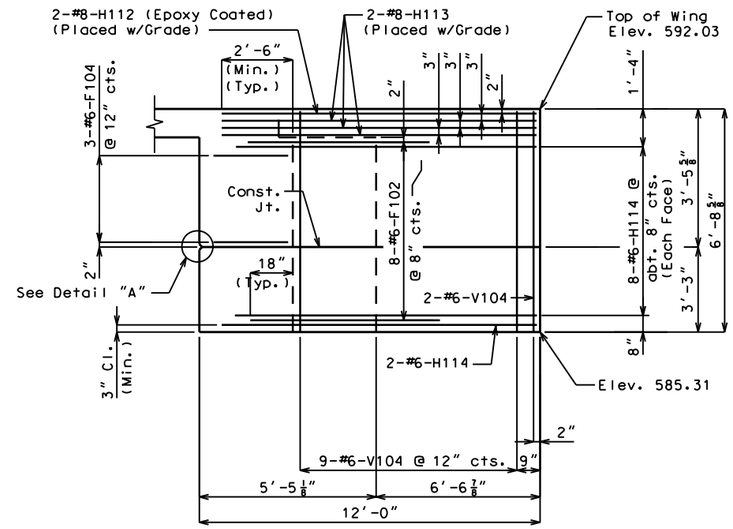

ELEVATION B-B

Notes:

Work this Sheet with Sheets No. 3 and 4.

For location of Elevations A-A, B-B and Sections C-C, D-D, E-E and F-F see Sheet No. 4.

Bend #6 F bars in field to clear girders.

All strands at end of girder shall be field bent or, if necessary, cut in field to maintain 1 1/2" minimum clearance to fill face of end bent.

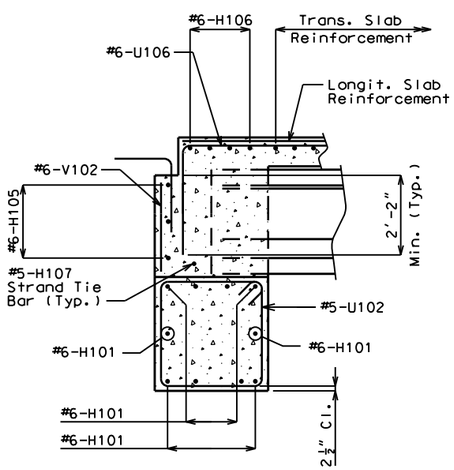

SECTION C-C

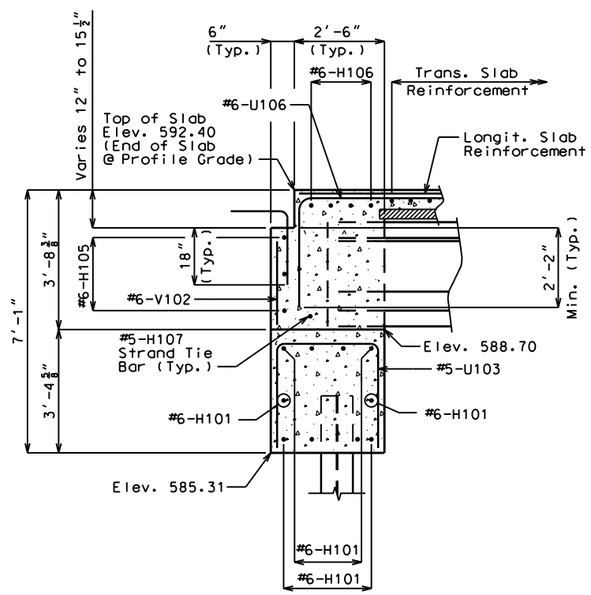

SECTION D-D

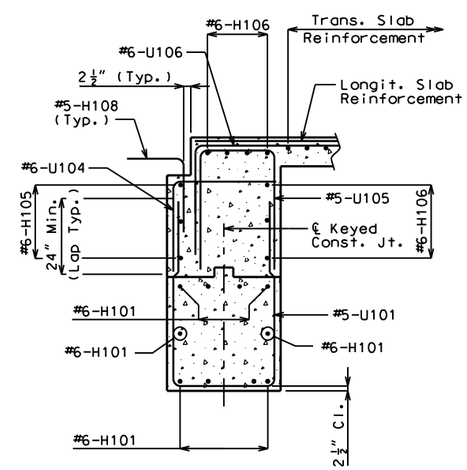

SECTION E-E

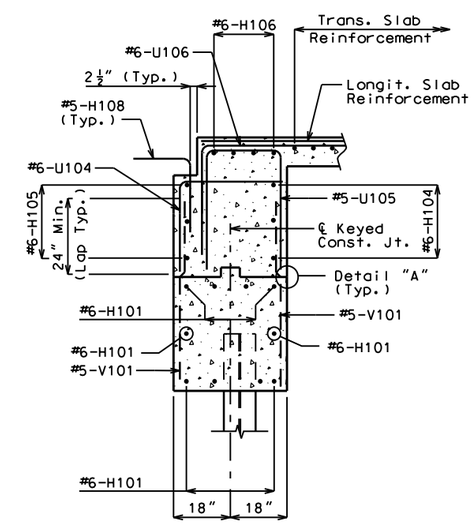

SECTION F-F

SECTIONS OF END BENT NO. 1

Detailed Oct 2019
Checked Oct 2019

Note: This drawing is not to scale. Follow dimensions.

STATE OF MISSOURI
STEPHEN ALSBURY
NUMBER E-24698
REGISTERED PROFESSIONAL ENGINEER

DATE PREPARED	
12/12/2019	
STATE	SHEET NO.
MO	1-4
ROUTE	
H-HOUSESPRINGS	
COUNTY	
JEFFERSON	
JOB NO.	
19-6043	
PROJECT NO.	
.	
BRIDGE NO.	
.	

DATE	DESCRIPTION
.	.
.	.
.	.
.	.
.	.
.	.
.	.

IF A SEAL IS PRESENT ON THIS SHEET IT HAS BEEN ELECTRONICALLY SEALED AND DATED.

JEFFERSON COUNTY PUBLIC WORKS DEPARTMENT
P.O. BOX 100
HILLSBORO, MO 63050
(636-797-5340) PHONE
(636-797-5565) FAX

ABNA
4140 LINDELL BOULEVARD
ST. LOUIS, MO 63108
PH. 314-454-0222
CERTIFICATE/LICENSE NO. 001501

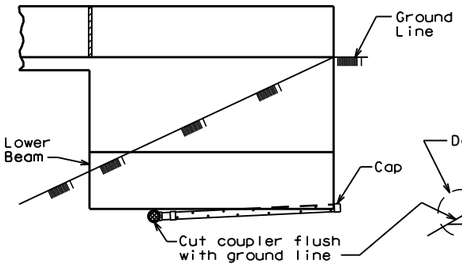

ELEVATION OF WING

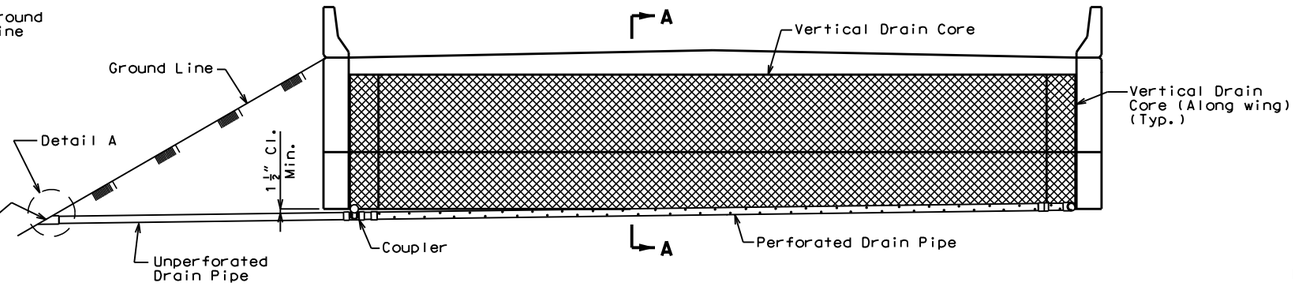

ELEVATION OF END BENT

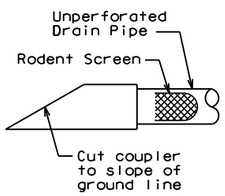

DETAIL A

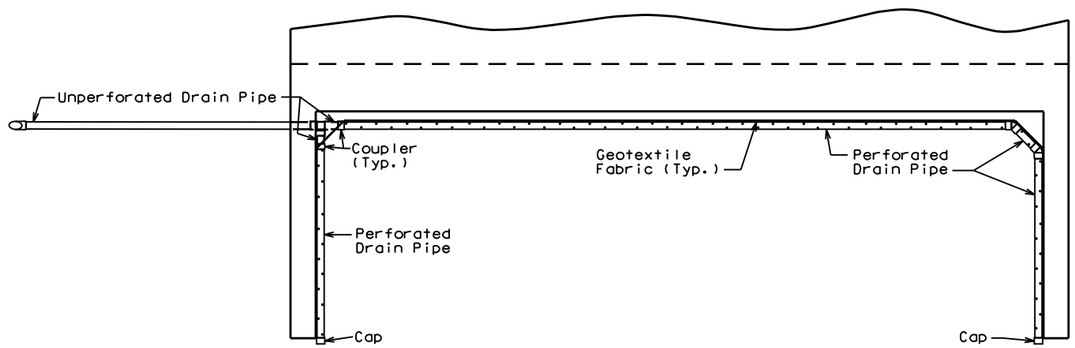

PLAN OF END BENT

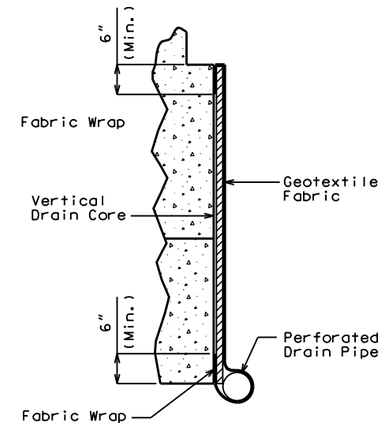

PART SECTION A-A
(Section thru wing similar)

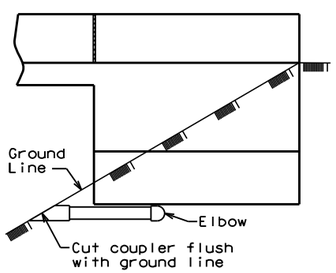

ELEVATION OF WING

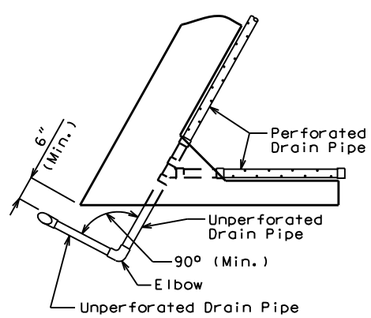

PART PLAN

OPTIONAL TURNED DRAIN
(Only if rock is encountered outside of wing)

General Notes:

All drain pipe shall be sloped 1 to 2 percent.

Drain pipe may be either 6-inch diameter corrugated metallic-coated steel pipe underdrain, 4-inch diameter corrugated polyvinyl chloride (PVC) drain pipe, or 4-inch diameter corrugated polyethylene (PE) drain pipe.

Drain pipe shall be placed at fill face of end bent and inside face of wings. The pipe shall slope to lowest grade of ground line, also missing the lower beam of end bent by a minimum of 1 1/2 inches.

Perforated pipe shall be placed at fill face side and inside face of wings at the bottom of end bent and plain pipe shall be used where the vertical drain ends to the exit at ground line.

VERTICAL DRAIN AT END BENTS

(Squared end bent shown, skewed end bent similar)

Detailed Oct 2019
Checked Oct 2019

Note: This drawing is not to scale. Follow dimensions.

STATE OF MISSOURI
STEPHEN ALSBURY
NUMBER E-24698
REGISTERED PROFESSIONAL ENGINEER

DATE PREPARED	
12/12/2019	
STATE MO	SHEET NO. 1-5
ROUTE H-HOUSESPRINGS	
COUNTY JEFFERSON	
JOB NO. 19-6043	
PROJECT NO. .	
BRIDGE NO. .	

DATE	DESCRIPTION
.	.
.	.
.	.
.	.
.	.
.	.
.	.

IF A SEAL IS PRESENT ON THIS SHEET IT HAS BEEN ELECTRONICALLY SEALED AND DATED.

JEFFERSON COUNTY PUBLIC WORKS DEPARTMENT
P.O. BOX 100
HILLSBORO, MO 63050
(636-797-5340) PHONE
(636-797-5565) FAX

ABNA
4140 LINDELL BOULEVARD
ST. LOUIS, MO 63108
PH. 314-454-0222
CERTIFICATE/LICENSE NO. 001501

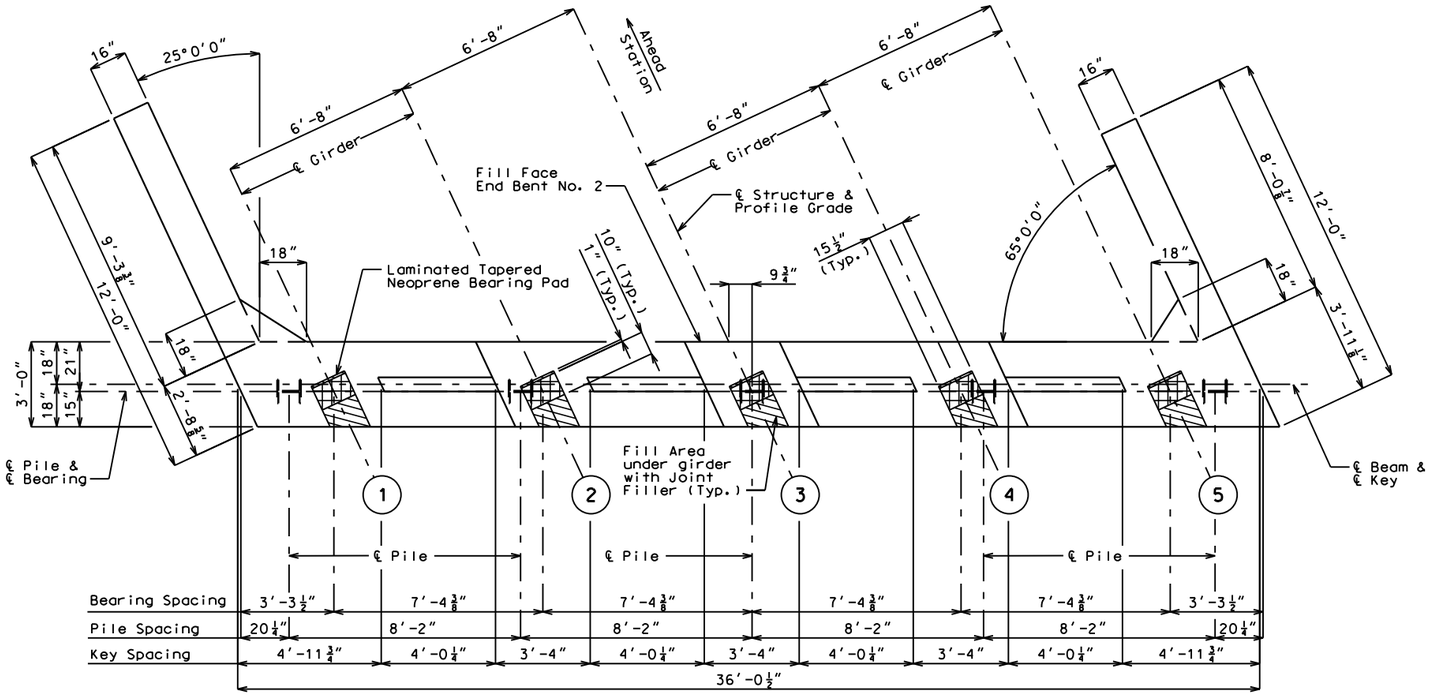

PLAN OF BEAM SHOWING DIMENSIONS

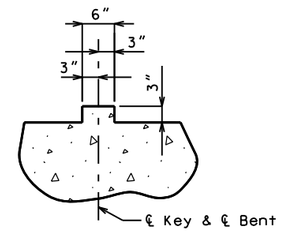

TYPICAL SECTION
THRU KEY

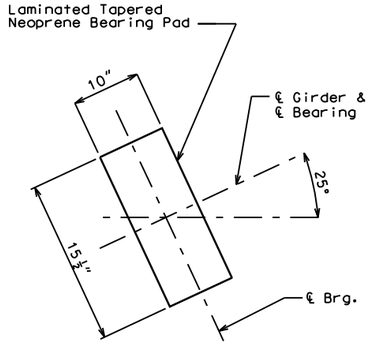

TYPICAL PLAN OF BEARINGS
5 Required

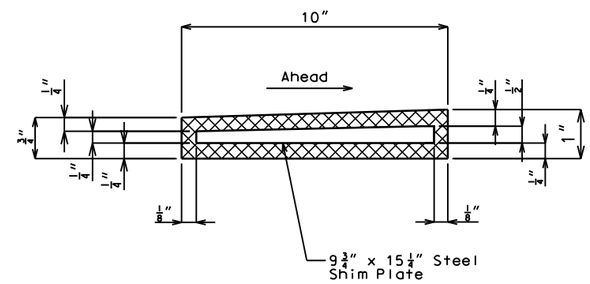

TYPICAL SECTION THRU
LAMINATED NEOPRENE
BEARING PAD

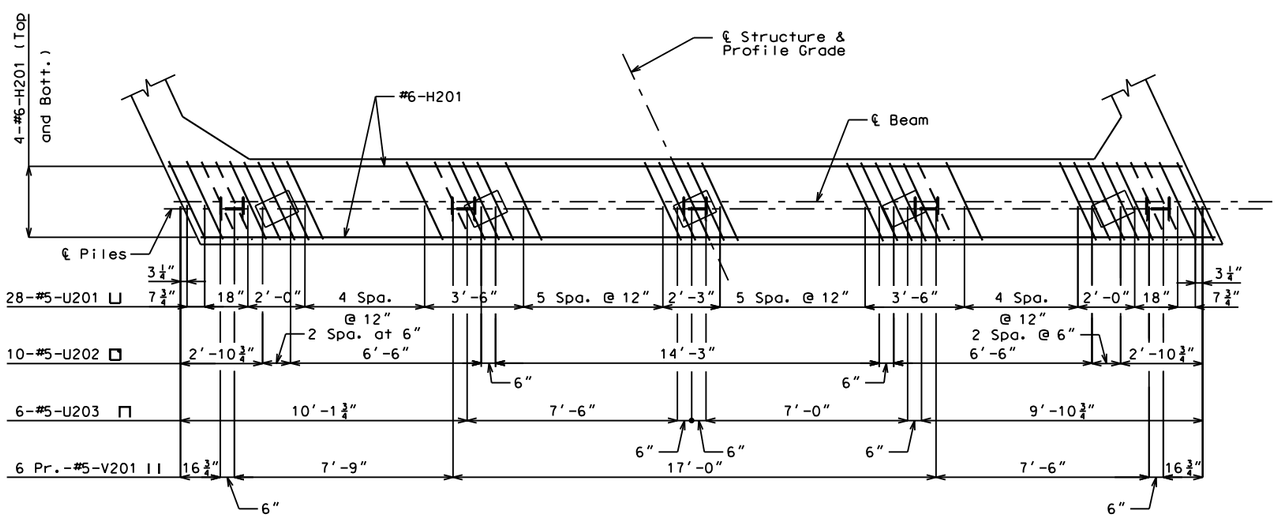

PLAN OF BEAM SHOWING REINFORCEMENT

Notes:

Work this Sheet with Sheets No. 8 and 9.

For details of Pile Anchors, see Sheet No. 2.

For details of Vertical Drain at End Bents, see Sheet No. 6.

All vertical reinforcing bars in the substructure beams or caps shall be field adjusted to clear piles by at least 1½".

All U-Bars and Pr. V-Bars in End Bent shall be placed parallel to ℄ Structure.

Substructure Quantity Table for End Bent No. 2		
Item		Quantity
Class 1 Excavation	cu. yard	80
Structural Steel Pile (10 in.)	linear foot	90
Pre-Bore For Piling	linear foot	80
Pile Point Reinforcement	each	5
Class B Concrete (substructure)	cu. yard	14.6
Vertical Drain at End Bent	each	1

PLAN DETAILS - END BENT NO. 2

Detailed Oct 2019
Checked Oct 2019

Note: This drawing is not to scale. Follow dimensions.

STATE OF MISSOURI
STEPHEN ALSBURY
NUMBER E-24698
REGISTERED PROFESSIONAL ENGINEER

DATE PREPARED	
12/12/2019	
STATE	SHEET NO.
MO	1-6
ROUTE	
H-HOUSESPRINGS	
COUNTY	
JEFFERSON	
JOB NO.	
19-6043	
PROJECT NO.	
.	
BRIDGE NO.	
.	

DATE	DESCRIPTION
.	.
.	.
.	.
.	.
.	.
.	.

IF A SEAL IS PRESENT ON THIS SHEET IT HAS BEEN ELECTRONICALLY SEALED AND DATED.

JEFFERSON COUNTY PUBLIC WORKS
DEPARTMENT
P.O. BOX 100
HILLSBORO, MO 63050
(636-797-5340) PHONE
(636-797-5565) FAX

ABNA
4140 LINDELL BOULEVARD
ST. LOUIS, MO 63108
PH. 314-454-0222
CERTIFICATE/LICENSE NO. 001501

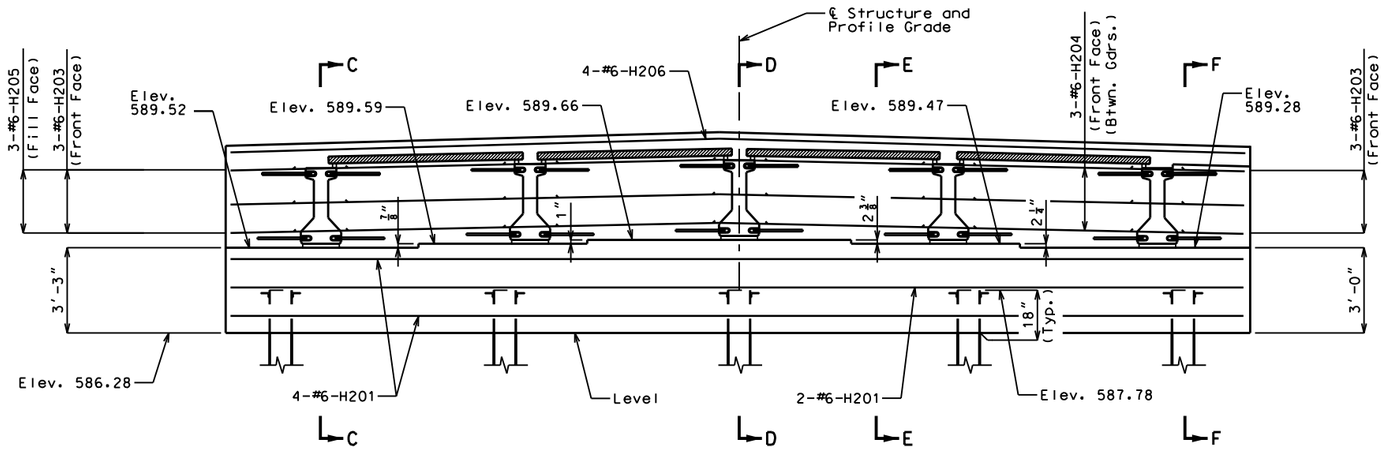

SECTION NEAR END BENT

Note: Construction joint key 6"x3" not shown.

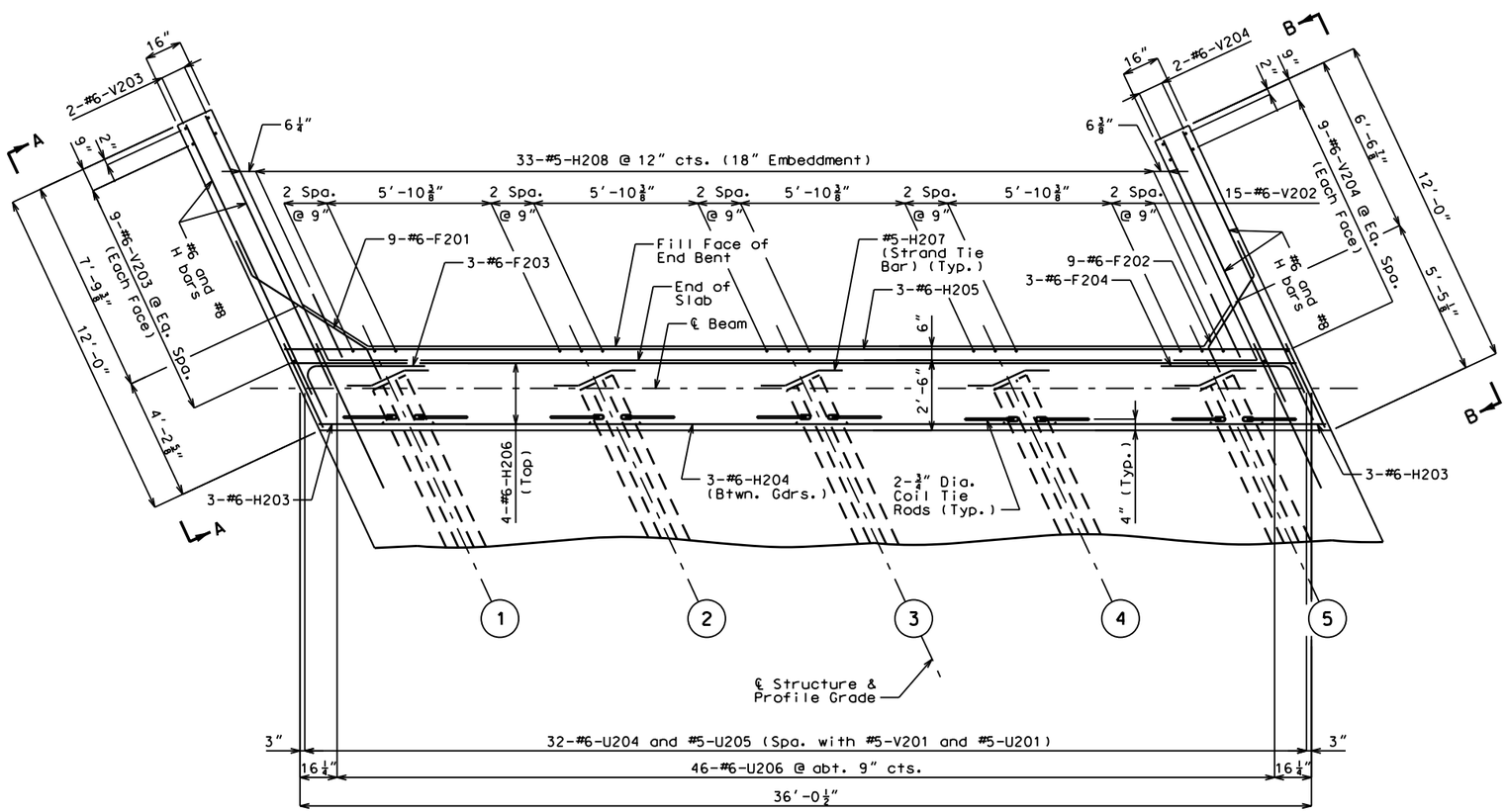

PART PLAN

DETAILS OF END BENT NO. 2

Detailed Oct 2019
Checked Oct 2019

Note: This drawing is not to scale. Follow dimensions.

STATE OF MISSOURI
STEPHEN ALSBURY
NUMBER E-24698
REGISTERED PROFESSIONAL ENGINEER

DATE PREPARED	
12/12/2019	
STATE	SHEET NO.
MO	1·7
ROUTE	
H-HOUSESPRINGS	
COUNTY	
JEFFERSON	
JOB NO.	
19-6043	
PROJECT NO.	
.	
BRIDGE NO.	
.	

DATE	DESCRIPTION
.	.
.	.
.	.
.	.
.	.
.	.
.	.

IF A SEAL IS PRESENT ON THIS SHEET IT HAS BEEN ELECTRONICALLY SEALED AND DATED.

JEFFERSON COUNTY PUBLIC WORKS DEPARTMENT
P.O. BOX 100
HILLSBORO, MO 63050
(636-797-5340) PHONE
(636-797-5565) FAX

ABNA
4140 LINDELL BOULEVARD
ST. LOUIS, MO 63108
PH. 314-454-0222
CERTIFICATE/LICENSE NO. 001501

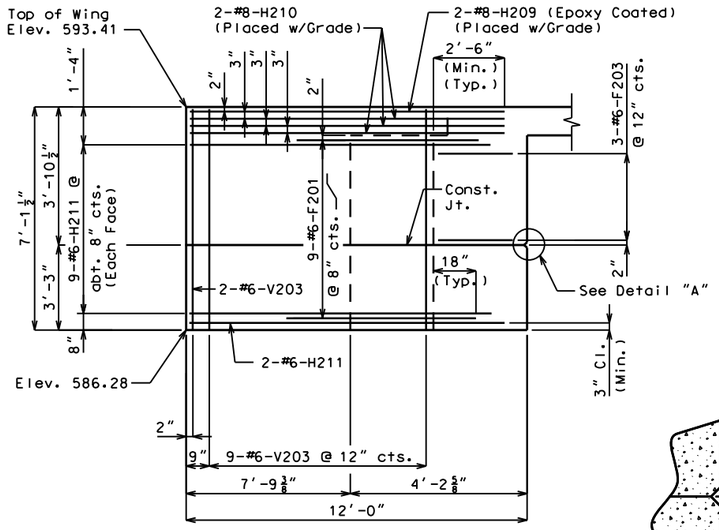

ELEVATION A-A

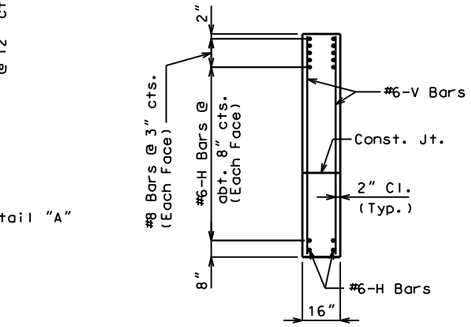

PART SECTION
THRU WING

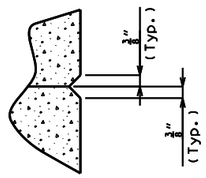

DETAIL "A"

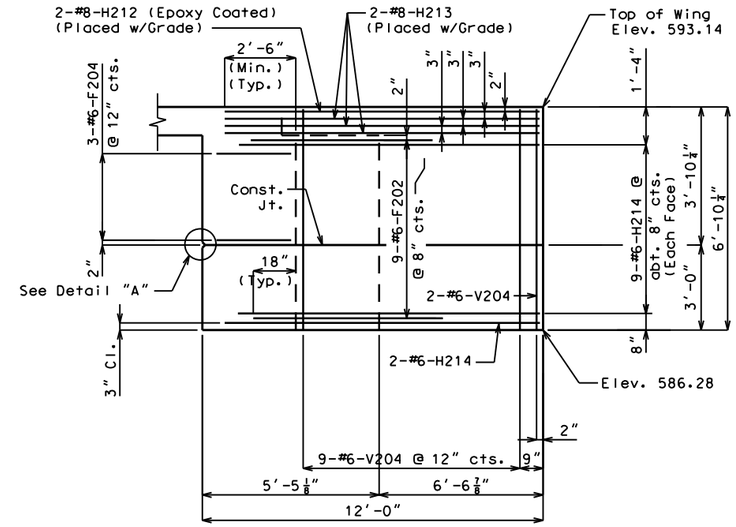

ELEVATION B-B

Notes:

Work this Sheet with Sheets No. 7 and 8.

For location of Elevations A-A, B-B and Sections C-C, D-D, E-E and F-F see Sheet No. 6.

Bend #6 F bars in field to clear girders.

All strands at end of girder shall be field bent or, if necessary, cut in field to maintain 1 1/2" minimum clearance to fill face of end bent.

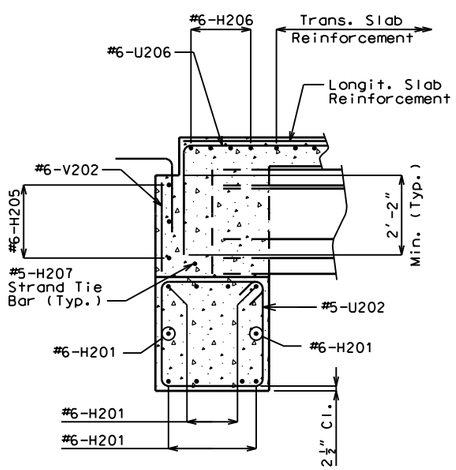

SECTION C-C

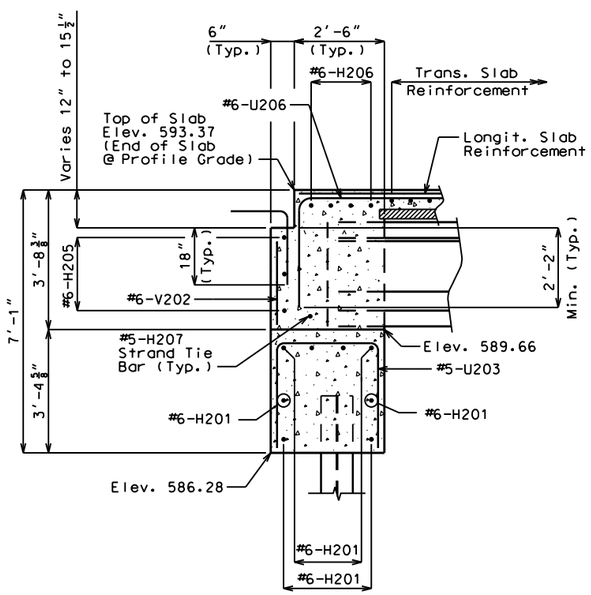

SECTION D-D

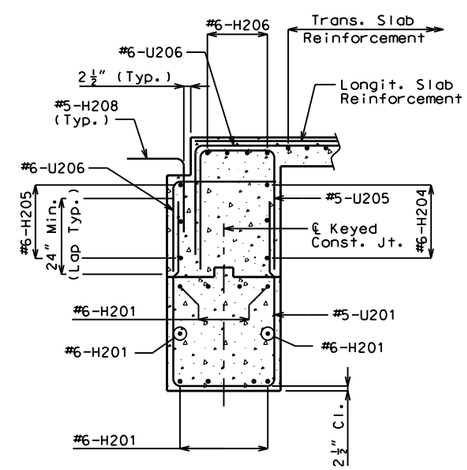

SECTION E-E

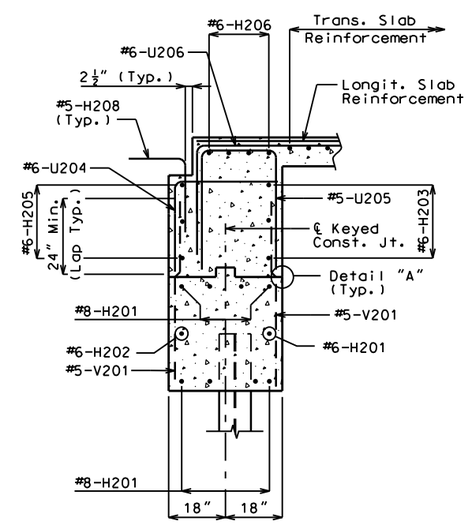

SECTION F-F

SECTIONS OF END BENT NO. 2

Detailed Oct 2019
Checked Oct 2019

Note: This drawing is not to scale. Follow dimensions.

STATE OF MISSOURI
STEPHEN ALSBURY
NUMBER E-24698
REGISTERED PROFESSIONAL ENGINEER

DATE PREPARED	
12/12/2019	
STATE	SHEET NO.
MO	1·8
ROUTE	
H-HOUSESPRINGS	
COUNTY	
JEFFERSON	
JOB NO.	
19-6043	
PROJECT NO.	
.	
BRIDGE NO.	
.	

DATE	DESCRIPTION
.	.
.	.
.	.
.	.
.	.
.	.
.	.

IF A SEAL IS PRESENT ON THIS SHEET IT HAS BEEN ELECTRONICALLY SEALED AND DATED.

JEFFERSON COUNTY PUBLIC WORKS DEPARTMENT
P.O. BOX 100
HILLSBORO, MO 63050
(636-797-5340) PHONE
(636-797-5565) FAX

ABNA
4140 LINDELL BOULEVARD
ST. LOUIS, MO 63108
PH. 314-454-0222
CERTIFICATE/LICENSE NO. 001501

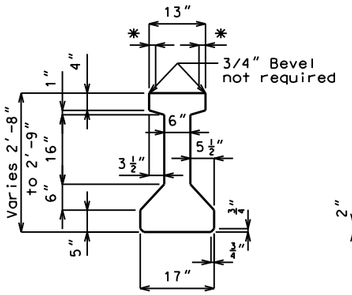

GIRDER DIMENSIONS

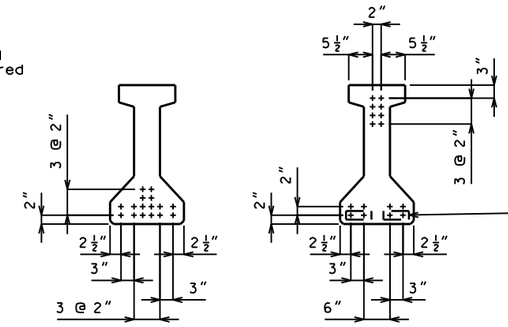

STRAND ARRANGEMENTS

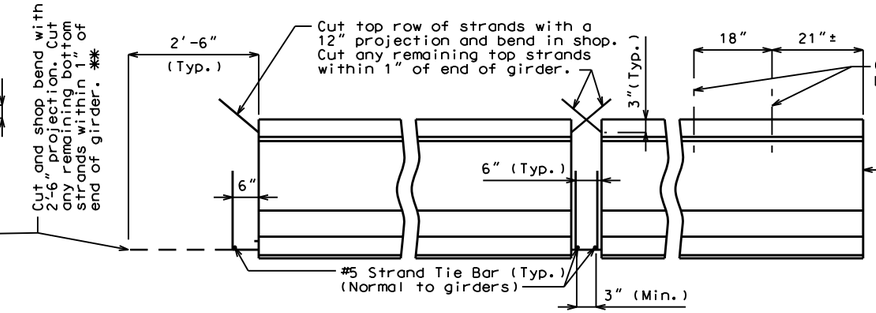

STRAND DETAILS AT GIRDER ENDS

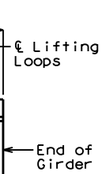

LOCATION OF LIFTING LOOPS

Fabricator shall be responsible for location and design of lifting devices.

Concrete for prestressed girders shall be Class A-1 with f'c = 6000 psi and f'ci = 5000 psi.

(+) indicates prestressing strand.

Use 16 strands with an initial prestress force of 496 kips.

Prestressing tendons shall be uncoated, seven-wire, low-relaxation strands, 1/2 inch diameter in accordance with AASHTO M 203, Grade 270. Pretensioned members shall be in accordance with Sec 1029.

✱ At contractor's option a 1 1/2" to 1 3/4" smooth finish strip is permitted to facilitate placement of preformed fiber expansion joint material or expanded or extruded polystyrene bedding material for the prestressed panels.

✱✱ At the contractor's option the location for bent-up strands may be varied from that shown for fully bonded strands only. The total number of bent-up strands shall not be changed. One strand tie bar is required for each layer of bent-up strands except at end bents which require one bar on the bottom layer of strands only. No additional payment will be made if additional strand tie bars are required.

BILL OF REINFORCING STEEL - EACH GIRDER

NO.	SIZE & MARK	ACTUAL LENGTH	SHAPE	BENDING DIAGRAM
2	5 A1	50'-9"	20	
164	4 B1	4'-0"	11	
16	6 B2	3'-6"	11	
90	4 C1	15"	10	
180	4 D1	2'-3"	9	

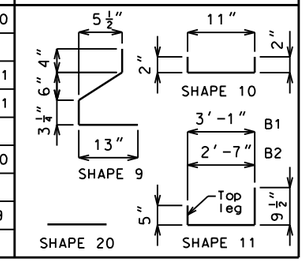

All dimensions are out to out.

Hooks and bends shall be in accordance with the CRSI Manual of Standard Practice for Detailing Reinforced Concrete Structures, Stirrup and Tie Dimensions.

Actual lengths are measured along centerline of bar to the nearest inch.

Minimum clearance to reinforcing shall be 1".

All reinforcement shall be Grade 60.

The two D1 bars may be furnished as one bar at the fabricator's option.

All B1 bars shall be epoxy coated.

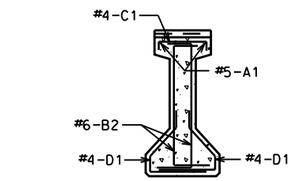

SECTION A-A
Strands not shown for clarity.

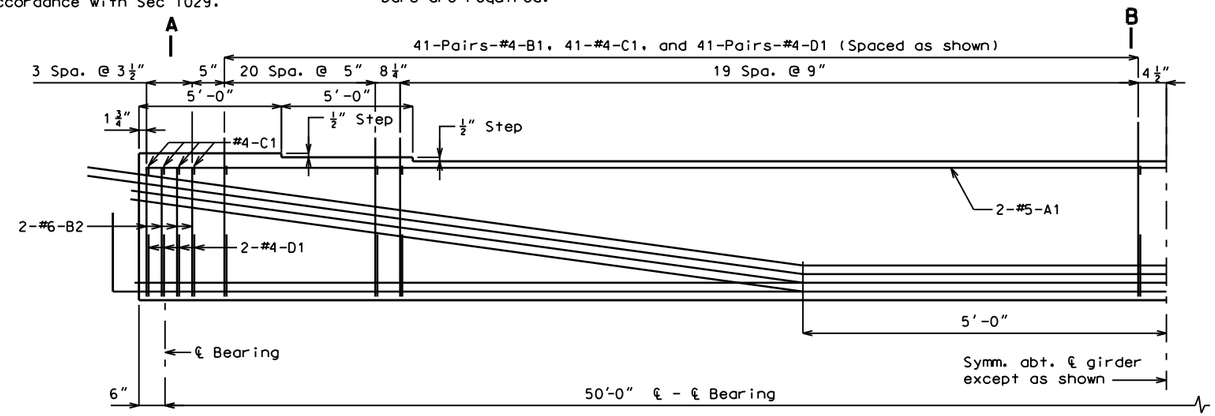

HALF ELEVATION OF GIRDER SPAN (1-2)

Exterior and interior girders are the same, except for coil ties, and coil inserts for slab drains and holes for steel intermediate diaphragms.

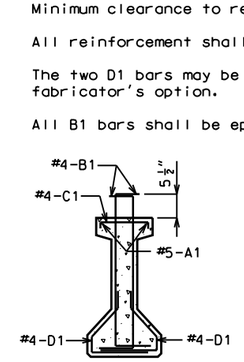

SECTION B-B
Strands not shown for clarity.

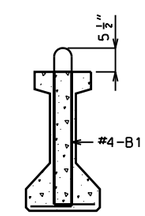

B1 BAR PERMISSIBLE ALTERNATE SHAPE

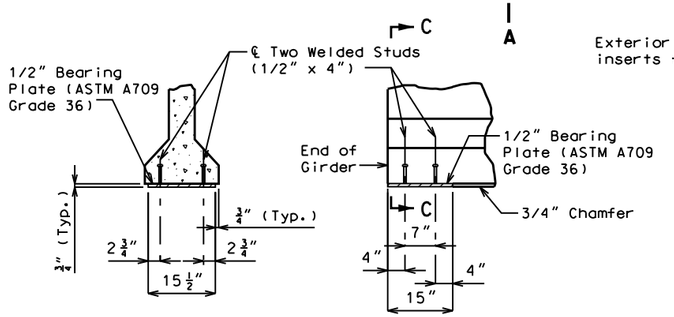

SECTION C-C PART ELEVATION AT END OF GIRDER

BEARING PLATE DETAILS

Galvanize the 1/2" bearing plate (ASTM A709 Grade 36) in accordance with ASTM A123.

Cost of furnishing, galvanizing, and installing the 1/2" bearing plate (ASTM A709 Grade 36) and welded studs in the prestressed girder will be considered completely covered by the contract unit price for Prestressed Concrete I-Girder.

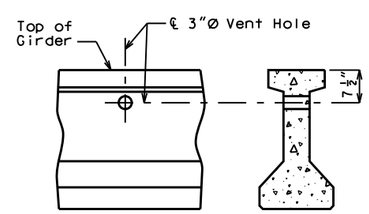

PART ELEVATION OF GIRDER PART SECTION NEAR VENT HOLE

DETAILS OF VENT HOLE

Place vent holes at or near upgrade 1/3 point of girders and clear reinforcing steel or strands by 1 1/2" minimum and steel intermediate diaphragm bolt connections by 6" minimum.

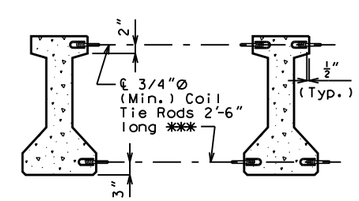

EXTERIOR GIRDERS AT INT. BENTS EXTERIOR GIRDERS AT END BENTS INTERIOR GIRDERS AT ALL BENTS

DETAILS OF COIL TIES

✱✱✱ Length of coil tie rods at exterior girders at end bents = 2'-1".

Cost of 3/4"Ø coil tie rods placed in diaphragms will be considered completely covered by the contract unit price for Prestressed Concrete I-Girder.

Coil ties shall be held in place in the forms by slotted wire-setting-studs projecting through forms. Studs are to be left in place or replaced with temporary plugs until girders are erected, then replaced by coil tie rods.

For location of coil ties, see Sheets No. 4 & 8.

The 1 1/2"Ø holes shall be cast in the web for steel intermediate diaphragms. Drilling is not allowed.

For details of diaphragms, see Sheet No. 11.

For Girder Camber Diagram, see Sheet No. 13.

Detailed Oct 2019
Checked Oct 2019

Note: This drawing is not to scale. Follow dimensions.

STATE OF MISSOURI STEPHEN ALSBURY NUMBER E-24698 REGISTERED PROFESSIONAL ENGINEER

DATE PREPARED 12/12/2019
STATE MO SHEET NO. 1-9
ROUTE H-HOUSESPRINGS
COUNTY JEFFERSON
JOB NO. 19-6043
PROJECT NO. .
BRIDGE NO. .

DATE	DESCRIPTION
.	.
.	.
.	.
.	.
.	.
.	.
.	.

IF A SEAL IS PRESENT ON THIS SHEET IT HAS BEEN ELECTRONICALLY SEALED AND DATED.

JEFFERSON COUNTY PUBLIC WORKS DEPARTMENT
P.O. BOX 100
HILLSBORO, MO 63050
(636-797-5340) PHONE
(636-797-5565) FAX

ABNA
4140 LINDELL BOULEVARD
ST. LOUIS, MO 63108
PH. 314-454-0222
CERTIFICATE/LICENSE NO. 001501

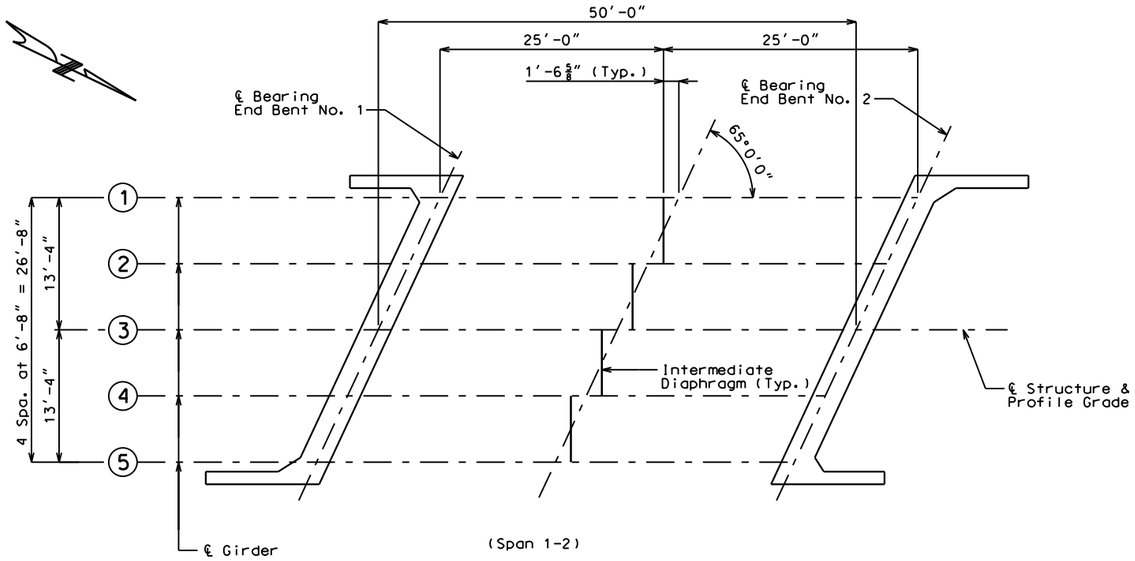

LOCATION OF INTERMEDIATE DIAPHRAGMS

Note: Longitudinal dimensions are measured horizontal.

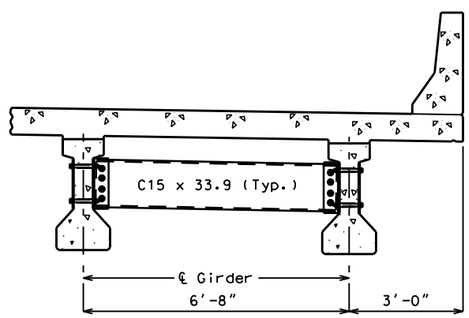

PART SECTION SHOWING INTERMEDIATE DIAPHRAGMS

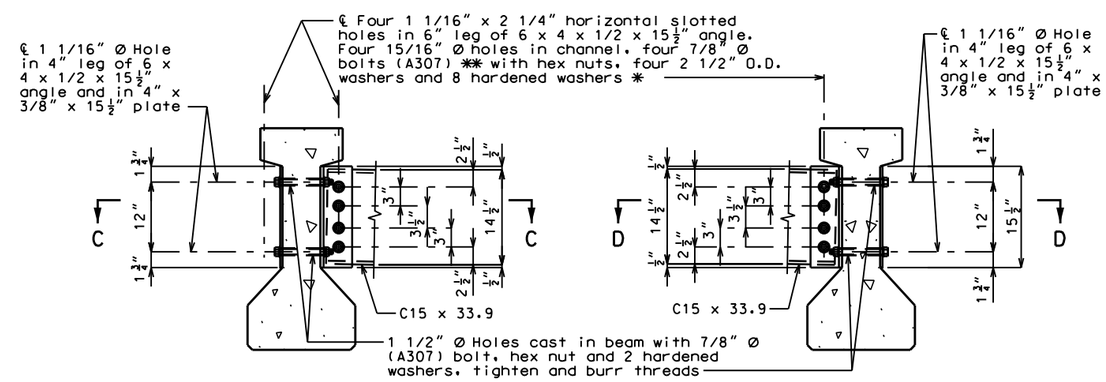

SECTION THRU INT. GIRDER AT DIAPHRAGM

SECTION THRU EXT. GIRDER AT DIAPHRAGM

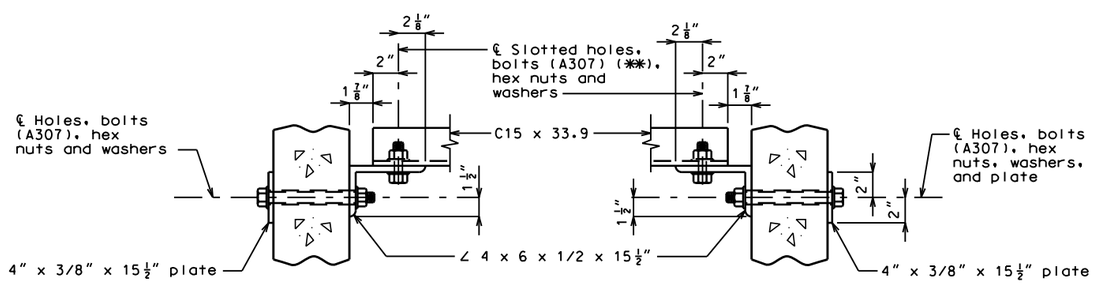

SECTION C-C

SECTION D-D

STEEL DIAPHRAGM NOTES:

✱ In lieu of 2 1/2" outside diameter washers, contractor may substitute a 3/16" (Min. thickness) plate with four 15/16" Ø holes and one hardened washer per bolt.

✱✱ Bolts shall be tightened to provide a tension of one-half that specified in Sec 712 for high strength bolt installation. A325 bolts may be substituted for and installed in accordance with the requirements for the specified A307 bolts.

All diaphragm materials including bolts, nuts, and washers shall be galvanized.

Fabricated structural steel shall be ASTM A709 Grade 36 except as noted.

Payment for furnishing and installing steel intermediate diaphragms will be considered completely covered by the contract unit price for Steel Intermediate Diaphragm for P/S Concrete Girders.

Shop drawings will not be required for steel intermediate diaphragms and angle connections.

STEEL INTERMEDIATE DIAPHRAGMS

Detailed Oct 2019
Checked Oct 2019

Note: This drawing is not to scale. Follow dimensions.

STATE OF MISSOURI
STEPHEN ALSBURY
NUMBER E-24698
REGISTERED PROFESSIONAL ENGINEER

DATE PREPARED	
12/12/2019	
STATE	SHEET NO.
MO	20
ROUTE	
H-HOUSESPRINGS	
COUNTY	
JEFFERSON	
JOB NO.	
19-6043	
PROJECT NO.	
.	
BRIDGE NO.	
.	

DATE	DESCRIPTION
.	.
.	.
.	.
.	.
.	.
.	.
.	.

IF A SEAL IS PRESENT ON THIS SHEET IT HAS BEEN ELECTRONICALLY SEALED AND DATED.

JEFFERSON COUNTY PUBLIC WORKS DEPARTMENT
P.O. BOX 100
HILLSBORO, MO 63050
(636-797-5340) PHONE
(636-797-5565) FAX

ABNA
4140 LINDELL BOULEVARD
ST. LOUIS, MO 63108
PH. 314-454-0222
CERTIFICATE/LICENSE NO. 001501

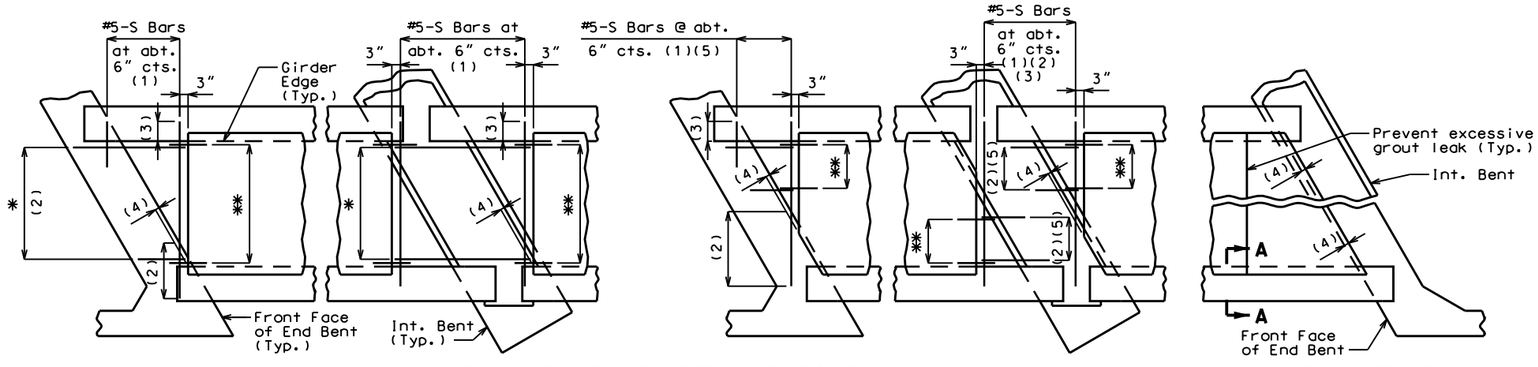

SQUARED END PANELS OR TRUNCATED END PANELS

SKEWED END PANELS

PLAN SHOWING PANELS PLACEMENT

* #5-S Bars at abt. 9" cts. (1)
** #3-P1 at 12" cts. (End panels only)

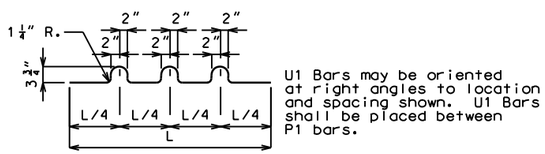

U1 Bars may be oriented at right angles to location and spacing shown. U1 Bars shall be placed between P1 bars.

BENDING DIAGRAM FOR U1 BAR

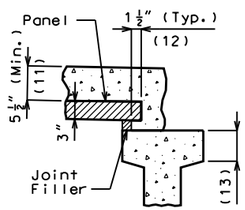

SECTION A-A

Joint Filler Dimensions		
Width	Height	
	Min.	Max.
1 1/2"	1"	2"

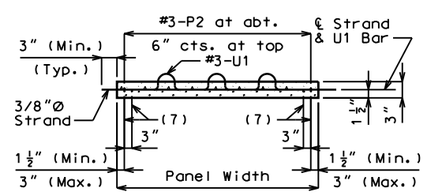

SECTION B-B

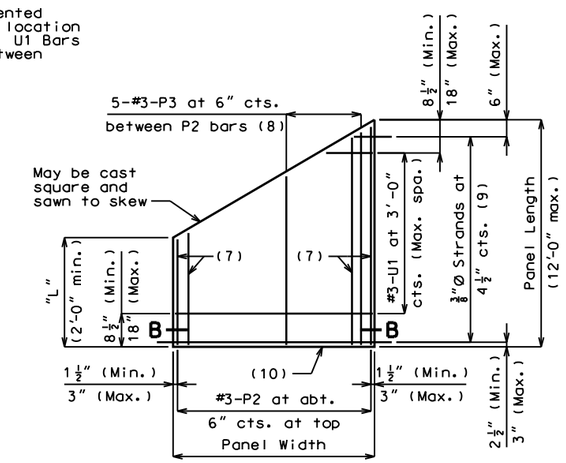

PLAN OF OPTIONAL SKEWED END PANEL

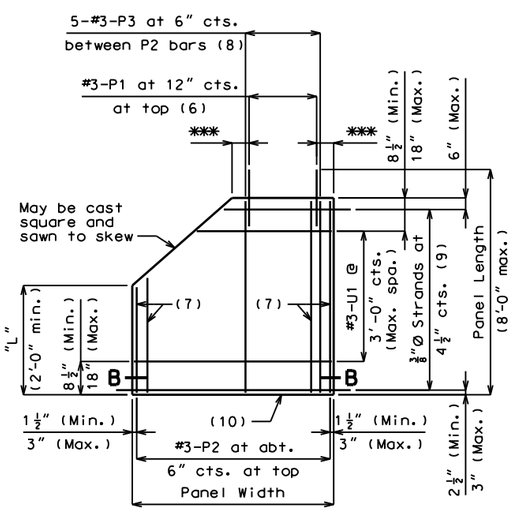

PLAN OF OPTIONAL TRUNCATED END PANEL

*** 3" (Min.), 6" (Max.)

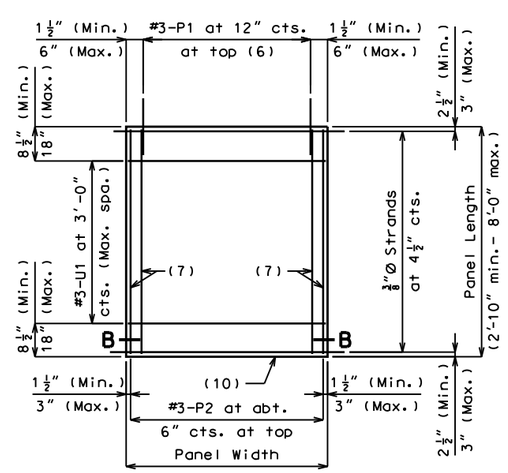

PLAN OF SQUARED PANEL

DETAILS OF PRESTRESSED PANELS

General Notes:

Prestressed Panels:

Concrete for prestressed panels shall be Class A-1 with f'c = 6,000 psi, f'ci = 4,000 psi.

The top surface of all panels shall receive a scored finish with a depth of scoring of 1/8" perpendicular to the prestressing strands in the panels.

Prestressing tendons shall be high-tensile strength, uncoated, seven-wire, low-relaxation strands for prestressed concrete in accordance with AASHTO M 203 Grade 270, with nominal diameter of strand = 3/8" and nominal area = 0.085 sq.in. and minimum ultimate strength = 22.95 kips (270 ksi). Larger strands may be used with the same spacing and initial tension.

Initial prestressing force = 17.2 kips/strand.

The method and sequence of releasing the strands shall be shown on the shop drawings.

Suitable anchorage devices for lifting panels may be cast in panels, provided the devices are shown on the shop drawings and approved by the engineer. Panel lengths shall be determined by the contractor and shown on the shop drawings.

When squared end panels are used at skewed bents, the skewed portion shall be cast full depth. No separate payment will be made for additional concrete and reinforcing required.

Support from diaphragm forms is required under the optional skewed end until cast-in-place concrete has reached 3,000 psi compressive strength.

Prestressed panels shall be brought to saturated surface-dry (SSD) condition just prior to the deck pour. There shall be no free standing water on the panels or in the area to be cast.

The prestressed panel quantities are not included in the table of estimated quantities for the slab.

Reinforcing Steel:

All dimensions are out to out.

Hooks and bends shall be in accordance with the CRSI Manual of Standard Practice for Detailing Reinforced Concrete Structures. Stirrup and Tie Dimensions.

Minimum clearance to reinforcing steel shall be 1 1/2", unless otherwise shown.

If U1 bars interfere with placement of slab steel, U1 loops may be bent over, as necessary, to clear slab steel.

Welded wire reinforcement providing a minimum area of reinforcing perpendicular to strands of 0.22 sq. in./ft., with spacing parallel to strands sufficient to ensure proper handling, may be used in lieu of the #3-P2 bars shown. Wire or bar diameter shall not be larger than 0.375 inch. The above alternative reinforcement criteria may be used in lieu of the #3-P3 bars, when required, and placed over a width not less than 2 feet.

The reinforcing steel shall be tied securely to the 3/8"Ø strands with the following maximum spacing in each direction:
#3-P2 bars at 16 inches.
Welded wire reinforcement at 2'-0".

Tie the #3-U1 bars to the #3-P2 bars, or to the welded wire reinforcement, or to the strands at about 3'-0" centers.

Minimum reinforcement steel length shall be 2'-0".

All reinforcement other than prestressing strands shall be epoxy coated.

Precast panels may be in contact with stirrup reinforcing in diaphragms.

S-bars are not listed in the bill of reinforcing.

Cost of S-bars will be considered completely covered by the contract unit price for the slab.

Joint Filler:

Joint filler shall be preformed fiber expansion joint material in accordance with Sec 1057 or expanded or extruded polystyrene bedding material in accordance with Sec 1073.

Use Slab Haunching Diagram on Sheet No. 12 for determining thickness of joint filler within the limits noted in the table of Joint Filler Dimensions.

Thicker material may be used on one or both sides of the girder to reduce cast-in-place concrete thickness to within tolerances.

The same thickness of preformed fiber expansion joint material shall be used under any one edge of any panel except at locations where top flange thickness may be stepped. The maximum change in thickness between adjacent panels shall be 1/4 inch. The polystyrene bedding material may be cut with a transition to match haunch height above top of flange.

Joint filler shall be glued to the girder. When thickness exceeds 1 1/2 inches, the joint filler shall be glued top and bottom. The glue used shall be the type recommended by the joint filler manufacturer.

Edges of panels shall be uniformly seated on the joint filler before slab reinforcement is placed.

Reference Notes:

Plan of Panels Placement:

(1) S-bars shown are bottom steel in slab between panels and used with squared and truncated end panels only.

(2) Extend S-bars 18 inches beyond the front face of end bents and int. bents for squared and truncated end panels only.

(3) Extend S-bars 9 inches beyond edge of girder (Typ.).

(4) End panels shall be dimensioned 1/2" min. to 1 1/2" max. from the inside face of diaphragm.

(5) For truncated end panels, use a min. of #5-S bars at 6" crossings in openings, or min. 4x4-W7xW7.

Plans of Panels:

(6) For end panels only, P1 bars shall be 2'-0" in length and embedded 12". P1 bars will not be required for panels at squared integral end bents.

(7) #3-P2 bars near edge of panel at bottom (under strands).

(8) Use #3-P3 bars if panel is skewed 45° or greater.

(9) Any strand 2'-0" or shorter shall have a #4 reinforcing bar on each side of it, centered between strands. Strands 2'-0" or shorter may then be debonded at the fabricator's option.

(10) Optional 1/2" x 45°Chamfer one or both sides at bottom.

Section A-A:

(11) Slab thickness over prestressed panels varies due to girder camber. In order to maintain minimum slab thickness, it may be necessary to raise the grade uniformly throughout the structure. No payment will be made for additional labor or materials required for necessary grade adjustment.

(12) Contractor shall ensure proper consolidation under and between panels.

(13) At the contractor's option, the variation in slab thickness over prestressed panels may be eliminated or reduced by increasing and varying the girder top flange thickness. Dimensions shall be shown on the shop drawings.

Detailed Oct 2019
Checked Oct 2019

Note: This drawing is not to scale. Follow dimensions.

STATE OF MISSOURI
STEPHEN ALSBURY
NUMBER E-24698
REGISTERED PROFESSIONAL ENGINEER

DATE PREPARED	
12/12/2019	
STATE	SHEET NO.
MO	21
ROUTE	
H-HOUSESPRINGS	
COUNTY	
JEFFERSON	
JOB NO.	
19-6043	
PROJECT NO.	
.	
BRIDGE NO.	
.	

DATE	DESCRIPTION
.	.
.	.
.	.
.	.
.	.
.	.
.	.

IF A SEAL IS PRESENT ON THIS SHEET IT HAS BEEN ELECTRONICALLY SEALED AND DATED.

JEFFERSON COUNTY PUBLIC WORKS DEPARTMENT
P.O. BOX 100
HILLSBORO, MO 63050
(636-797-5340) PHONE
(636-797-5565) FAX

ABNA
4140 LINDELL BOULEVARD
ST. LOUIS, MO 63108
PH. 314-454-0222
CERTIFICATE/LICENSE NO. 001501

Theoretical Bottom of Slab Elevations at ℄ Girder (Prior to Forming for Slab)✱✱					
	Span (1-2)				
	℄ Brg	0.25	0.50	0.75	℄ Brg
Girder No. 1	591.54	591.82	592.08	592.31	592.52
Girder No. 2	591.61	591.89	592.15	592.38	592.59
Girder No. 3	591.69	591.97	592.23	592.45	592.66
Girder No. 4	591.49	591.77	592.03	592.26	592.47
Girder No. 5	591.30	591.58	591.84	592.07	592.27

(✱✱) Elevations are based on constant slab thickness of 8½" and include allowance for theoretical dead load deflections due to weight of slab (including prestressed panel) and rail.

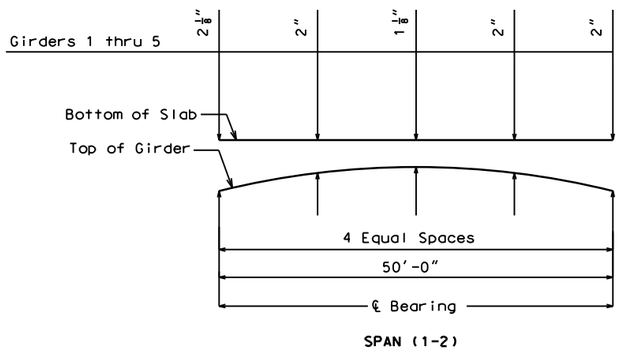

THEORETICAL SLAB HAUNCHING DIAGRAM

Concrete in the slab haunches is included in the Estimated Quantities for Slab on Concrete I-Girders.

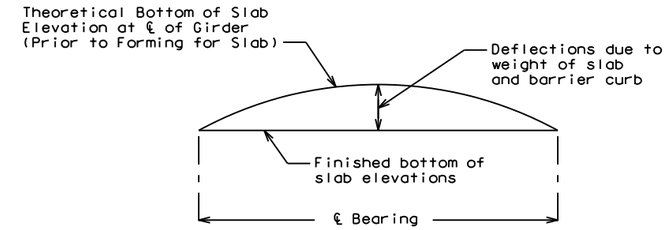

TYPICAL SLAB ELEVATIONS DIAGRAM

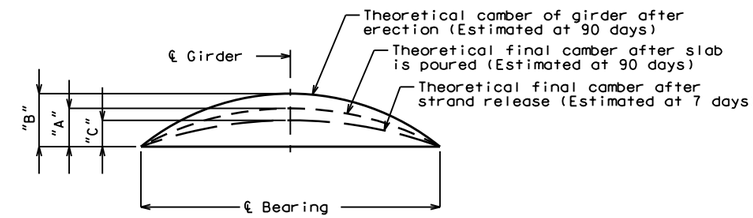

GIRDER CAMBER DIAGRAM

	Span (1-2)		
	"A"	"B"	"C"
Ext. Girder	1⅜"	2"	1⅛"
Int. Girder	1⅜"		

If girder camber is different from that shown in the camber diagram, an increase in slab thickness or a raise in grade uniformly throughout the structure shall be necessary.
No payment will be made for additional labor or materials required for variation in haunching, slab thickness or grade adjustment.

Concrete in the slab haunches is included in the Estimated Quantities for Slab on Concrete I-Girders.

Conversion factors for girder camber
0.1 pt. = 0.314 x 0.5 pt.
0.2 pt. = 0.593 x 0.5 pt.
0.3 pt. = 0.813 x 0.5 pt.
0.4 pt. = 0.952 x 0.5 pt.

0.25 pt. = 0.7125 x 0.5 pt.

SLAB ELEVATION DIAGRAMS

Detailed Oct 2019
Checked Oct 2019

Note: This drawing is not to scale. Follow dimensions.

STATE OF MISSOURI
STEPHEN ALSBURY
NUMBER E-24698
REGISTERED PROFESSIONAL ENGINEER

DATE PREPARED 12/12/2019
STATE MO
SHEET NO. 2-2
ROUTE H-HOUSESPRINGS
COUNTY JEFFERSON
JOB NO. 19-6043
PROJECT NO. .
BRIDGE NO. .

DATE	DESCRIPTION
.	.
.	.
.	.
.	.
.	.
.	.
.	.

IF A SEAL IS PRESENT ON THIS SHEET IT HAS BEEN ELECTRONICALLY SEALED AND DATED.

JEFFERSON COUNTY PUBLIC WORKS
DEPARTMENT
P.O. BOX 100
HILLSBORO, MO 63050
(636-797-5340) PHONE
(636-797-5565) FAX

ABNA
4140 LINDELL BOULEVARD
ST. LOUIS, MO 63108
PH. 314-454-0222
CERTIFICATE/LICENSE NO. 001501

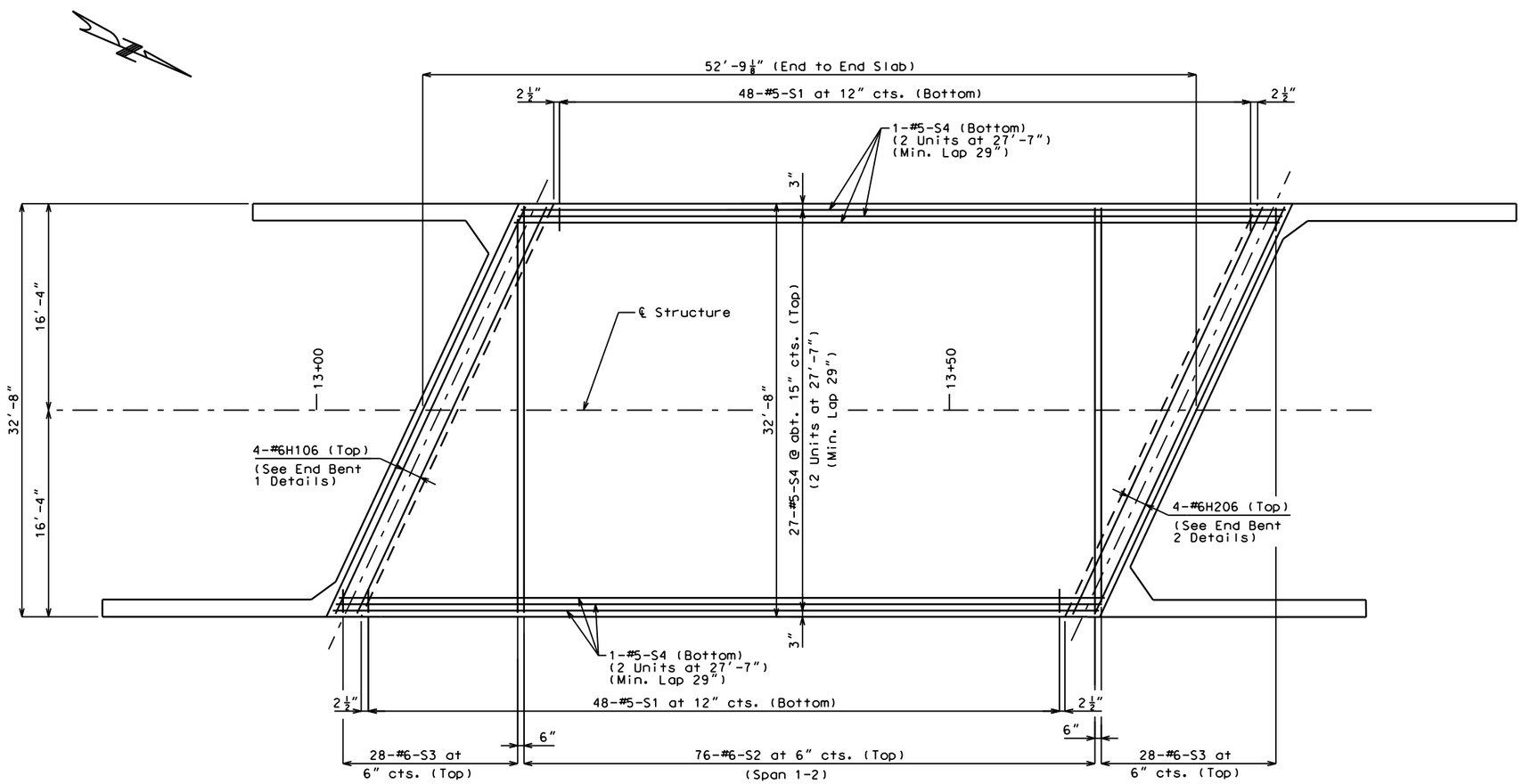

PLAN

SLAB PLAN

Detailed Oct 2019
Checked Oct 2019

Note: This drawing is not to scale. Follow dimensions.

STATE OF MISSOURI
STEPHEN ALSBURY
NUMBER E-24698
REGISTERED PROFESSIONAL ENGINEER

DATE PREPARED 12/12/2019

STATE	SHEET NO.
MO	2-3

ROUTE H-HOUSESPRINGS
COUNTY JEFFERSON
JOB NO. 19-6043
PROJECT NO. .
BRIDGE NO. .

DATE	DESCRIPTION
.	.
.	.
.	.
.	.
.	.
.	.
.	.

IF A SEAL IS PRESENT ON THIS SHEET IT HAS BEEN ELECTRONICALLY SEALED AND DATED.

JEFFERSON COUNTY PUBLIC WORKS
DEPARTMENT
P.O. BOX 100
HILLSBORO, MO 63050
(636-797-5340) PHONE
(636-797-5565) FAX

ABNA
4140 LINDELL BOULEVARD
ST. LOUIS, MO 63108
PH. 314-454-0222
CERTIFICATE/LICENSE NO. 001501

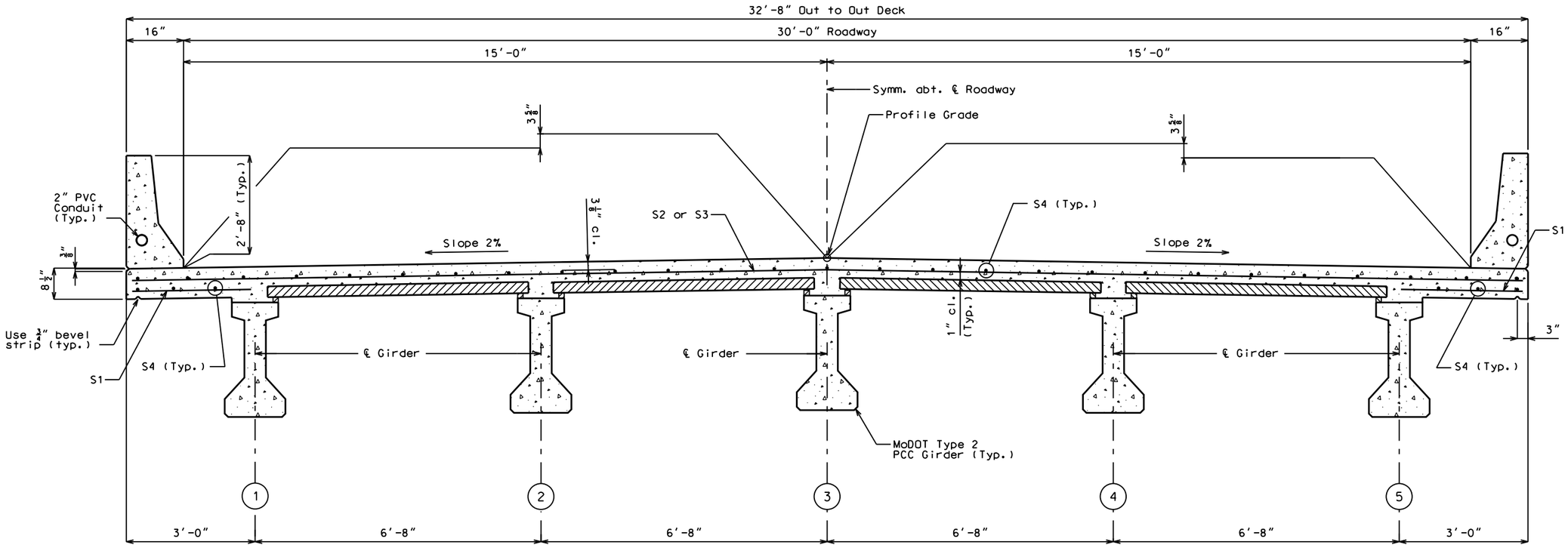

TYPICAL CROSS SECTION

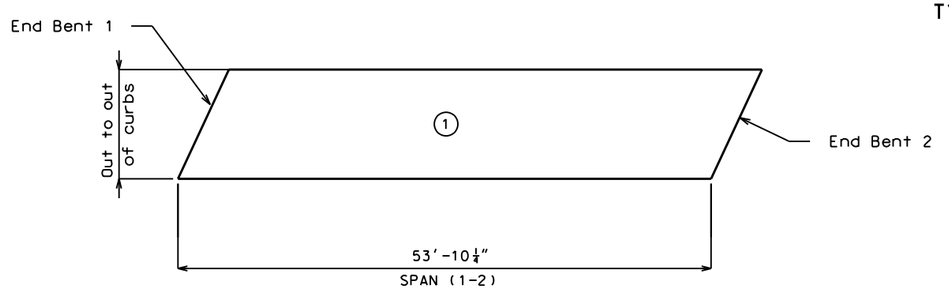

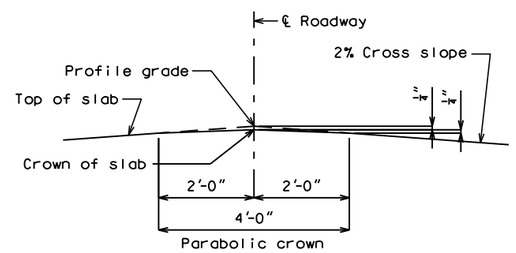

DETAIL A

	Sequence of Pours		Min. rate of pour cu. yds./hr.
	Direction		With retarder
Basic sequence	1	2	25

Note: The contractor shall furnish an approved retarder to retard the set of the concrete to 2.5 hours. and shall pour and satisfactorily finish the slab pours at the rate given.

The concrete diaphragm at the intermediate bents and integral end bents shall be poured a minimum of 30 minutes and a maximum of 2 hours before the slab is poured.

SLAB POURING SEQUENCE

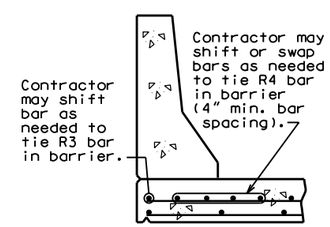

TYPICAL SLAB SECTION

Detailed Oct 2019
Checked Oct 2019

Note: This drawing is not to scale. Follow dimensions.

STATE OF MISSOURI
STEPHEN ALSBURY
NUMBER E-24698
REGISTERED PROFESSIONAL ENGINEER

DATE PREPARED 12/12/2019
STATE MO
SHEET NO. 2-4
ROUTE H-HOUSESPRINGS
COUNTY JEFFERSON
JOB NO. 19-6043
PROJECT NO. .
BRIDGE NO. .

DATE	DESCRIPTION
.	.
.	.
.	.
.	.
.	.
.	.

IF A SEAL IS PRESENT ON THIS SHEET IT HAS BEEN ELECTRONICALLY SEALED AND DATED.

JEFFERSON COUNTY PUBLIC WORKS DEPARTMENT
P.O. BOX 100
HILLSBORO, MO 63050
(636-797-5340) PHONE
(636-797-5565) FAX

ABNA
4140 LINDELL BOULEVARD
ST. LOUIS, MO 63108
PH. 314-454-0222
CERTIFICATE/LICENSE NO. 001501

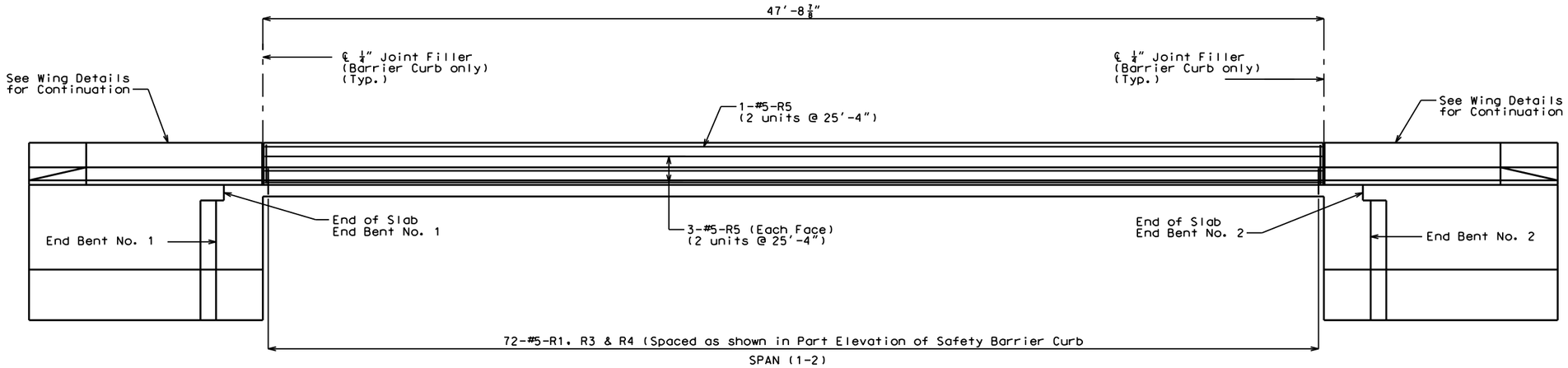

ELEVATION OF SAFETY BARRIER CURB

(Left barrier curb shown, right barrier curb similar)

Longitudinal dimensions are horizontal.

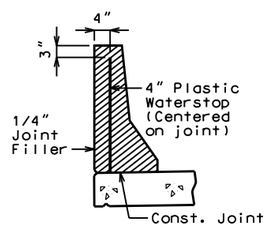

PLASTIC WATERSTOP DETAIL

Plastic waterstop shall be placed in all safety barrier curb filled joints, except structures with superelevation, use on all lower safety barrier curb joints only.

Cost of plastic waterstop, complete in place, will be considered completely covered by the contract unit price for Safety Barrier Curb.

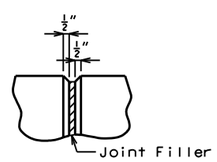

FILLED JOINT DETAIL

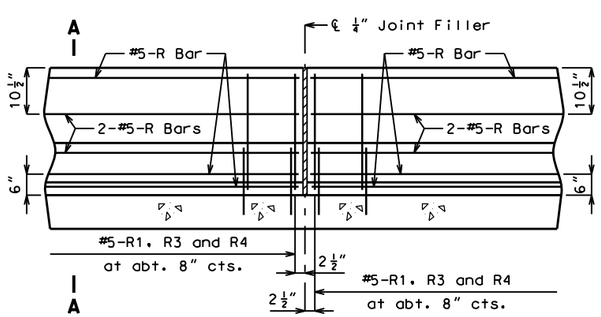

PART ELEVATION OF SAFETY BARRIER CURB

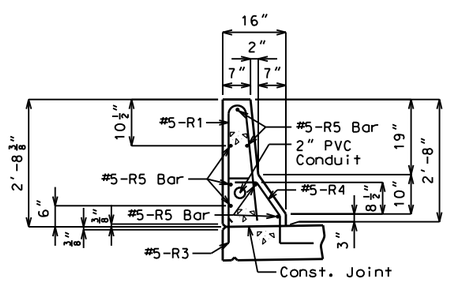

SECTION A-A

Use a minimum lap of 3'-1" for #5 horizontal safety barrier curb bars.

The cross-sectional area above the slab = 2.27 sq. ft.

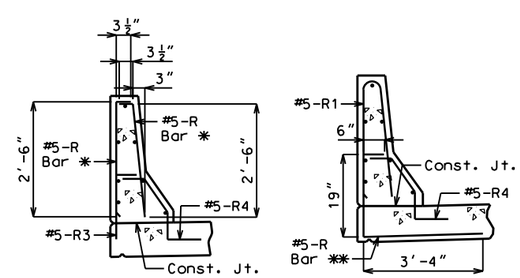

R-BAR PERMISSIBLE ALTERNATE SHAPE

* The R1 bar may be separated into two bars as shown, at the contractor's option, only when slip forming is not used. (All dimensions are out to out.)

** The R3 bar and #5 bottom transverse slab bar in cantilever (P/S panels only) combination may be furnished as one bar as shown, at the contractor's option.

General Notes

Top of safety barrier curb shall be built parallel to grade with barrier curb joints (except at end bents) normal to grade.

All exposed edges of safety barrier curb shall have either a 1/2-inch radius or a 3/8-inch bevel, unless otherwise noted.

Payment for all concrete and reinforcement, complete in place, will be considered completely covered by the contract unit price for Safety Barrier Curb per linear foot.

Concrete in the safety barrier curb shall be Class B-1.

Measurement of safety barrier curb is to the nearest linear foot for each structure, measured along the outside top of slab from end of wing to end of wing.

Concrete traffic barrier delineators shall be placed on top of the safety barrier curb as shown on Missouri Standard Plans 617.10 and in accordance with Sec 617. Delineators on bridges with two-lane, two-way traffic shall have retroreflective sheeting on both sides. Concrete traffic barrier delineators will be considered completely covered by the contract unit price for Safety Barrier Curb.

Except for Section A-A, conduit is not shown for clarity.

CONVENTIONAL - FORMED SAFETY BARRIER CURB

Detailed Oct 2019
Checked Oct 2019

Note: This drawing is not to scale. Follow dimensions.

STATE OF MISSOURI
STEPHEN ALSBURY
NUMBER E-24698
REGISTERED PROFESSIONAL ENGINEER

DATE PREPARED	
12/12/2019	
STATE	SHEET NO.
MO	25
ROUTE	
H-HOUSESPRINGS	
COUNTY	
JEFFERSON	
JOB NO.	
19-6043	
PROJECT NO.	
.	
BRIDGE NO.	
.	

DATE	DESCRIPTION
.	.
.	.
.	.
.	.
.	.
.	.
.	.
.	.

IF A SEAL IS PRESENT ON THIS SHEET IT HAS BEEN ELECTRONICALLY SEALED AND DATED.

JEFFERSON COUNTY PUBLIC WORKS DEPARTMENT
P.O. BOX 100
HILLSBORO, MO 63050
(636-797-5340) PHONE
(636-797-5565) FAX

ABNA
4140 LINDELL BOULEVARD
ST. LOUIS, MO 63108
PH. 314-454-0222
CERTIFICATE/LICENSE NO. 001501

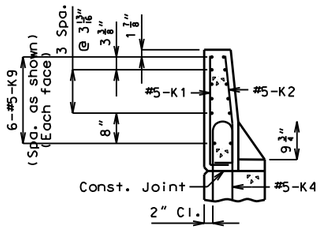

SECTION A-A

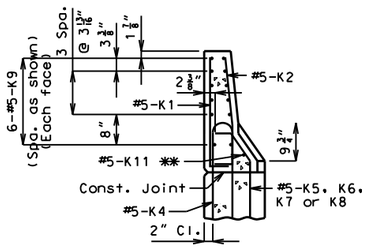

SECTION B-B

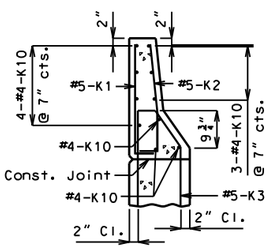

SECTION C-C

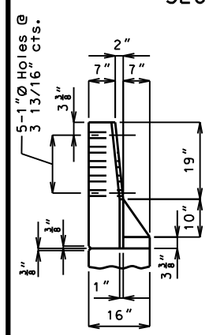

ELEVATION G-G

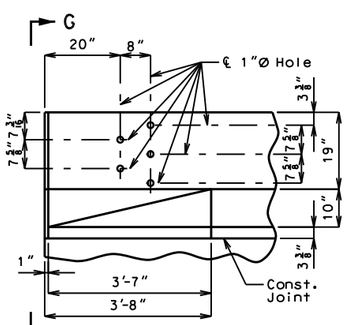

ELEVATION

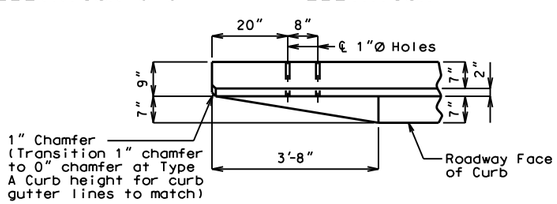

DETAIL OF GUARD RAIL ATTACHMENT

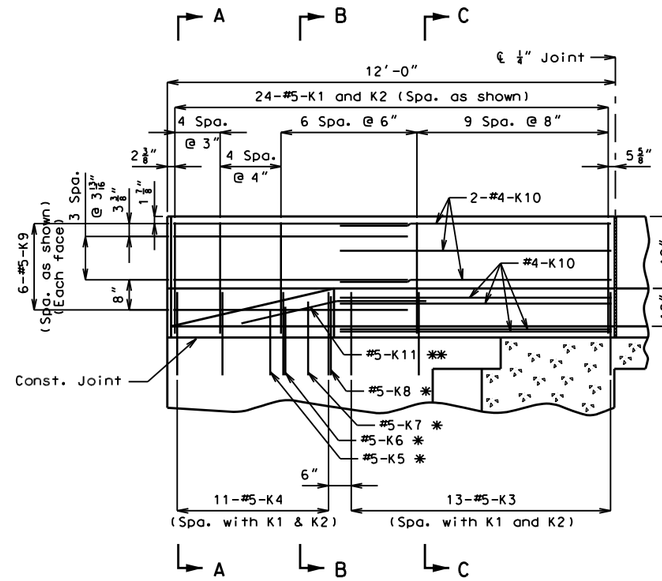

ELEVATION

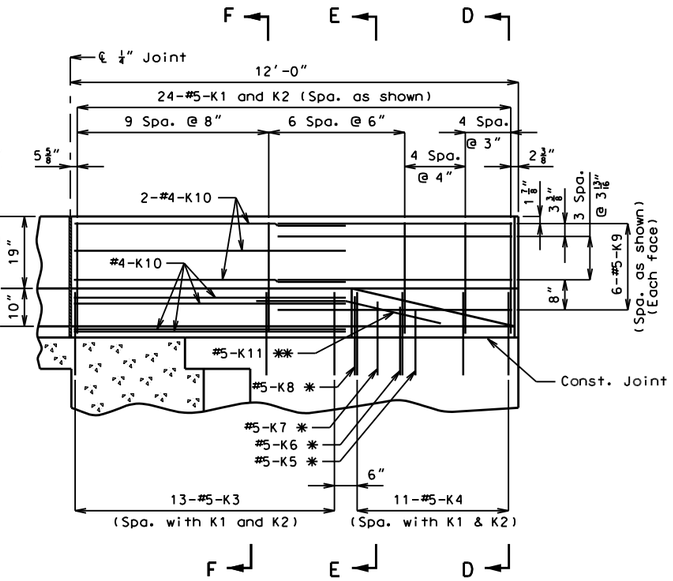

ELEVATION

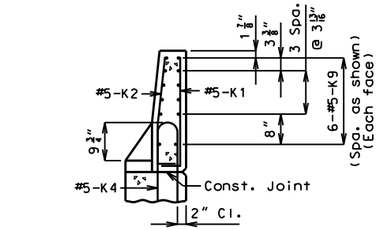

SECTION D-D

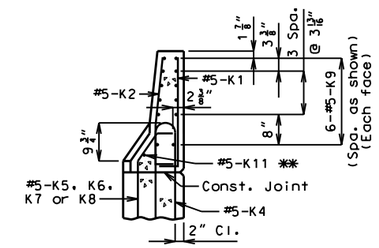

SECTION E-E

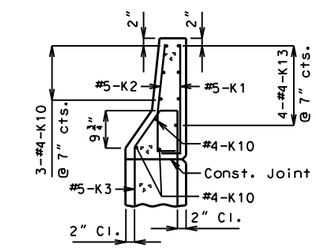

SECTION F-F

* Spaced with #5-K4 bars and embed 27" into end bent.
** Fit bar to follow transition face of curb.

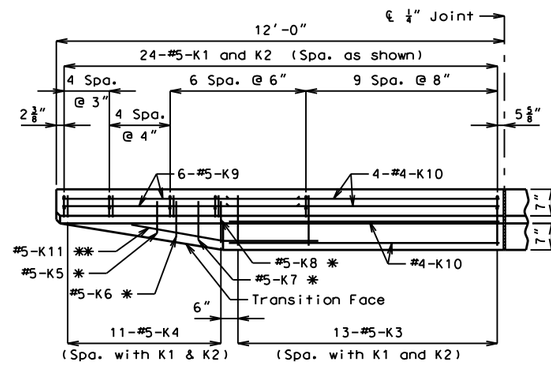

PLAN

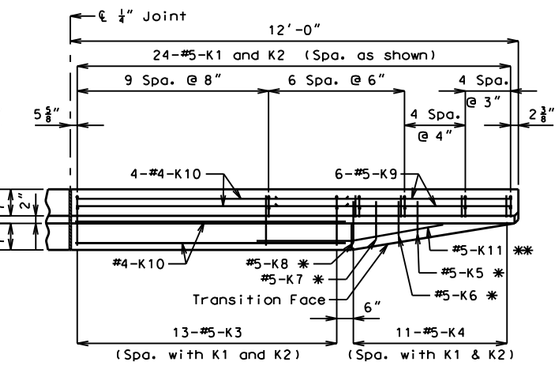

PLAN

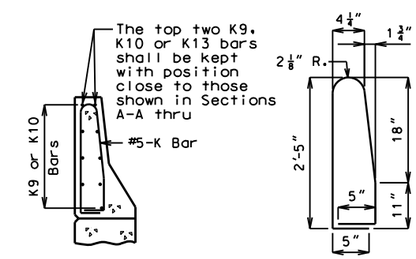

K1-K2 BAR PERMISSIBLE ALTERNATE SHAPE

(K3 or K4 thru K8 bars not shown for clarity)

The K1 and K2 bar combination may be furnished as one bar as shown, at the contractor's option.

Note: Use a minimum lap of 2'-7" between K9 and K10 bars.

Concrete traffic barrier delineators shall be placed on top of the safety barrier curb as shown on Missouri Standard Plans 617.10 and in accordance with Sec 617. Delineators on bridges with two-lane, two way traffic shall have retroreflective sheeting on both sides. Concrete traffic barrier delineators will be considered completely covered by the contract unit price for Safety Barrier Curb.

CONVENTIONAL-FORMED SAFETY BARRIER CURB AT END BENTS

(Left barrier curb shown, right barrier curb similar)

Detailed Oct 2019
Checked Oct 2019

Note: This drawing is not to scale. Follow dimensions.

STATE OF MISSOURI
STEPHEN ALSBURY
NUMBER E-24698
REGISTERED PROFESSIONAL ENGINEER

DATE PREPARED	
12/12/2019	
STATE	SHEET NO.
MO	26
ROUTE	
H-HOUSESPRINGS	
COUNTY	
JEFFERSON	
JOB NO.	
19-6043	
PROJECT NO.	
.	
BRIDGE NO.	
.	

DATE	DESCRIPTION
.	.
.	.
.	.
.	.
.	.
.	.
.	.

IF A SEAL IS PRESENT ON THIS SHEET IT HAS BEEN ELECTRONICALLY SEALED AND DATED.

JEFFERSON COUNTY PUBLIC WORKS DEPARTMENT
P.O. BOX 100
HILLSBORO, MO 63050
(636-797-5340) PHONE
(636-797-5565) FAX

HABNA
4140 LINDELL BOULEVARD
ST. LOUIS, MO 63108
PH. 314-454-0222
CERTIFICATE/LICENSE NO. 001501

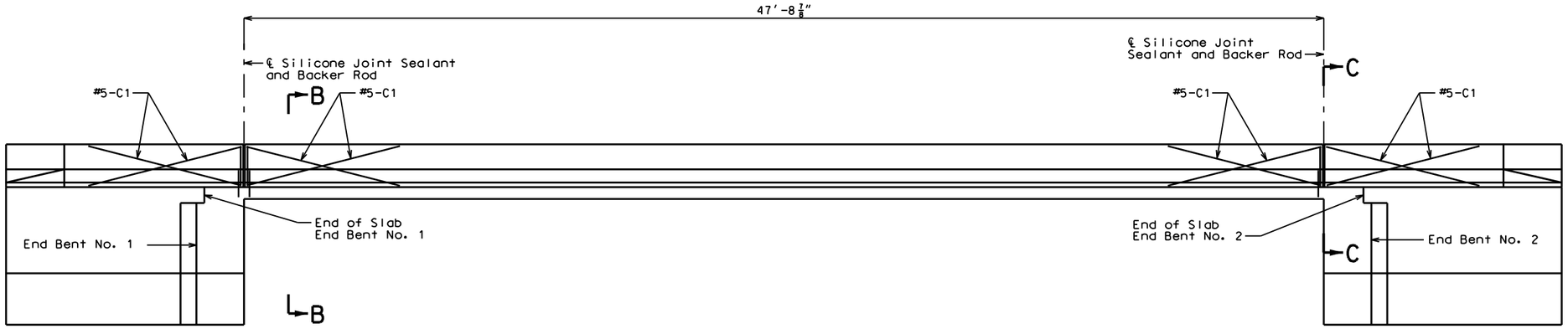

TYPICAL ELEVATION OF SAFETY BARRIER CURB AT SUPPORT LOCATIONS

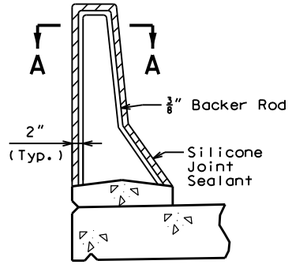

SECTION THRU JOINT

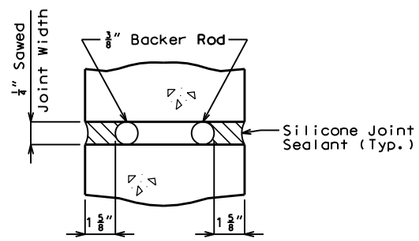

SECTION A-A

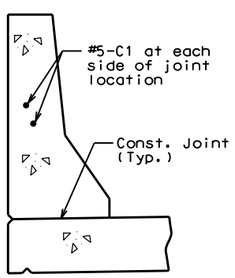

SECTION B-B

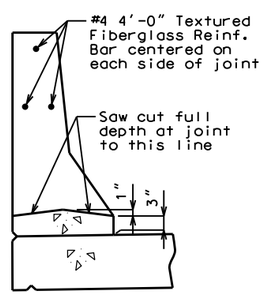

SECTION C-C

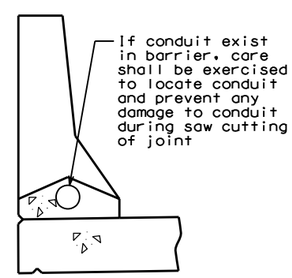

SECTION C-C
(Use when conduit required)

OPTIONAL SLIP-FORMED SAFETY BARRIER CURB

Use R bars and K bars similarly as shown for conventional-formed safety barrier curb.

General Notes:

Top of safety barrier curb shall be built parallel to grade with barrier curb joints (except at end bents) normal to grade.

All exposed edges of safety barrier curb shall have either a 1/2-inch radius or a 3/8-inch bevel, unless otherwise noted.

Payment for all concrete and reinforcement, complete in place, will be considered completely covered by the contract unit price for Safety Barrier Curb per linear foot.

Concrete in the safety barrier curb shall be Class B-1.

Measurement of safety barrier curb is to the nearest linear foot for each structure, measured along the outside top of slab from end of wing to end of wing.

Concrete traffic barrier delineators shall be placed on top of the safety barrier curb as shown on Missouri Standard Plans 617.10 and in accordance with Sec 617. Delineators on bridges with two-lane, two-way traffic shall have retroreflective sheeting on both sides. Concrete traffic barrier delineators will be considered completely covered by the contract unit price for Safety Barrier Curb.

Joint sealant and backer rods shall be used on all slip-form barrier curbs instead of joint filler and shall be in accordance with Sec 717 for silicone joint sealant for saw cut and formed joints.

Plastic waterstop shall not be used with slip-form option.

For slip-form option, all sides of the safety barrier curb shall have a vertically broomed finish and the curb top shall have a transversely broomed finish.

Cost of silicone joint sealant and backer rod, complete in place, will be considered completely covered by the contract unit price for Safety Barrier Curb.

Detailed Oct 2019
Checked Oct 2019

Note: This drawing is not to scale. Follow dimensions.

STATE OF MISSOURI
STEPHEN ALSBURY
NUMBER E-24698
REGISTERED PROFESSIONAL ENGINEER

DATE PREPARED	
12/12/2019	
STATE MO	SHEET NO. 2-7
ROUTE H-HOUSESPRINGS	
COUNTY JEFFERSON	
JOB NO. 19-6043	
PROJECT NO. .	
BRIDGE NO. .	

DATE	DESCRIPTION
.	.
.	.
.	.
.	.
.	.
.	.
.	.

JEFFERSON COUNTY PUBLIC WORKS DEPARTMENT
P.O. BOX 100
HILLSBORO, MO 63050
(636-797-5340) PHONE
(636-797-5565) FAX

ABNA
4140 LINDELL BOULEVARD
ST. LOUIS, MO 63108
PH. 314-454-0222
CERTIFICATE/LICENSE NO. 001501

IF A SEAL IS PRESENT ON THIS SHEET IT HAS BEEN ELECTRONICALLY SEALED AND DATED.

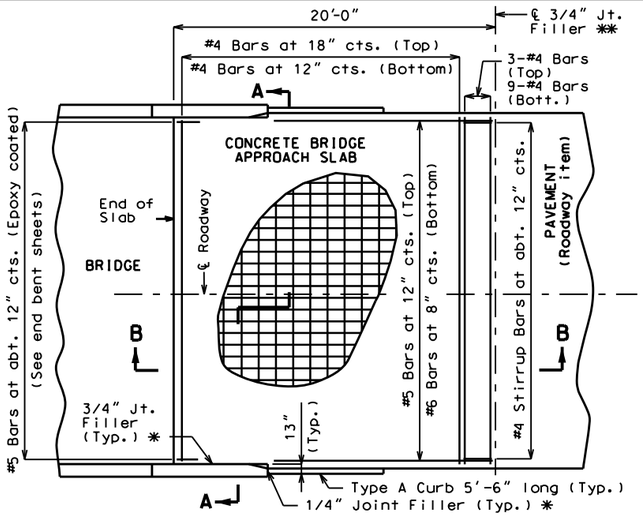

PART PLAN OF SQUARED STRUCTURE

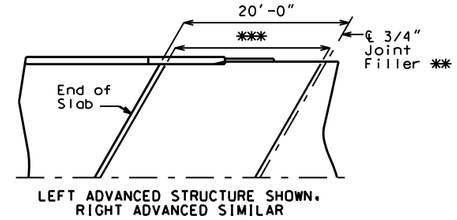

PART PLAN OF SKEWED STRUCTURE

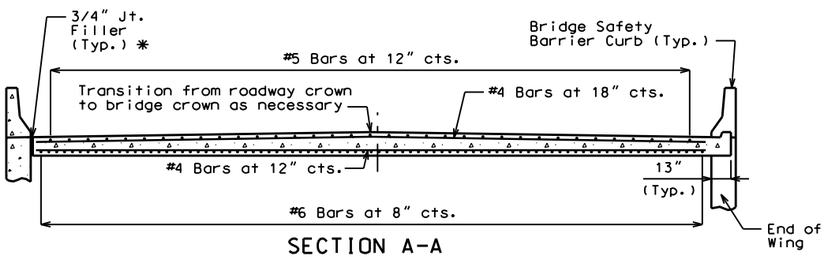

SECTION A-A

With the approval of the engineer, the contractor may crown the bottom of the approach slab to match the crown of the roadway surface.

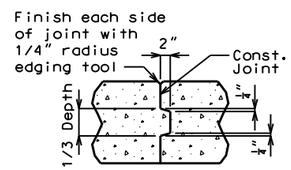

CONCRETE CONST. JOINT DETAIL

(If required)

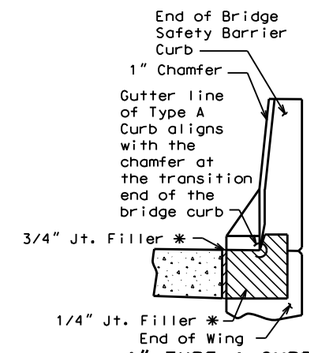

4" TYPE A CURB

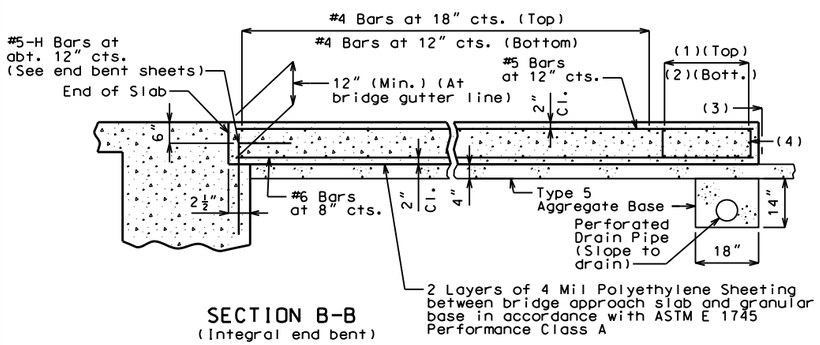

SECTION B-B

(Integral end bent)

(1) 3-#4 Bars

(2) 9-#4 Bars

(3) ℄ 3/4" Jt. Filler **

(4) #4 Stirrup Bars at abt. 12" cts.: 2'-0"x 8" (Min.) out to out; Actual length = 5'-10" (Min.); 90° stirrup hook at bottom; Stirrup height (8") and actual length vary due to crown.

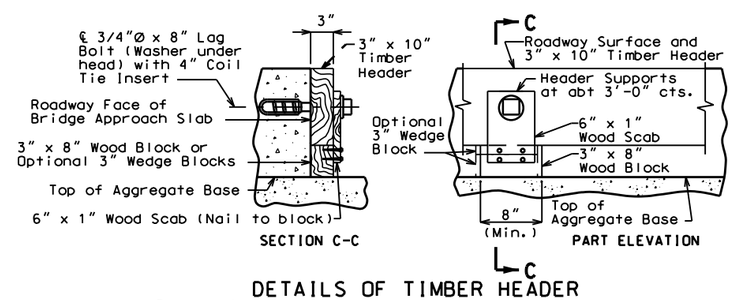

DETAILS OF TIMBER HEADER

Remove timber header when concrete pavement is placed.

General Notes:

The contractor shall pour and satisfactorily finish the bridge slab before placing the bridge approach slab.

Drain pipe may be either 6" diameter corrugated metallic-coated pipe underdrain, 4" diameter corrugated polyvinyl chloride (PVC) drain pipe, or 4" diameter corrugated polyethylene (PE) drain pipe.

All concrete for the bridge approach slab shall be in accordance with Sec 503 (f'c = 4,000 psi).

The reinforcing steel in the bridge approach slab shall be epoxy coated Grade 60 with fy = 60,000 psi.

Longitudinal construction joints in bridge approach slab shall be aligned with longitudinal construction joints in bridge slab.

Minimum clearance to reinforcing steel shall be 1½", unless otherwise shown.

The reinforcing steel in the bridge approach slab shall be continuous. The transverse reinforcing steel may be made continuous by lap splicing the #4 bars 23".

All joint filler shall be in accordance with Sec 1057 for preformed fiber expansion joint filler except as noted.

Payment for furnishing all materials, labor and excavation necessary to construct the concrete bridge approach slab, including the timber header, underdrain, Type 5 aggregate base, joint filler, and all other appurtenances and incidental work as shown on this sheet, complete in place, will be considered completely covered by the contract unit price for Bridge Approach Slab (Minor Road) per square yard.

See Missouri Standard Plans Drawing 609.00 for details of Type A Curb.

* Seal joint between vertical face of bridge approach slab and wing with "Silicone Joint Sealant for Saw Cut and Formed Joints" in accordance with Sec 717.

** Except not allowed with asphalt pavement.

*** Transverse reinforcing bars shall be placed parallel to end bents.

Alternate Asphalt option Not Allowed.

STATE OF MISSOURI
STEPHEN ALSBURY
NUMBER E-24698
REGISTERED PROFESSIONAL ENGINEER

DATE PREPARED	
12/12/2019	
STATE	SHEET NO.
MO	28
ROUTE	
H-HOUSESPRINGS	
COUNTY	
JEFFERSON	
JOB NO.	
19-6043	
PROJECT NO.	
.	
BRIDGE NO.	
.	

DATE	DESCRIPTION
.	.
.	.
.	.
.	.
.	.
.	.
.	.

IF A SEAL IS PRESENT ON THIS SHEET IT HAS BEEN ELECTRONICALLY SEALED AND DATED.

JEFFERSON COUNTY PUBLIC WORKS DEPARTMENT
P.O. BOX 100
HILLSBORO, MO 63050
(636-797-5340) PHONE
(636-797-5565) FAX

ABNA
4140 LINDELL BOULEVARD
ST. LOUIS, MO 63108
PH. 314-454-0222
CERTIFICATE/LICENSE NO. 001501

Detailed Oct 2019
Checked Oct 2019

Note: This drawing is not to scale. Follow dimensions.

DETAILS OF BRIDGE APPROACH SLAB (MINOR ROAD)

J:\2019\6043\Cadd\Design\Bridge\19-6043_019_Approach Slab.dgn 7:50:01 AM 12/12/2019

BILL OF REINFORCING STEEL

NO. REQ'D.	MARK NO. SIZE	MARK NO. MARK	LOCATION	EPOXY (E)	SHAPE NO.	STIRRUP (S)	SUBSTR. (X)	VARIES (V)	NO. EACH	B FT. IN.	C FT. IN.	D FT. IN.	E FT. IN.	F FT. IN.	H FT. IN.	K FT. IN.	NOMINAL LENGTH FT. IN.	ACTUAL LENGTH FT. IN.	WEIGHT LBS.
			END BENT 1																
8	6	F101	WINGWALL		23					14.000	4 10.000	14.000	7.500	11.750	7.500	11.750	7 2	7 1	85
8	6	F102	WINGWALL		23					14.000	3 0.000	14.000	11.750	7.500	11.750	11.750	5 4	5 3	63
3	6	F103	BEAM		32						4 6.000	2 0.000			21.875	10.250	6 6	6 2	28
3	6	F104	BEAM		15					2 0.000	4 6.000				21.875	10.250	6 6	6 5	29
10	6	H101	BEAM		20					35 8.000							35 8	35 8	536
			NOT USED																
6	6	H103	DIAPHRAGM		20					2 3.000							2 3	2 3	20
12	6	H104	DIAPHRAGM		20					5 6.000							5 6	5 6	99
3	6	H105	DIAPHRAGM		20					35 8.000							35 8	35 8	161
4	6	H106	DIAPHRAGM	E	20					35 8.000							35 8	35 8	214
5	5	H107	STRAND TIE		23					15.000	17.000	15.000	6.375	13.500	5 3.750	13.625	3 11	3 10	20
33	5	H108	APP HAUNCH	E	19					2 0.000	15.000						3 3	3 1	106
2	8	H109	WINGWALL	E	20					11 6.000							11 6	11 6	61
6	8	H110	WINGWALL		20					11 6.000							11 6	11 6	184
18	6	H111	WINGWALL		20					10 6.000							10 6	10 6	284
2	8	H112	WINGWALL	E	20					11 6.000							11 6	11 6	61
6	8	H113	WINGWALL		20					11 6.000							11 6	11 6	184
18	6	H114	WINGWALL		20					10 6.000							10 6	10 6	284
10	5	U102	BEAM		13	S				3 0.000	2 9.000	3 0.000	2 9.000				12 5	12 1	126
28	5	U101	BEAM		10						5 3.000	3 0.000					13 6	13 3	387
6	5	U103	BEAM		10						2 9.000	3 0.000					8 6	8 3	52
32	6	U104	DIAPHRAGM		19					2 4.500	2 9.000						5 2	5 0	240
32	5	U105	DIAPHRAGM	E	10						3 3.000	2 1.000					8 7	8 4	278
46	6	U106	DIAPHRAGM	E	19					3 0.000	4 9.000						7 9	7 7	524
12	5	V101	BEAM		20					5 2.000							5 2	5 2	65
15	6	V102	DIAPHRAGM		20					2 6.000							2 6	2 6	56
20	6	V103	WINGWALL		20					5 11.000							5 11	5 11	178
20	6	V104	WINGWALL		20					6 4.000							6 4	6 4	190
			END BENT 2																
9	6	F201	WINGWALL		23					14.000	4 10.000	14.000	7.500	11.750	7.500	11.750	7 2	7 1	96
9	6	F202	WINGWALL		23					14.000	3 0.000	14.000	11.750	7.500	11.750	7.500	5 4	5 3	71
3	6	F203	BEAM		32						4 6.000	2 0.000			21.875	10.250	6 6	6 2	28
3	6	F204	BEAM		15					2 0.000	4 6.000				21.875	10.025	6 6	6 5	29
10	6	H201	BEAM		20					35 8.000							35 8	35 8	536
			NOT USED																
6	6	H203	DIAPHRAGM		20					2 3.000							2 3	2 3	20
12	6	H204	DIAPHRAGM		20					5 6.000							5 6	5 6	99
3	6	H205	DIAPHRAGM		20					35 8.000							35 8	35 8	161
4	6	H206	DIAPHRAGM	E	20					35 8.000							35 8	35 8	214
5	5	H207	STRAND TIE		23					15.000	17.000	15.000	6.375	13.500	6.375	13.625	3 11	3 11	20
33	5	H208	APP HAUNCH	E	19					2 0.000	15.000						3 3	3 1	106
2	8	H209	WINGWALL	E	20					11 6.000							11 6	11 6	61
6	8	H210	WINGWALL		20					11 6.000							11 6	11 6	184
20	6	H211	WINGWALL		20					10 6.000							10 6	10 6	315
2	8	H212	WINGWALL	E	20					11 6.000							11 6	11 6	61
6	8	H213	WINGWALL		20					11 6.000							11 6	11 6	184
20	6	H214	WINGWALL		20					11 0.000							11 0	11 0	330
28	5	U201	BEAM		10						5 3.000	3 0.000					13 6	13 3	387
10	5	U202	BEAM		13	S				3 0.000	2 9.000	3 0.000	2 9.000				12 5	12 1	126
6	5	U203	BEAM		10						2 9.000	3 0.000					8 6	8 3	52
32	6	U204	DIAPHRAGM		19					2 4.500	2 9.000						5 2	4 12	240
32	5	U205	DIAPHRAGM	E	10						3 3.000	2 1.000					8 7	8 4	278
46	6	U206	DIAPHRAGM	E	19					3 0.000	4 9.000						7 9	7 7	524
12	5	V201	BEAM		20					5 2.000							5 2	5 2	65
15	6	V202	DIAPHRAGM		20					2 6.000							2 6	2 6	56
20	6	V203	WINGWALL		20					6 9.000							6 9	6 9	203
20	6	V204	WINGWALL		20					6 6.000							6 6	6 6	195

BILL OF REINFORCING STEEL

NO. REQ'D.	MARK NO. SIZE	MARK NO. MARK	LOCATION	EPOXY (E)	SHAPE NO.	STIRRUP (S)	SUBSTR. (X)	VARIES (V)	NO. EACH	B FT. IN.	C FT. IN.	D FT. IN.	E FT. IN.	F FT. IN.	H FT. IN.	K FT. IN.	NOMINAL LENGTH FT. IN.	ACTUAL LENGTH FT. IN.	WEIGHT LBS.
			SLAB																
96	5	S1	SLAB	E	20					2 10.000							2 10	2 10	284
76	6	S2	SLAB	E	20					32 5.000							32 5	32 5	3700
56	6	S3	SLAB	E	20			V	2	2 2.000							2 2	2 2	
			INCR=13IN							31 6.000							31 6	31 6	1416
66	5	S4	SLAB	E	20					27 7.000							27 7	27 7	1899
			BARRIERS																
96	5	K1	BARRIER TRAN	E	19					2 5.000	5.125						2 10	2 9	275
96	5	K2	BARRIER TRAN	E	14					5.125	11.125				2.000	17.875	1 4	1 3	125
52	5	K3	BARRIER TRAN	E	27					3 4.125	5.125	12.000	2 6.250		9.875	6.875	7 3	7 1	384
44	5	K4	BARRIER TRAN	E	7					3 4.125	6.000						6 12	6 11	317
4	5	K5	BARRIER TRAN	E	25					2 10.750	6.875	4.375			5.500	4.000	3 10	3 9	16
8	5	K6	BARRIER TRAN	E	25					2 9.750	8.000	4.375			6.500	4.500	3 10	3 9	31
4	5	K7	BARRIER TRAN	E	25					2 8.250	9.875	4.375			7.875	5.500	3 11	3 10	16
4	5	K8	BARRIER TRAN	E	25					2 6.875	11.125	4.375			9.250	6.500	3 10	3 10	16
48	5	K9	BARRIER TRAN	E	20					5 6.000							5 6	5 6	275
40	4	K10	BARRIER TRAN	E	20					9 0.000							9 0	9 0	240
4	5	K11	BARRIER TRAN	E	8					2 3.000					2 2.000	2.375	4 6	4 6	19
144	5	R1	BARRIER	E	26					2 6.000	4.250				2 6.000	3.000	5 4	5 3	789
144	5	R3	BARRIER	E	19					17.000	6.000						1 11	1 9	263
144	5	R4	BARRIER	E	27						6.000	11.250	7.000	12.000	9.250	6.375	3 0	2 10	426
28	5	R5	BARRIER	E	20					25 4.000							25 4	25 4	740
16	5	C1	SLIP FORM	E	20					10 0.000							10 0	10 0	167

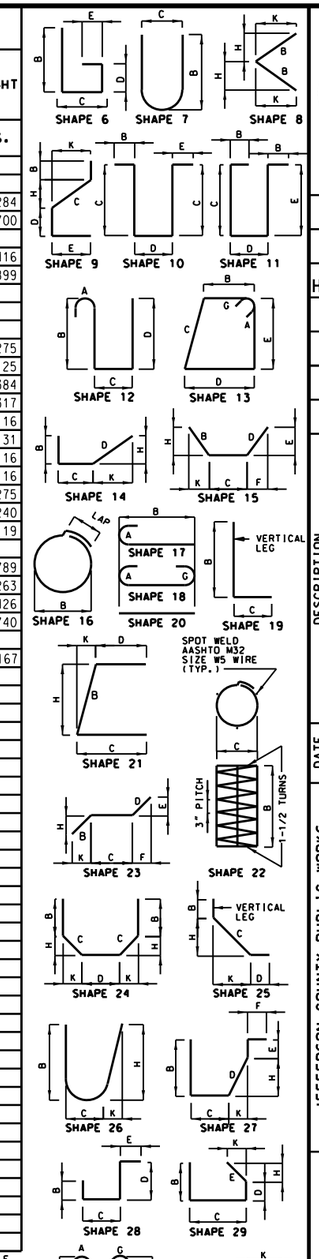

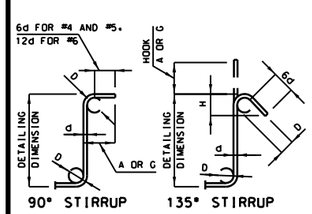

STIRRUP HOOK DIMENSIONS				
GRADES 40 - 50 - 60 KSI				
BAR SIZE	D (IN.)	90° HOOK	135° HOOK	
		HOOK A OR G	HOOK A OR G	APPROX. H
#4	2"	4 1/2"	4 1/2"	3"
#5	2 1/2"	6"	5 1/2"	3 3/4"
#6	4 1/2"	12"	8"	4 1/2"

NOTE: UNLESS OTHERWISE NOTED. DIAMETER "D" IS THE SAME FOR ALL BENDS AND HOOKS ON A BAR.

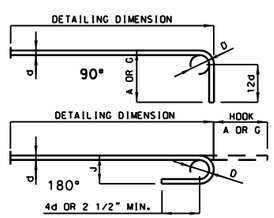

END HOOK DIMENSIONS				
BAR SIZE	D (IN.)	ALL GRADES		
		180° HOOKS		90° HOOKS
		A OR G	J	A OR G
#3	2 1/4"	5"	3"	6"
#4	3"	6"	4"	8"
#5	3 3/4"	7"	5"	10"
#6	4 1/2"	8"	6"	12"
#7	5 1/4"	10"	7"	14"
#8	6"	11"	8"	16"
#9	9 1/2"	15"	11 3/4"	19"
#10	10 3/4"	17"	13 1/4"	22"
#11	12"	19"	14 3/4"	2'-0"
#14	18 1/4"	2'-3"	21 3/4"	2'-7"

NOTE:
ALL STANDARD HOOKS AND BENDS OTHER THAN 180 DEGREE ARE TO BE BENT WITH SAME PROCEDURE AS FOR 90 DEGREE STANDARD HOOKS.
HOOKS AND BENDS SHALL BE IN ACCORDANCE WITH THE PROCEDURES AS SHOWN ON THIS SHEET.
E = EPOXY COATED REINFORCEMENT.
S = STIRRUP.
X = BAR IS INCLUDED IN SUBSTRUCTURE QUANTITIES.
V = BAR DIMENSIONS VARY IN EQUAL INCREMENTS BETWEEN DIMENSIONS SHOWN ON THIS LINE AND THE FOLLOWING LINE.
NO. EA. = NUMBER OF BARS OF EACH LENGTH.
NOMINAL LENGTHS ARE BASED ON OUT TO OUT DIMENSIONS SHOWN IN BENDING DIAGRAMS AND ARE LISTED FOR FABRICATORS USE. (NEAREST INCH)
ACTUAL LENGTHS ARE MEASURED ALONG CENTERLINE BAR TO THE NEAREST INCH.
PAYWEIGHTS ARE BASED ON ACTUAL LENGTHS.
FOUR ANGLE OR CHANNEL SPACERS ARE REQUIRED FOR EACH COLUMN SPIRAL. SPACERS ARE TO BE PLACED ON INSIDE OF SPIRALS. LENGTH AND WEIGHT OF COLUMN SPIRALS DO NOT INCLUDE SPLICES OR SPACERS.
REINFORCING STEEL (GRADE 60) FY = 60,000 PSI.

Detailed Oct 2019
Checked Oct 2019

Note: This drawing is not to scale. Follow dimensions.

STATE OF MISSOURI
STEPHEN ALSBURY
NUMBER E-24698
REGISTERED PROFESSIONAL ENGINEER

DATE PREPARED 12/12/2019
STATE MO
SHEET NO. 29
ROUTE H-HOUSESPRINGS
COUNTY JEFFERSON
JOB NO. 19-6043
PROJECT NO. .
BRIDGE NO. .

DATE	DESCRIPTION
.	.
.	.
.	.
.	.
.	.
.	.

IF A SEAL IS PRESENT ON THIS SHEET IT HAS BEEN ELECTRONICALLY SEALED AND DATED.

JEFFERSON COUNTY PUBLIC WORKS DEPARTMENT
P.O. BOX 100
HILLSBORO, MO 63050
(636-797-5340) PHONE
(636-797-5565) FAX

ABNA
4140 LINDELL BOULEVARD
ST. LOUIS, MO 63108
PH. 314-454-0222
CERTIFICATE/LICENSE NO. 001501

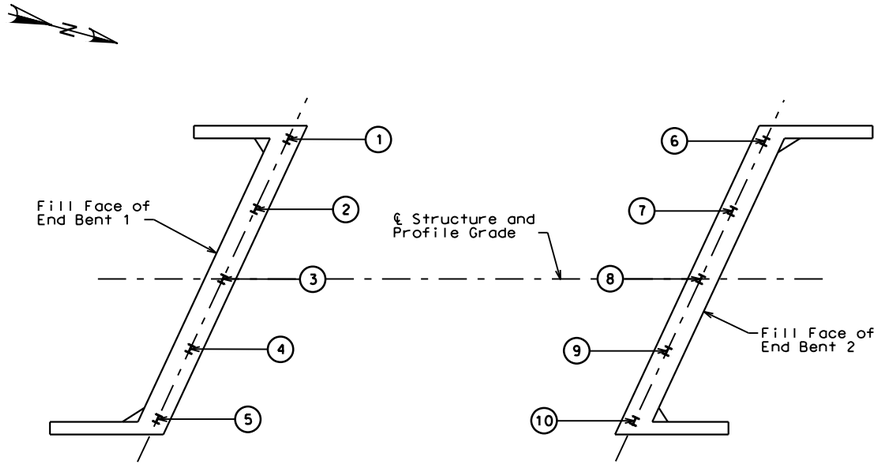

PART PLAN SHOWING
PILE NUMBERING FOR RECORDING
"AS BUILT PILE" DATA

NOTE: INDICATE IN REMARKS COLUMN:
A.) IF PILING WERE DRIVEN TO PRACTICAL REFUSAL.
B.) PILE BATTER IF OTHER THAN SHOWN ON BENT DETAIL SHEET.
C.) TYPE OF PILING USED.

NOTE: THIS SHEET TO BE COMPLETED BY CONSTRUCTION PERSONNEL.

"AS BUILT PILE" DATA

PILE NO.	LENGTH IN PLACE (FT.)	COMPUTED BEARING (KIPS)	REMARKS
			END BENT NO. 1
1			
2			
3			
4			
5			

"AS BUILT PILE" DATA

PILE NO.	LENGTH IN PLACE (FT.)	COMPUTED BEARING (KIPS)	REMARKS
			END BENT NO. 2
6			
7			
8			
9			
10			

Detailed Oct 2019
Checked Oct 2019

Note: This drawing is not to scale. Follow dimensions.

STATE OF MISSOURI
STEPHEN ALSBURY
NUMBER E-24698
REGISTERED PROFESSIONAL ENGINEER

DATE PREPARED 12/12/2019
STATE MO
SHEET NO. 30
ROUTE H-HOUSESPRINGS
COUNTY JEFFERSON
JOB NO. 19-6043
PROJECT NO. .
BRIDGE NO. .

DATE	DESCRIPTION
.	.
.	.
.	.
.	.
.	.
.	.
.	.

IF A SEAL IS PRESENT ON THIS SHEET IT HAS BEEN ELECTRONICALLY SEALED AND DATED.

JEFFERSON COUNTY PUBLIC WORKS
DEPARTMENT
P.O. BOX 100
HILLSBORO, MO 63050
(636-797-5340) PHONE
(636-797-5565) FAX

ABNA
4140 LINDELL BOULEVARD
ST. LOUIS, MO 63108
PH. 314-454-0222
CERTIFICATE/LICENSE NO. 001501

DAILY FIELD REPORT BOREHOLE LOG

SHEET: 1 of 1
PROJECT NUMBER: 19-6043
HOLE NUMBER: BH-01A

PROJECT: Jefferson County MOU 19-2
LOCATION: Hillsboro-House Springs Rd @ Belew Creek
COORDINATES: 10ft South offset from surveyed mark
DRILLING CONTRACTOR: Bulldog
DRILL MAKE & MODEL: CME 55LC
DEPTH TOP OF ROCK: 10.3'
DEPTH CASING & SIZE:
HOLE SIZE: 3.75"
ELEVATION: 592'
DEPTH BOTTOM OF HOLE: 25'
ANGLE FROM VERT. AND BEARING:
WATER LEVEL: ~9'
FLUIDS AND ADDITIVES:
DATE START: 8/7/2019
DATE FINISH: 8/7/2019
LOGGER: mdw

ELEVATION	DEPTH BELOW SURFACE (Feet)	SAMPLE INTERVAL	SAMPLE TYPE & NO.	SAMPLE RECOVERY	STANDARD PENETRATION TEST RESULT 6"-6"-6" (N)	STIFFNESS	Pocket Pen - tons/ft²	MOISTURE %	LIQUID LIMIT	PLASTIC LIMIT	PLASTICITY INDEX	SYMBOLIC LOG	SOIL DESCRIPTION (NAME, GRADATION OR PLASTICITY, PARTICLE SIZE DISTRIBUTION, COLOR, MOISTURE CONTENT, RELATIVE DENSITY OR CONSISTENCY, SOIL STRUCTURE, MINERALOGY, USCS GROUP SYMBOL)
	0												12" Asphalt Brown and red sandy grit - no sub-base rock
		1'-2.5'											
	2												
	4	3.5'-5'	SP1	15/18	5-2-4 (6)	soft	0.5 0						8" Brown Silty Clay 7" Tan Sand (outer edge of utilty trench backfill?)
	6	6'-7.5'	SP2	11/18	4-4-11 (15)	soft	0 0						4" Sandy Clay 3" Sand 4" Limey Sand and Limestone Fragments
	8	8.5'-10'	SP3	14/18	3-28-3 (31)	soft	0.5 0.5					▼	6" Tan Sandy and Gravelly Clay 8" Grey Clay - Limestone Fragment in shoe
	10	10.3'-14.9'	Run1	97%	RQD = 64%								10.3' - Auger Refusal TOP OF BEDROCK @ 10.3' 10.3' to 13' - Limestone - slightly weathered, slightly vuggy
	12												13' to 14.9' - Limestone -medium bedded, fine grained, hard 14.1' - Possible Shale stringer
	14												14.9' - End of Core Run 1 - End of Hole BOTTOM OF HOLE @ 14.9'
	16												
	18	18.5'-20'											Core visual
	20												
	22												
	24	23.5'-25'											
	26												
	28	28.5'-30'											
	30												

REMARKS: Offset 10' South from BH-01 because auger could not pass a Limestone boulder or cobble at 3.2' depth
Completion: CUTTINGS and 1 1/2 bags of bentonite to 1.5' of surface, 2 spider plugs, dry cuttings (6"), Asphalt patch (12")

The stratification lines represent approximate strata boundaries . Unless specified, the transitions may be gradual.

DAILY FIELD REPORT BOREHOLE LOG

SHEET: 1 of 1
PROJECT NUMBER: 19-6043
HOLE NUMBER: BH-02

PROJECT: Jefferson County MOU 19-2
LOCATION: Hillsboro-House Springs Rd @ Belew Creek
COORDINATES: Center of surveyed mark
DRILLING CONTRACTOR: Bulldog
DRILL MAKE & MODEL: CME 55LC
DEPTH TOP OF ROCK: 11.9'
DEPTH CASING & SIZE:
HOLE SIZE: 3.75"
ELEVATION: 593'
DEPTH BOTTOM OF HOLE: 17.25'
ANGLE FROM VERT. AND BEARING:
WATER LEVEL:
FLUIDS AND ADDITIVES:
DATE START: 8/7/2019
DATE FINISH: 8/7/2019
LOGGER: mdw

ELEVATION	DEPTH BELOW SURFACE (Feet)	SAMPLE INTERVAL	SAMPLE TYPE & NO.	SAMPLE RECOVERY	STANDARD PENETRATION TEST RESULT 6"-6"-6" (N)	STIFFNESS	Pocket Pen - tons/ft²	MOISTURE %	LIQUID LIMIT	PLASTIC LIMIT	PLASTICITY INDEX	SYMBOLIC LOG	SOIL DESCRIPTION (NAME, GRADATION OR PLASTICITY, PARTICLE SIZE DISTRIBUTION, COLOR, MOISTURE CONTENT, RELATIVE DENSITY OR CONSISTENCY, SOIL STRUCTURE, MINERALOGY, USCS GROUP SYMBOL)
	0												12" Asphalt 4" Old chip and seal, but very hard - tough to drill
		1'-2.5'											
	2												
	4	3.5'-5'	SP1	14/18	3-6-10 (16)	stiff	2.25						Brown Sandy Clay - few gravel bits
	6	6'-7.5'	SP2	0.5/18	4-3-4 (7)	n/a	n/a						Gravel fragment bridged the split spoon. No sample.
	8	8.5'-10'	SP3	16/18	3-7-7 (14)	m.stiff	n/a						Brown sandy gravelly clay - chert at bottom
	10				7-50 [5"]								10.95' - First Auger Refusal Split spoon dropped 6" between 4" and 10", but then refused on mudstone @11'. Augered to 11.9' for final refusal. TOP OF BEDROCK @ 11.9'
	12	11.95'-17.25'	Run1	100%	RQD = 87.5%								11.95' to 12.75' - Limestone - slightly weathered, slightly vuggy
	14												12.75' to 15.1' - Limestone -medium vuggy, fine grained, hard
	16												15.1' to 17.25' - Limestone - medium bedded, cherty, hard 17.25' - End of Core Run 1 - End of Hole BOTTOM OF HOLE @ 17.25'
	18	18.5'-20'											Core visual
	20												
	22												
	24	23.5'-25'											
	26												
	28	28.5'-30'											
	30												

REMARKS:
Completion: CUTTINGS and 1/2 bag of bentonite to 1.5' of surface, 1 spider plugs, dry cuttings (6"), Asphalt patch (12")

The stratification lines represent approximate strata boundaries . Unless specified, the transitions may be gradual.

STATE OF MISSOURI
STEPHEN ALSBURY
NUMBER E-24698
REGISTERED PROFESSIONAL ENGINEER

DATE PREPARED: 12/12/2019
STATE: MO
SHEET NO.: 31
ROUTE: H-HOUSE SPRINGS
COUNTY: JEFFERSON
JOB NO.: 19-6043
PROJECT NO.: .
BRIDGE NO.: .

DATE	DESCRIPTION
.	.
.	.
.	.
.	.
.	.
.	.
.	.

IF A SEAL IS PRESENT ON THIS SHEET IT HAS BEEN ELECTRONICALLY SEALED AND DATED.

JEFFERSON COUNTY PUBLIC WORKS DEPARTMENT
P.O. BOX 100
HILLSBORO, MO 63050
(636-797-5340) PHONE
(636-797-5565) FAX

ABNA
4140 LINDELL BOULEVARD
ST. LOUIS, MO 63108
PH. 314-454-0222
CERTIFICATE/LICENSE NO. 001501

Detailed Oct 2019
Checked Oct 2019

Note: This drawing is not to scale. Follow dimensions.

J:\2019\6043\Cadd\Design\Bridge\19-6043_022_Boring Log.dgn 7:52:51 AM 12/12/2019

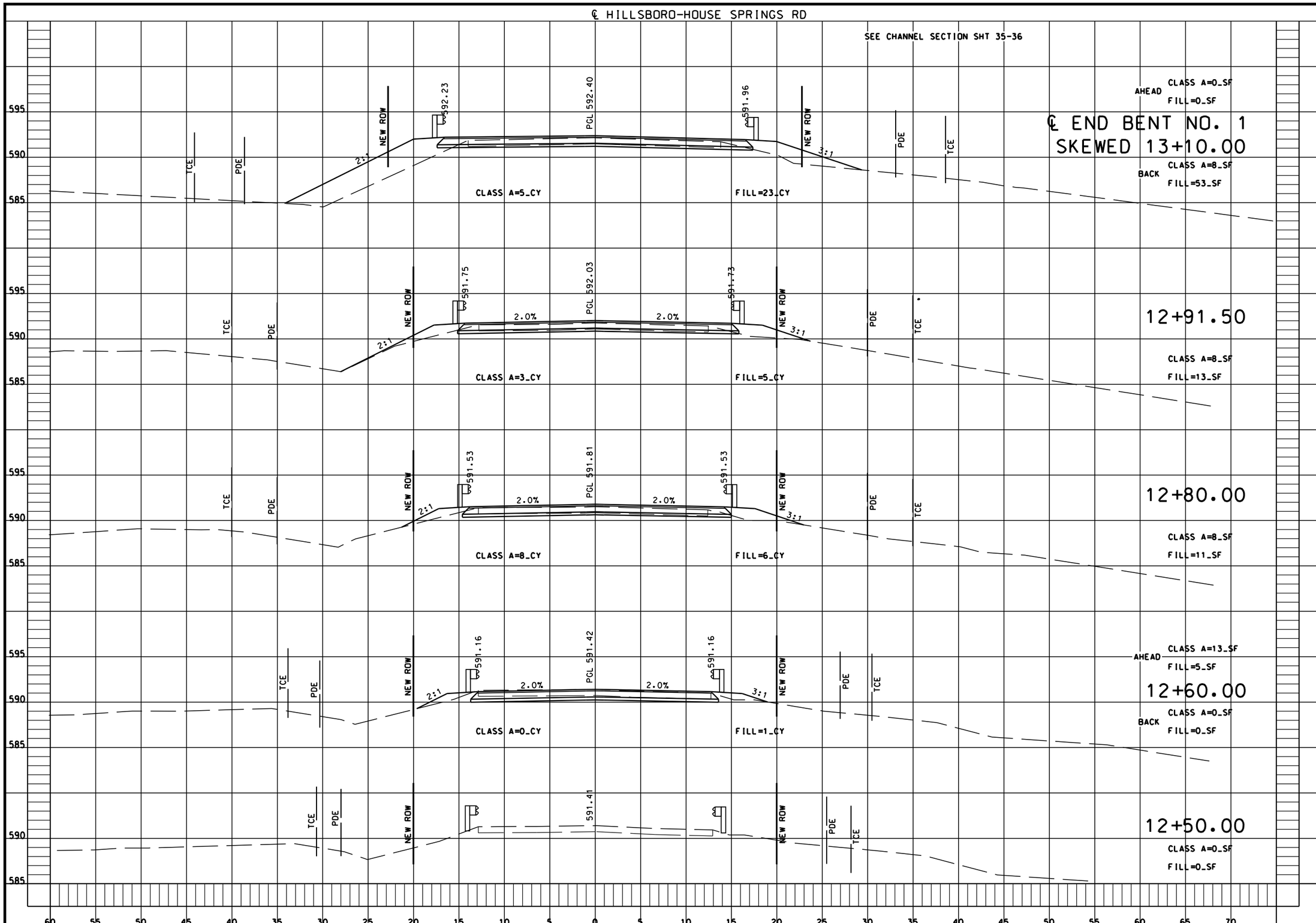

STATE OF MISSOURI
STEPHEN ALSBURY
NUMBER E-24698
REGISTERED PROFESSIONAL ENGINEER

DATE PREPARED	12/12/2019
STATE	MO
SHEET NO.	32
ROUTE	H-HOUSESPRINGS
COUNTY	JEFFERSON
JOB NO.	19-6043
PROJECT NO.	.
BRIDGE NO.	.

DATE	DESCRIPTION
.	.

IF A SEAL IS PRESENT ON THIS SHEET IT HAS BEEN ELECTRONICALLY SEALED AND DATED.

JEFFERSON COUNTY PUBLIC WORKS
DEPARTMENT

P.O. BOX 100
HILLSBORO, MO 63050
(636-797-5340) PHONE
(636-797-5565) FAX

ABNA
4140 LINDELL BOULEVARD
ST. LOUIS, MO 63108
PH. 314-454-0222
CERTIFICATE/LICENSE NO. 001501

REV.

Detailed OCT 2019
Checked OCT 2019

Note: This drawing is not to scale. Follow dimensions.

J:\2019\6043\Cadd\Design\010_19-6043_SHT-SECTIONS.DGN 8:14:54 AM 12/12/2019

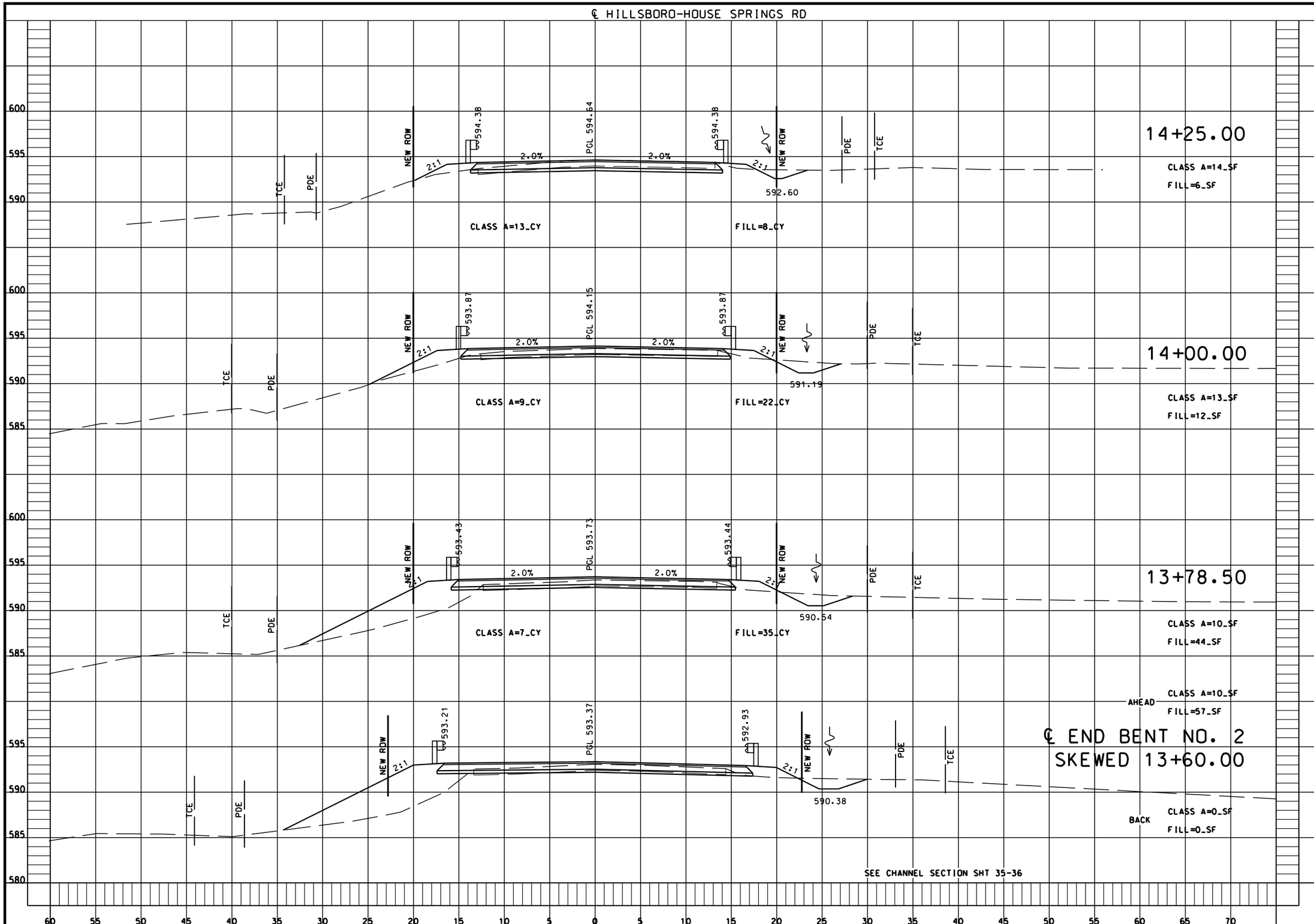

STATE OF MISSOURI
STEPHEN ALSBURY
NUMBER E-24688
REGISTERED PROFESSIONAL ENGINEER

DATE PREPARED	12/12/2019
STATE	MO
SHEET NO.	33
ROUTE	H-HOUSESPRINGS
COUNTY	JEFFERSON
JOB NO.	19-6043
PROJECT NO.	.
BRIDGE NO.	.

DATE	DESCRIPTION
.	.
.	.
.	.
.	.
.	.
.	.
.	.

IF A SEAL IS PRESENT ON THIS SHEET IT HAS BEEN ELECTRONICALLY SEALED AND DATED.

JEFFERSON COUNTY PUBLIC WORKS
DEPARTMENT
P.O. BOX 100
HILLSBORO, MO 63050
(636-797-5340) PHONE
(636-797-5565) FAX

ABNA
4140 LINDELL BOULEVARD
ST. LOUIS, MO 63108
PH. 314-454-0222
CERTIFICATE/LICENSE NO. 001501

REV.

Detailed OCT 2019
Checked OCT 2019

Note: This drawing is not to scale. Follow dimensions.

J:\2019\6043\Cadd\Design\010_19-6043_SHT-SECTIONS.DGN 8:16:02 AM 12/12/2019

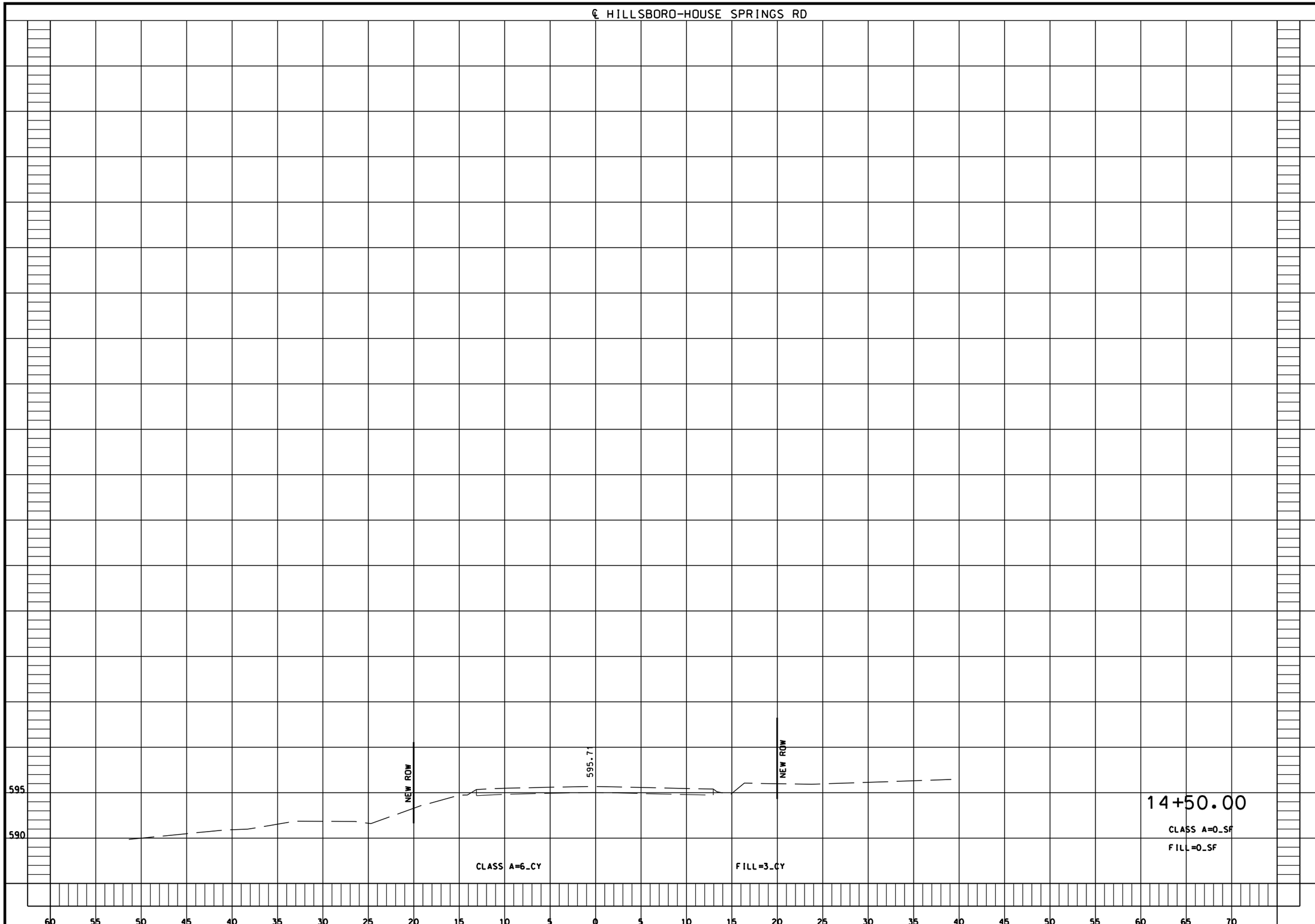

STATE OF MISSOURI
STEPHEN ALSBURY
NUMBER E-24698
REGISTERED PROFESSIONAL ENGINEER

DATE PREPARED	12/12/2019
STATE	MO
SHEET NO.	3-4
ROUTE	H-HOUSESPRINGS
COUNTY	JEFFERSON
JOB NO.	19-6043
PROJECT NO.	.
BRIDGE NO.	.

DATE	DESCRIPTION
.	.
.	.
.	.
.	.
.	.
.	.
.	.

IF A SEAL IS PRESENT ON THIS SHEET IT HAS BEEN ELECTRONICALLY SEALED AND DATED.

JEFFERSON COUNTY PUBLIC WORKS
DEPARTMENT

P.O. BOX 100
HILLSBORO, MO 63050
(636-797-5340) PHONE
(636-797-5565) FAX

ABNA
4140 LINDELL BOULEVARD
ST. LOUIS, MO 63108
PH. 314-454-0222
CERTIFICATE/LICENSE NO. 001501

REV.

Detailed OCT 2019
Checked OCT 2019

Note: This drawing is not to scale. Follow dimensions.

J:\2019\6043\Cadd\Design\010_19-6043_SHT-SECTIONS.DGN 8:16:37 AM 12/12/2019

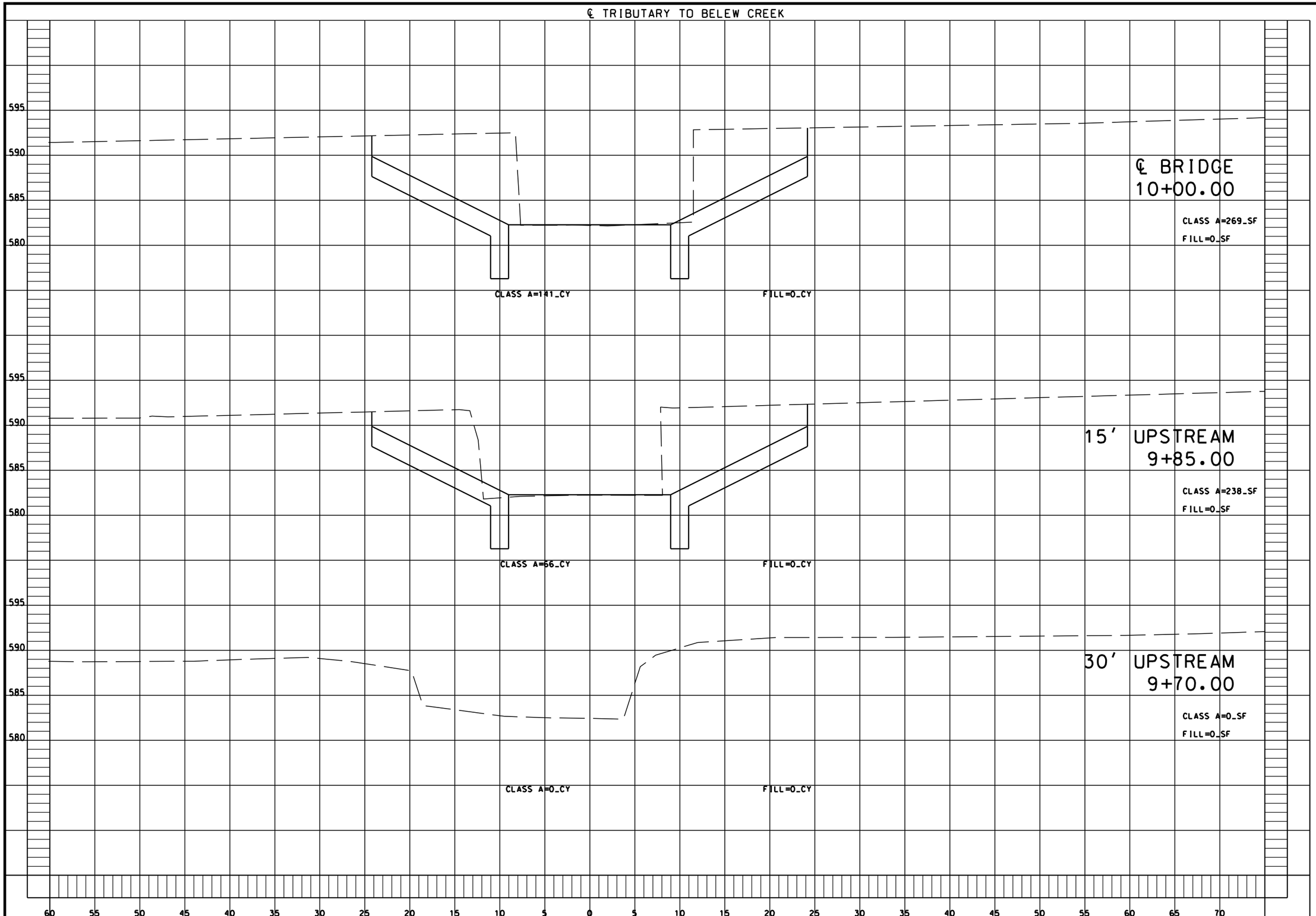

STATE OF MISSOURI
STEPHEN ALSBURY
NUMBER E-24698
REGISTERED PROFESSIONAL ENGINEER

DATE PREPARED	12/12/2019
STATE	MO
SHEET NO.	3-5
ROUTE	H-HOUSESPRINGS
COUNTY	JEFFERSON
JOB NO.	19-6043
PROJECT NO.	.
BRIDGE NO.	.

DATE	DESCRIPTION
.	.
.	.
.	.
.	.
.	.
.	.

IF A SEAL IS PRESENT ON THIS SHEET IT HAS BEEN ELECTRONICALLY SEALED AND DATED.

JEFFERSON COUNTY PUBLIC WORKS
DEPARTMENT
P.O. BOX 100
HILLSBORO, MO 63050
(636-797-5340) PHONE
(636-797-5565) FAX

ABNA
4140 LINDELL BOULEVARD
ST. LOUIS, MO 63108
PH. 314-454-0222
CERTIFICATE/LICENSE NO. 001501

REV.

Detailed OCT 2019
Checked OCT 2019

Note: This drawing is not to scale. Follow dimensions.

J:\2019\6043\Cadd\Design\010_19-6043_SHT-SECTIONS_CREEK.DGN 8:18:02 AM 12/12/2019

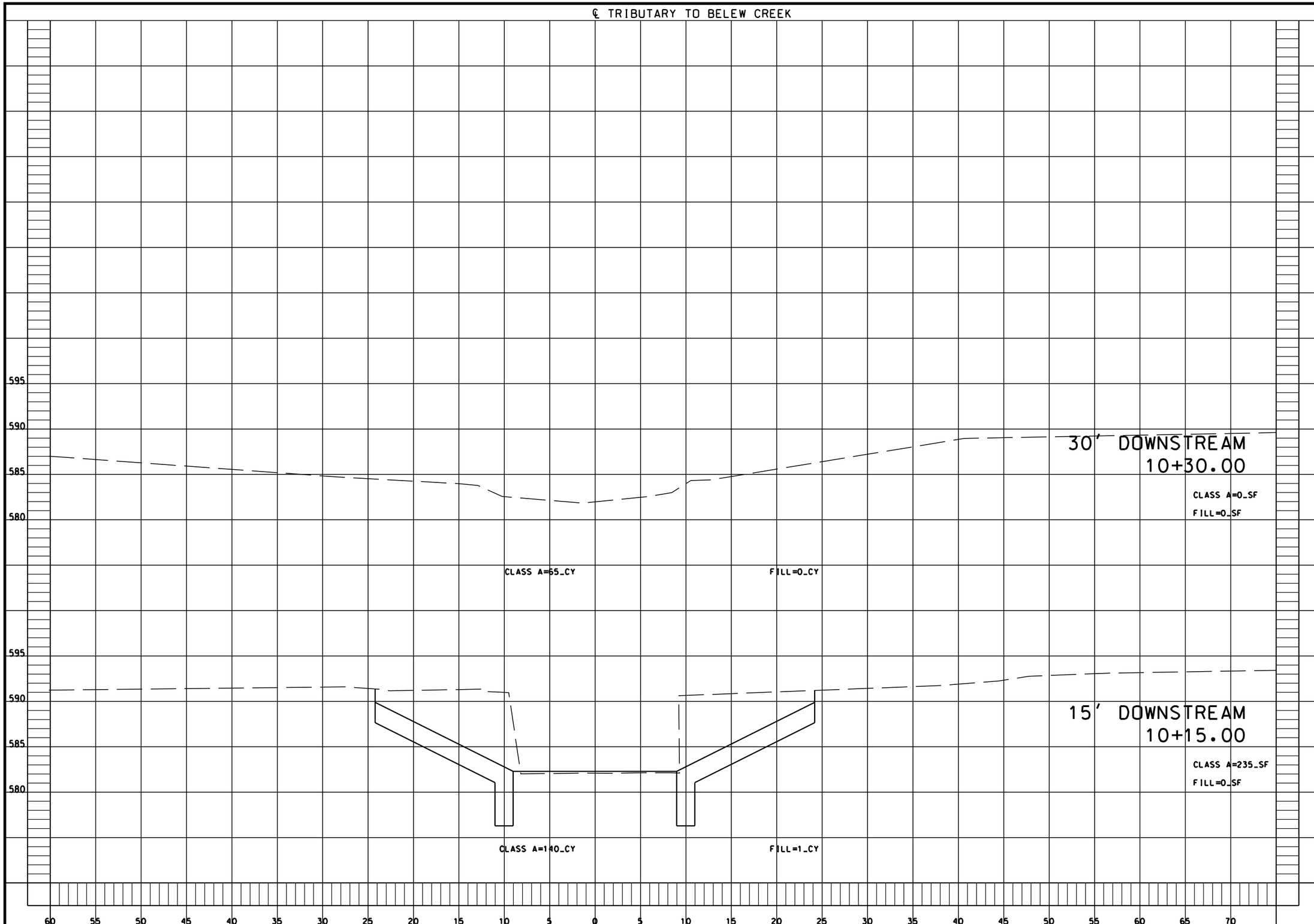

STATE OF MISSOURI
STEPHEN ALSBURY
NUMBER E-24698
REGISTERED PROFESSIONAL ENGINEER

DATE PREPARED	12/12/2019
STATE	MO
SHEET NO.	36
ROUTE	H-HOUSESPRINGS
COUNTY	JEFFERSON
JOB NO.	19-6043
PROJECT NO.	.
BRIDGE NO.	.

DATE	DESCRIPTION
.	.
.	.
.	.
.	.
.	.
.	.

IF A SEAL IS PRESENT ON THIS SHEET IT HAS BEEN ELECTRONICALLY SEALED AND DATED.

JEFFERSON COUNTY PUBLIC WORKS
DEPARTMENT
P.O. BOX 100
HILLSBORO, MO 63050
(636-797-5340) PHONE
(636-797-5565) FAX

ABNA
4140 LINDELL BOULEVARD
ST. LOUIS, MO 63108
PH. 314-454-0222
CERTIFICATE/LICENSE NO. 001501

REV.

Detailed OCT 2019
Checked OCT 2019

Note: This drawing is not to scale. Follow dimensions.

J:\2019\6043\Cadd\Design\010_19-6043_SHT-SECTIONS_CREEK.DGN 8:19:30 AM 12/12/2019