STATE OF MISSOURI
JEFFERSON COUNTY PUBLIC WORKS DEPARTMENT
PLANS FOR THE PROPOSED STRUCTURE REPLACEMENT
OF
BIG HOLLOW ROAD
OVER
SALINE CREEK
STP-9900 (646)
BRIDGE NO. 36900031

FINAL PLANS
February 3, 2017

JEFFERSON COUNTY
SEC 6 T39N, R7E

DESIGN DESIGNATION

LOCAL / RURAL MINOR COLLECTOR
ADT 2012 / 400 — CURRENT SPEED 30 MPH
DESIGN ADT 2032 /932 — DESIGN SPEED 30 MPH
TRUCKS 10% — POSTING TO REMAIN @ 30 MPH

SYMBOL LEGEND

A/C UNIT	GRATED MANHOLE	STORM MANHOLE
BOLLARD	GUY WIRE ANCHOR	STUMP
BUSH	LANDSCAPE LIGHT	TELEPHONE PEDESTAL
CLEANOUT	LAWN SPRINKLER	TELEPHONE PULLBOX
COMBINED MANHOLE	LIGHT STANDARD	TEMPORARY CONSTRUCTION EASEMENT
CURB/AREA INLET	MONITORING WELL	TREE, DECIDUOUS
ELECTRIC MANHOLE	PARKING METER	TREE, CONIFEROUS
ELECTRIC METER	POWER POLE	TRAFFIC SIGNAL MAST ARM
ELECTRIC PEDESTAL	PROPOSED ROW	TRAFFIC SIGNAL PEDESTAL
ELECTRIC PULLBOX	ROW MARKER	UTILITY MARKER
FIRE HYDRANT	RR FLASHERS	WATER MANHOLE
GAS DRIP	SAMPLING TEE	WATER METER
GAS METER	SANITARY MANHOLE	WATER VALVE
GAS VALVE	SIGN	
GRATED INLET	SOIL BORING	

INDEX

SHEET NO.	DESCRIPTION OF SHEET
1	TITLE SHEET
2	TYPICAL SECTIONS
2A	SUMMARY OF QUANTITIES
2B	SCHEDULE OF QUANTITIES
2BS	SCHEDULE OF QUANTITIES
3-5	PLAN & PROFILE SHEETS
6-7	RIGHT OF WAY SURVEY (SHEETS NOT INCLUDED)
8	COORDINATE POINTS
9	SPECIAL SHEET (RIPRAP LAYOUT)
10	SPECIAL SHEET (RIPRAP DETAILS)
11	FIELD ENTRANCE AND CULVERT PROFILES
12-13	TRAFFIC CONTROL
14	EROSION CONTROL
15	FENCING LAYOUT
16-39	BRIDGE DRAWINGS (36900031)
40-47	ROADWAY SECTIONS

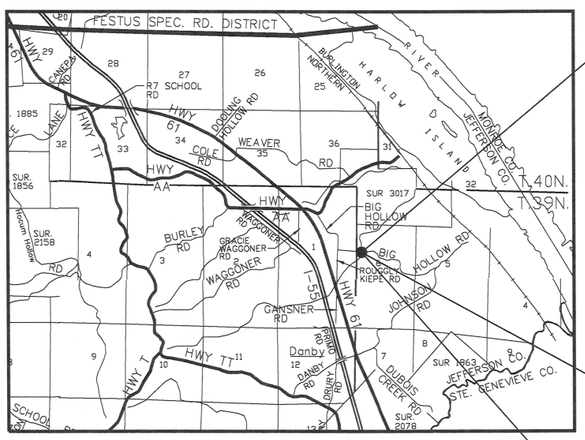

PROJECT BEGINS
STA. 0+00

RIGHT OF WAY, GRADING, DRAINAGE, BRIDGE, GUARDRAIL AND PAVEMENT

PROJECT ENDS
STA. 10+97.51

PROJECT LOCATION
N 38.13052°(DD)
W 90.30006°(DD)

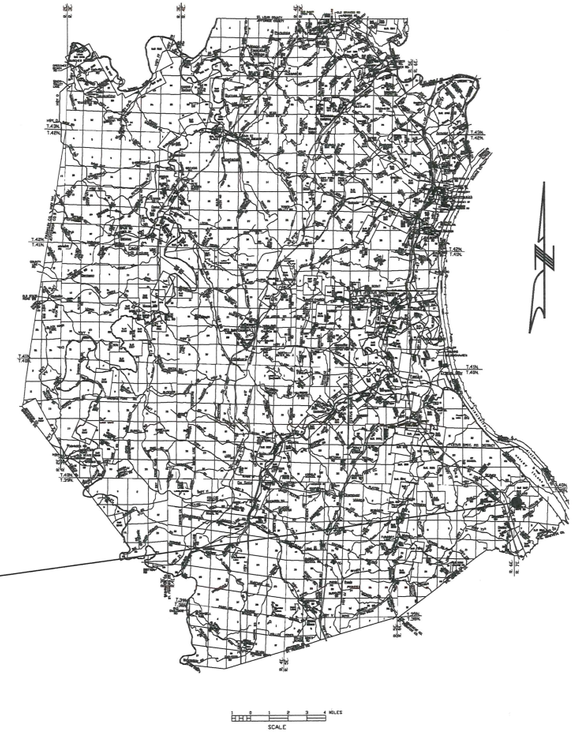

LOCATION MAP
NET PROJECT LENGTH 1097.51 FEET (0.2078 MILES)

Line Legend

Proposed Right of Way
Permanent Drainage Easement — PDE
Temporay Constructin Easement — TCE
Overhead Electric
Underground Telephone
Slope limit — SL
Proposed Ditch

Site Benchmarks:(NAVD 1988)

TBM#1 - 5/8" Iron Rod with ABNA Orange Trav. Pnt. Cap. (Traverse Point 400) (18.06' Rt. Sta. 1+14.36): Elevation 409.18

TBM#2 - 5/8" Iron Rod with ABNA Orange Trav. Pnt. Cap (Traverse Point 401) (Description): Elevation 424.73

TBM #3 - 5/8" Iron Rod with ABNA Orange Trav. Pnt. Cap (Traverse Point 402) (Description): Elevation 480.54

UTILITIES

TELEPHONE	ELECTRIC
AT&T GLENN HOGENMILLER 122 N. 2nd STREET FESTUS, MO 63028 (636) 931-7525	AMEREN U.E. MR. BILL ROSENER CONSULTING ENGINEER 6450 HIGHWAY MM HOUSE SPRINGS, MO 63051 (636) 671-6162

UTILITY LOCATION SERVICE
1-800-DIG-RITE

APPROVED FOR CONSTRUCTION

PUBLIC WORKS DIRECTOR — DATE 2/6/17

STATE OF MISSOURI — STEPHEN A. SCHUPP — NUMBER E-24698 — PROFESSIONAL ENGINEER

DATE PREPARED	
2/3/2017	
STATE: MO	SHEET NO.: 1
ROUTE: BIG HOLLOW	
COUNTY: JEFFERSON	
JOB NO.: 14-6048	
PROJECT NO.: STP-9900 (646)	
BRIDGE NO.: 36900031	

DATE	DESCRIPTION

IF A SEAL IS PRESENT ON THIS SHEET IT HAS BEEN ELECTRONICALLY SEALED AND DATED.

JEFFERSON COUNTY PUBLIC WORKS DEPARTMENT
P.O. BOX 100
HILLSBORO, MO 63050
(636-797-5340) PHONE
(636-797-5565) FAX

ABNA
4140 LINDELL BOULEVARD
ST. LOUIS, MO 63108
PH. 314-454-0222
CERTIFICATE/LICENSE NO. 001501

SUPERELEVATION (FEET) RELATIVE TO PROFILE GRADE		
	LOCATION	LOCATION
	15' Left	15' Right
Station	ELEV (FEET)	ELEV (FEET)
0+00	Match Existing	Match Existing
0+50	-0.30	-0.30
1+00	-0.30	-0.30
1+50	-0.30	-0.30
2+00	-0.30	-0.30
2+50	-0.30	-0.30
3+00	-0.30	-0.30
3+50	-0.30	-0.30
4+00	-0.30	-0.30
4+25	-0.30	-0.30
4+50	-0.30	-0.06
4+75	-0.36	+0.36
5+00	-0.42	+0.42
5+12.03	-0.42	+0.42
Bridge	-0.42	+0.42
5+94.47	-0.42	+0.42
6+00	-0.42	+0.42
6+50	-0.42	+0.42
7+00	-0.42	+0.42
7+25	-0.30	+0.12
7+50	-0.30	-0.18
7+75	-0.30	-0.30
8+00	-0.30	-0.30
8+25	-0.05	-0.30
8+50	+0.20	-0.30
8+75	+0.45	-0.45
9+00	+0.70	-0.70
9+25	+0.95	-0.95
9+50	+1.20	-1.20
10+00	+0.86	-1.00
10+50	+0.53	-0.80
10+97.51	Match Existing	Match Existing

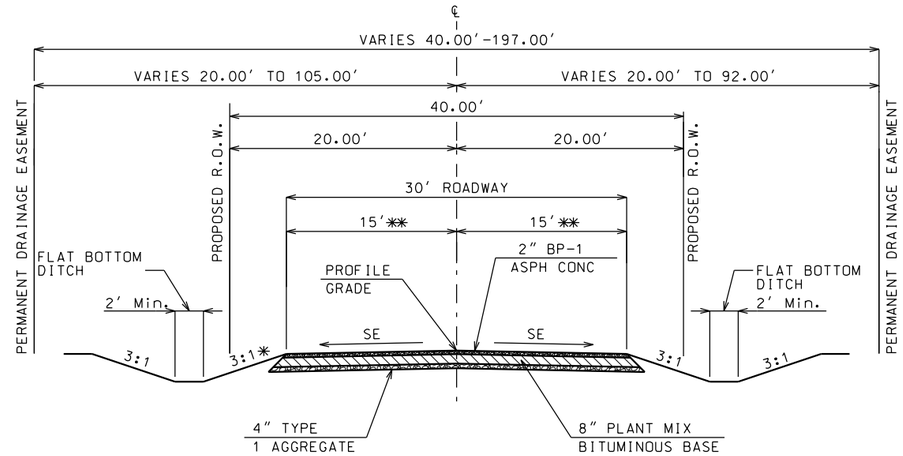

CROSS SLOPE VARIES SEE SUPERELEVATION TABLE

PROPOSED TYPICAL CROSS SECTION BIG HOLLOW ROAD

STA 0+50.00 TO STA 4+92.62
STA 6+14.88 TO STA 10+47.51

✱ 2:1 SLOPE LEFT STA 6+00.00 TO STA 7+75.00
✱✱ TRANSITION FROM 15' TO EXISTING 0+00.00 TO 0+50.00
10+47.51 TO 10+97.51

BRIDGE APPROACH SLAB (MINOR ROAD)

STA 4+92.62 TO STA 5+12.62
STA 5+94.88 TO STA 6+14.88

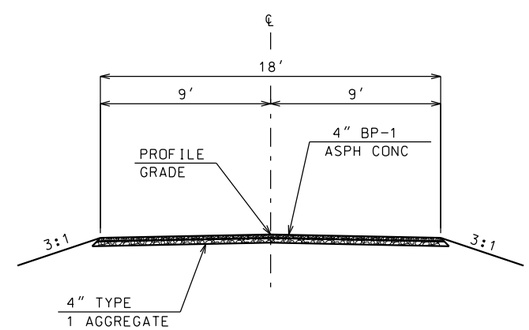

PROPOSED TYPICAL CROSS SECTION DRIVEWAY/FIELD ENTRANCE

FE#1 STA 2+29.00 RT
FE#2 STA 2+29.00 LT
FE#3 STA 10+19.00 RT
FE#4 STA 10+19.00 LT

Detailed Sept. 2016
Checked Sept. 2016

Note: This drawing is not to scale. Follow dimensions.

TYPICAL SECTIONS

STATE OF MISSOURI
STEPHEN M. SEELY
NUMBER E-24698
REGISTERED PROFESSIONAL ENGINEER

DATE PREPARED	
2/3/2017	
STATE	SHEET NO.
MO	2
ROUTE	
BIG HOLLOW	
COUNTY	
JEFFERSON	
JOB NO.	
14-6048	
PROJECT NO.	
STP-9900 (646)	
BRIDGE NO.	
36900031	

DATE	DESCRIPTION

IF A SEAL IS PRESENT ON THIS SHEET IT HAS BEEN ELECTRONICALLY SEALED AND DATED.

JEFFERSON COUNTY PUBLIC WORKS DEPARTMENT
P.O. BOX 100
HILLSBORO, MO 63050
(636-797-5340) PHONE
(636-797-5565) FAX

ABNA
4140 LINDELL BOULEVARD
ST. LOUIS, MO 63108
PH. 314-454-0222
CERTIFICATE/LICENSE NO. 001501

ESTIMATED QUANTITIES

ITEM NO.	DESCRIPTION	UNIT	QUANTITY
Roadway			
2013000	Clearing & Grubbing	ACRE	2.2
2022010	Removal of Improvements	LS	1.0
2031000	Class A Excavation	CUYD	3008.0
2036000	Compacting Embankment	CUYD	3008.0
2059999	Subgrade Repair	SQYD	500.0
2063000	Class 3 Excavation	CUYD	62.0
2072000	Linear Grading, Class 2	STA	1.9
2142000	Furnishing Rock Fill	CUYD	2185.0
2143000	Placing Rock Fill	CUYD	2185.0
3040143	Type 1 Aggregate for Base (4" Thick)	SQYD	3775.0
4011209	Bituminous Pavement Mixture PG64-22 Surface (BP-1)	TON	471.2
4013000	Bituminous Pavement Mixture PG64-22 (Base)	TON	1526.0
4071005	Tack Coat	GAL	120.0
6061010	Guardrail Type A	LF	125.0
6062204A	Bridge Anchor Section, 6.5 FT Post	EA	4.0
6062303	Asymetrical Transition Section, 6.5 FT Post	EA	4.0
6063015	Type A Crashworthy End Terminal	EA	4.0
6079902	Drive Gates	EA	4.0
6079903	5-Strand 48" Barbed Wire Fence	LF	1528.0
6119905	Riprap Bedding	SQYD	2143.0
6119907	Riprap	CUYD	2359.0
6161005	Construction Signs	SQFT	195.0
6161030	Type III Moveable Barricade	EA	6.0
6161052	Warning Light Type B	EA	8.0
6161198	Changeable Message Sign, Contractor Furnished & Retained	EA	2.0
6181000	Mobilization	LS	1.0
6274000	Contractor Furnished Surveying and Staking	LS	1.0
7250318A	18" Pipe Group B	LF	140.0
.			
7261036	36" Pipe Group A	LF	78.0
7320018A	18" or Allowed Substitute Group B Flared End Section	EA	8.0
.			
7320636A	36" or Allowed Substitute Group A Flared End Section	EA	2.0
8061005	Rock Ditch Check	LF	72.0
8061019	Silt Fence	LF	2865.0

ESTIMATED QUANTITIES

ITEM NO.	DESCRIPTION	UNIT	QUANTITY
Bridge			
2061000	Class 1 Excavation	CUYD	202.0
2160500	Removal of Bridges	LS	1.0
5031011	Bridge Approach Slab (Minor Road)	SQYD	134.0
7021010	Structural Steel Piles (10 in)	LF	335.0
7032003	Class B Concrete (Substructure)	CUYD	60.2
7034213	Slab on Concrete I-Girder	SQYD	298.6
7034215	Safety Barrier Curb	LF	230.0
7056002	Type 4 (45") Prestressed Concrete I-Girder	LF	483.0
7123301	Steel Intermediate Diaphragm for P/S Concrete Girders	EA	5.0
7123610	Slab Drains	EA	6.0
7151001	Vertical Drain at End Bents	EA	2.0
7161000	Plain Neoprene Bearing Pad	EA	12.0
Striping			
6206000C	4" White Acrylic Waterborne Pavement Marking Paint, Type P Beads	LF	2200.0
6206001C	4" Yellow Acrylic Waterborne Pavement Marking Paint, Type P Beads	LF	2200.0
6208065	Temporary Raised Pavement Marker, Type 2	EA	30.0
Landscaping			
8051000	Seeding	ACRE	1.6

Detailed Sept. 2016
Checked Sept. 2016

Note: This drawing is not to scale. Follow dimensions.

SUMMARY OF QUANTITIES

STATE OF MISSOURI
STEPHEN M. SEELE
NUMBER E-24698
REGISTERED PROFESSIONAL ENGINEER

DATE PREPARED
2/3/2017

STATE MO | SHEET NO. 2A

ROUTE
BIG HOLLOW

COUNTY
JEFFERSON

JOB NO.
14-6048

PROJECT NO.
STP-9900 (646)

BRIDGE NO.
36900031

DATE	DESCRIPTION

IF A SEAL IS PRESENT ON THIS SHEET IT HAS BEEN ELECTRONICALLY SEALED AND DATED.

JEFFERSON COUNTY PUBLIC WORKS
DEPARTMENT
P.O. BOX 100
HILLSBORO, MO 63050
(636-797-5340) PHONE
(636-797-5565) FAX

ABNA
4140 LINDELL BOULEVARD
ST. LOUIS, MO 63108
PH. 314-454-0222
CERTIFICATE/LICENSE NO. 001501

CLEARING & GRUBBING = 2.2 ACRES

REMOVAL OF IMPROVEMENTS = 1 LUMP SUM

-Asphalt Pavement Sta. 0+00 to Ex. Bridge = 1342 Sq Yd
-Asphalt Pavement Sta. Ex. Bridge to Sta. 10+97.51 = 1374 Sq Yd
-Fence Rt. Sta. 0+00 to Rt. Sta. 5+00 = 500 Lin Ft.
-Fence Lt. Sta. 0+00 to Lt. Sta. 5+00 = 500 Lin Ft.
-Fence Lt. Sta. 5+60 to Lt. Sta. 8+75 = 315 Lin Ft.
-Fence Rt. Sta. 6+00 to Rt. Sta. 11+00 = 500 Lin Ft.
-Gate Rt. Sta. 2+29 = 1 Each
-Gate Lt. Sta. 2+29 = 1 Each
-2 Each - Load Limit Signs at Ex. Bridge
-4 Each - Panel Markers at Ex. Bridge
-4 Each - Chevron Markers
-2 Each - Yield to On Coming Traffic at Ex. Bridge

EARTH WORK SUMMARY	CUT	FILL
	CU YD	CU YD
CLASS A EXCAVATION (MAIN LINE)	2215	-
CLASS A EXCAVATION (CHANNEL)	883	
COMPACTING EMBANKMENT (MAINLINE)		3008
TOTALS	3008	3008

ADDITIONAL FILL IS REQUIRED.
IT SHALL BE PROVIDED UNDER
FURNISHING AND PLACING ROCK FILL

FURNISHING & PLACING ROCK FILL	FILL
	CU YD
MAIN LINE	2185
TOTALS	2185

LINEAR GRADING, CLASS 2	STA.
FIELD ENTRANCE #1	0.5
FIELD ENTRANCE #2	0.5
FIELD ENTRANCE #3	0.4
FIELD ENTRANCE #4	0.5
TOTALS	1.9

SUBGRADE REPAIR = 500 SQ YD.

LOCATIONS AS DIRECTED BY THE ENGINEER.
(SEE SPECIAL PROVISIONS)

ASPHALTIC PAVEMENT & BASE				2"/4" ENTRANCES	8"	0.035 G/SY	TYPE 4 AGGREGATE WIDTH	TYPE 4 AGGREGATE 4" SQ YD
LOCATION	LENGTH FEET	WIDTH FEET	AREA (1) SQ YD	BP-1 TON	BIT. BASE TON	TACK GAL (2)		
0+00 TO 0+50	50.0	26.0 AVG	145	17.2	68.8	5	27.67	154
0+50 TO 4+92.62	442.62	30.0	1476	176.0	702.2	55	31.67	1558
6+14.88 TO 10+47.51	432.63	30.0	1442	172.0	686.2	55	31.67	1523
10+47.51 TO 10+97.51	50.0	26.0 AVG	145	17.2	68.8	5	27.67	154
FIELD ENTRANCE #1	47.5	18.0	101	24.5	-	-	18.67	106
FIELD ENTRANCE #2	47.5	18.0	101	24.5	-	-	18.67	106
FIELD ENTRANCE #3	30.0	18.0	71	16.4	-	-	18.67	73
FIELD ENTRANCE #4	45.0	18.0	90	23.4	-	-	18.67	101
TOTALS			3571	471.2	1526.0	120		3775

(1) INCLUDES TAPERS
(2) INCLUDES TACK FOR ONE LIFT

BRIDGE APPROACH SLAB (MINOR ROAD)			
LOCATION	LENGTH FEET	WIDTH FEET	BRIDGE APPROACH SLAB (SQ YD)
4+92.62 TO 5+12.62	20.0	30	67.0
5+94.88 TO 6+14.88	20.0	30	67.0
TOTALS			134.0

GUARDRAIL						
LOCATION	BRIDGE ANCHOR EACH	TRANS SECTION EACH	TYPE A TERMINAL EACH	TYPE A GUARDRAIL LIN FT	TYPE E GUARDRAIL LIN FT	REMARKS
EAST APPROACH	1	1	1	125	-	
EAST DEPARTING	1	1	1	-	-	.
WEST APPROACH	1	1	1	-	-	.
WEST DEPARTING	1	1	1	-	-	
TOTALS	4	4	4	125	-	.

EROSION/BANK PROTECTION	RIPRAP BEDDING (12 INCHES)	RIPRAP (30 INCHES)	
LOCATION	SQ YD	CU YD	
END BENT NO. 1 (WEST SIDE)	1013	1114	
END BENT NO. 2 (EAST SIDE)	1130	1245	
TOTALS	2143	2359	

MOBILIZATION = 1 LUMP SUM

CONTRACTOR FURNISHED SURVEYING AND STAKING = 1 LUMP SUM

PIPE CULVERTS							
PIPE GROUP	A	B		FLARED END SECTION			
	36" LIN FT	18" LIN FT	42" LIN FT	18" EACH	36" EACH	42" EACH	CLASS 3 EXCAVATION CU YD
FE1 TO FE2	.	24	.	2	.	.	2
FE3 TO FE4	.	32	.	2	.	.	.
FE5 TO FE6	.	51	.	2	.	.	17
FE7 TO FE8	78	.	.	.	2	.	37
FE9 TO FE10	.	33	.	2	.	.	6
TOTALS	78	140	.	8	2	.	62

4" WHITE PAVEMENT MARKING

EDGE LINES 12' LT & RT
STA 0+00 TO STA 11+00 = 2200 LIN FT

4" YELLOW PAVEMENT MARKING

DOUBLE SOLID CENTERLINE
STA 0+00 TO STA 1100 = 2200 LIN FT

TEMPORARY RAISED PAVEMENT MARKER, TYPE 2 = 30 EACH

TO BE USED IF ROAD IS OPENED PRIOR TO FINAL STRIPING AT 40' SPACING

SEEDING = 1.6 ACRE

Detailed Sept. 2016
Checked Sept. 2016

Note: This drawing is not to scale. Follow dimensions.

SUMMARY OF QUANTITIES
1 OF 2

STATE OF MISSOURI
STEPHEN M. SEELY
NUMBER E-24698
REGISTERED PROFESSIONAL ENGINEER

DATE PREPARED	
2/3/2017	
STATE	SHEET NO.
MO	2B
ROUTE	
BIG HOLLOW	
COUNTY	
JEFFERSON	
JOB NO.	
14-6048	
PROJECT NO.	
STP-9900 (646)	
BRIDGE NO.	
36900031	

DATE	DESCRIPTION

IF A SEAL IS PRESENT ON THIS SHEET IT HAS BEEN ELECTRONICALLY SEALED AND DATED.

JEFFERSON COUNTY PUBLIC WORKS DEPARTMENT
P.O. BOX 100
HILLSBORO, MO 63050
(636-797-5340) PHONE
(636-797-5565) FAX

HABNA
4140 LINDELL BOULEVARD
ST. LOUIS, MO 63108
PH. 314-454-0222
CERTIFICATE/LICENSE NO. 001501

SIGN	SIZE (IN.)	AREA (SQ. FT.)	QTY	TOTAL AREA	QTY RELOC	TOTAL RELOC AREA	DESCRIPTION
WARNING SIGNS							
W01-1L	48X48	16.00					TURN (SYMBOL LEFT ARROW) WITH FLAGS
W01-1R	48X48	16.00					TURN (SYMBOL RIGHT ARROW) WITH FLAGS
W01-2L	48X48	16.00					CURVE (SYMBOL LEFT ARROW) WITH FLAGS
W01-2R	48X48	16.00					CURVE (SYMBOL RIGHT ARROW) WITH FLAGS
W01-3L	48X48	16.00					REVERSE TURN (SYMBOL LEFT ARROW) WITH FLAGS
W01-3R	48X48	16.00					REVERSE TURN (SYMBOL RIGHT ARROW) WITH FLAGS
W01-4L	48X48	16.00					REVERSE CURVE (SYMBOL LEFT ARROW) WITH FLAGS
W01-4R	48X48	16.00					REVERSE CURVE (SYMBOL RIGHT ARROW) WITH FLAGS
W01-4bL	48X48	16.00					DOUBLE ARROW REVERSE CURVE (SYMBOL LEFT ARROWS) WITH FLAGS
W01-4bR	48X48	16.00					DOUBLE ARROW REVERSE CURVE (SYMBOL RIGHT ARROWS) WITH FLAGS
W01-4cL	48X48	16.00					TRIPLE ARROW REVERSE CURVE (SYMBOL LEFT ARROWS) WITH FLAGS
W01-4cR	48X48	16.00					TRIPLE ARROW REVERSE CURVE (SYMBOL RIGHT ARROWS) WITH FLAGS
W01-6	48X24	8.00					HORIZONTAL ARROW (SYMBOL)
W01-6a	72X36	18.00					HORIZONTAL ARROW (SYMBOL ON PERMANENT BARRICADE)
W01-7	48X24	8.00					DOUBLE HEAD HORIZONTAL ARROW (SYMBOL)
W01-7a	72X36	18.00					DOUBLE HEAD HORIZONTAL ARROW (SYMBOL ON PERMANENT BARRICADE)
W01-8	18X24	3.00					CHEVRON (SYMBOL)
W01-8a	36X48	12.00					CHEVRON (SYMBOL FOR DIVIDED HIGHWAYS)
W03-1a	48X48	16.00					STOP AHEAD (SYMBOL) WITH FLAGS
W03-2a	48X48	16.00					YIELD AHEAD (SYMBOL) WITH FLAGS
W03-3	48X48	16.00					SIGNAL AHEAD (SYMBOL) WITH FLAGS
W03-4	48X48	16.00					BE PREPARED TO STOP WITH FLAGS
W03-5	48X48	16.00					SPEED LIMIT XX AHEAD (SYMBOL) WITH FLAGS
W04-1L	48X48	16.00					MERGE (SYMBOL FROM LEFT)
W04-1R	48X48	16.00					MERGE (SYMBOL FROM RIGHT)
W05-1	48X48	16.00					ROAD/BRIDGE/RAMP NARROWS WITH FLAGS
W05-3	48X48	16.00					ONE LANE BRIDGE
W05-5	48X48	16.00					NARROW LANES WITH FLAGS
W06-1	48X48	16.00					DIVIDED HIGHWAY (SYMBOL)
W06-2	48X48	16.00					DIVIDED HIGHWAY END (SYMBOL)
W06-3	48X48	16.00					TWO WAY TRAFFIC (SYMBOL) WITH FLAGS
W07-3a	30X24	5.00					NEXT XX MILES (PLAQUE)
W08-1	48X48	16.00					BUMP
W08-2	48X48	16.00					DIP
W08-3	48X48	16.00					PAVEMENT ENDS
W08-4	48X48	16.00					SOFT SHOULDER
W08-5	48X48	16.00					SLIPPERY WHEN WET (SYMBOL) WITH FLAGS
W08-6	48X48	16.00					TRUCK CROSSING WITH FLAGS
W08-6c	48X48	16.00					TRUCK ENTRANCE WITH FLAGS
W08-7	36X36	9.00					LOOSE GRAVEL
W08-9	48X48	16.00					LOW SHOULDER
W08-9a	48X48	16.00					SHOULDER DROP-OFF
W08-11	48X48	16.00					UNEVEN LANES WITH FLAGS
W08-12	36X36	9.00					NO CENTER STRIPE WITH FLAGS
W10-1	42 RND.	9.62					RAILROAD CROSSING
W012-1	24X24	4.00					DOUBLE DOWN ARROW (SYMBOL)
W012-2	48X48	16.00					LOW CLEARANCE (SYMBOL)
W012-2x	24X18	3.00					LOW CLEARANCE (PLAQUE)
W012-3a,b	144X24	24.00					OVERHEAD LOW CLEARANCE (FEET AND INCHES)
SPECIAL	120X60	50.00					LOW CLEARANCE XX FT XX IN XX MILES AHEAD
SPECIAL	120X60	50.00					WIDTH RESTRICTION XX FT XX IN XX MILES AHEAD
W013-1	30X30	6.25					ADVISORY SPEED (PLAQUE)
W016-2	30X24	5.00	2	10.0			XXX FEET (PLAQUE)
W016-3	30X24	5.00					X MILE (PLAQUE)
W020-1	48X48	16.00	3	48.0			ROAD/BRIDGE/RAMP WORK AHEAD WITH FLAGS
W020-2	48X48	16.00					DETOUR AHEAD
W020-3	48X48	16.00	3	48.0			ROAD CLOSED AHEAD WITH FLAGS
W020-4	48X48	16.00					ONE LANE ROAD AHEAD WITH FLAGS
W020-5	48X48	16.00					RIGHT/CENTER/LEFT LANE CLOSED AHEAD WITH FLAGS
W020-5a	48X48	16.00					RIGHT/CENTER/LEFT TWO LANES CLOSED AHEAD WITH FLAGS
W020-6a	48X48	16.00					RIGHT/CENTER/LEFT LANE CLOSED WITH FLAGS
W020-7a	48X48	16.00					FLAGGER (SYMBOL) WITH FLAGS
W021-2	36X36	9.00					FRESH OIL
W021-5b	48X48	16.00					SHOULDER WORK AHEAD
W022-1	48X48	16.00					BLASTING ZONE AHEAD
W022-2	42X36	10.50					TURN OFF 2-WAY RADIO AND PHONE
W022-3	42X36	10.50					END BLASTING ZONE
W022-6e	21X15	2.19					WET PAINT (ARROW PIVOTS)
GUIDE SIGNS							
SPECIAL	36X36	9.00					FRESH OIL/LOOSE GRAVEL
E05-1	36X48	12.00					GORE EXIT
E05-2	48X36	12.00					EXIT OPEN
E05-2a	48X36	12.00					EXIT CLOSED
G020-1	60X24	10.00					ROAD WORK NEXT XX MILES
G020-2	48X24	8.00	3	24.0			END ROAD WORK
G020-4	36X18	4.50					PILOT CAR FOLLOW ME
SPECIAL	42X30	8.75					PLEASE WAIT FOR PILOT CAR WITH FLAGS
G023-1	36X12	3.00					WORK ZONE (PLAQUE)
M04-8a	24X18	3.00					END DETOUR
M04-9L	48X36	12.00					DETOUR (LEFT ARROW)
M04-9R	48X36	12.00					DETOUR (RIGHT ARROW)
M04-10L	48X18	6.00					DETOUR (ARROW LEFT)
M04-10R	48X18	6.00					DETOUR (ARROW RIGHT)
REGULATORY SIGNS							
R1-1	30X30	6.25					STOP
R1-2	48 TRI.	6.93					YIELD
R1-2a	36X36	9.00					TO ONCOMING TRAFFIC (PLAQUE)
R1-3	20X9	1.25					4-WAY (PLAQUE)
R2-1	36X48	12.00					SPEED LIMIT XX WITH FLAGS
R3-1	48X48	16.00					NO RIGHT TURN (SYMBOL)
R3-2	48X48	16.00					NO LEFT TURN (SYMBOL)
R3-3	36X36	9.00					NO TURNS
R3-4	48X48	16.00					NO U-TURN (SYMBOL)
R3-7L	30X30	6.25					LEFT LANE MUST TURN LEFT
R3-7R	30X30	6.25					RIGHT LANE MUST TURN RIGHT
R4-1	36X48	12.00					DO NOT PASS
R4-2	36X48	12.00					PASS WITH CARE
R4-7aL	36X48	12.00					KEEP LEFT (HORIZONTAL ARROW)
R4-7a	36X48	12.00					KEEP RIGHT (HORIZONTAL ARROW)
R5-1	30X30	6.25					DO NOT ENTER
R5-1a	36X24	6.00					WRONG WAY
R6-1L	48X18	6.00					ONE WAY ARROW (LEFT)
R6-1R	48X18	6.00					ONE WAY ARROW (RIGHT)
R6-2L	24X30	5.00					ONE WAY (LEFT)
R6-2R	24X30	5.00					ONE WAY (RIGHT)
R10-6	24X36	6.00					STOP HERE ON RED (45° ARROW)
R11-2	48X30	10.00	4	40.0			ROAD CLOSED
R11-3a	60X30	12.50	2	25.0			ROAD CLOSED XX MILES AHEAD LOCAL TRAFFIC ONLY
R11-4	60X30	12.50					ROAD CLOSED TO THRU TRAFFIC
S4-4	36X15	3.75					WHEN FLASHING
CONST-3A	60X48	20.00					FINE SIGN WITH FLAGS
CONST-3X	56X12	4.67					SPEEDING/PASSING (PLATE)
MISCELLANEOUS SIGNS							
.	.	.	.	.			.
616-10.05 CONSTRUCTION SIGNS TOTAL				195.0			
616-10.10 RELOCATED SIGNS TOTAL							

ITEM NUMBER	TOTAL QTY	DESCRIPTION
612-20.08		IMPACT ATTENUATOR (8 SAND BARRELS)
612-20.09		IMPACT ATTENUATOR (9 SAND BARRELS)
612-20.10		IMPACT ATTENUATOR (10 SAND BARRELS)
612-20.12		IMPACT ATTENUATOR (12 SAND BARRELS)
612-20.14		IMPACT ATTENUATOR (14 SAND BARRELS)
612-20.17		IMPACT ATTENUATOR (17 SAND BARRELS)
612-20.19		IMPACT ATTENUATOR (19 SAND BARRELS)
612-20.20		REPLACEMENT SAND BARREL
612-20.30		IMPACT ATTENUATOR ARRAY (RELOCATION)
612-30.00A		TRUCK OR TRAILER MOUNTED ATTENUATOR (TMA)
616-10.07		SPEED LIMIT AND STROBE LIGHT ASSEMBLY
616-10.08		ADVANCED WARNING RAIL SYSTEM
616-10.20		CHANNELIZER (DRUM-LIKE)
616-10.22		CHANNELIZER (CONES)
616-10.24		CHANNELIZER (TRIM LINE) WITH LIGHT
616-10.25		CHANNELIZER (TRIM LINE)
616-10.26		CHANNELIZER (VERTICAL PANEL)
616-10.27		CHANNELIZER (VERTICAL PANEL) WITH LIGHT
616-10.28		CHANNELIZER
616-10.30	6	TYPE III MOVEABLE BARRICADE
616-10.31		TYPE III MOVEABLE BARRICADE WITH LIGHT
616-10.33		DIRECTION INDICATOR BARRICADE
616-10.34		DIRECTION INDICATOR BARRICADE, WITH LIGHT
616-10.40		FLASHING ARROW PANEL
616-10.47		TYPE III OBJECT MARKER
616-10.51		WARNING LIGHT, TYPE A
616-10.52	8	WARNING LIGHT, TYPE B
616-10.53		WARNING LIGHT, TYPE C
616-10.70		TUBULAR MARKER
616-10.95		RADAR SPEED ADVISORY SYSTEM
616-10.96		CHANGEABLE MESSAGE SIGN, COMMISSION FURNISHED/RETAINED
616-10.98	2	CHANGEABLE MESSAGE SIGN, CONTRACTOR FURNISHED/RETAINED
616-11.00		CHANGEABLE MESSAGE SIGN, CONTRACTOR FURNISHED/COMMISSION RETAINED
616-11.20		INSTALLING "DRIVE SMART", 48 IN. X 48 IN. SIGN
616-11.33A		INSTALLING "POINT OF PRESENCE", 96 IN. X 48 IN. SIGN
616-11.34		INSTALLING "POINT OF PRESENCE", 36 IN. X 48 IN. SIGN
617-36.00D		CONTRACTOR FURNISHED/RETAINED TEMPORARY TRAFFIC BARRIER
617-36.02B		CONTRACTOR FURNISHED/COMMISSION RETAINED TEMPORARY TRAFFIC BARRIER
617-40.00A		TEMPORARY TRAFFIC BARRIER HEIGHT TRANSITION
617-50.10A		RELOCATING TEMPORARY TRAFFIC BARRIER
617-60.00B		COMMISSION FURNISHED/RETAINED TEMPORARY TRAFFIC BARRIER
617-70.00B		COMMISSION FURNISHED/RETAINED TEMPORARY TRAFFIC BARRIER HEIGHT TRANSITION
620-80.65		TEMPORARY RAISED PAVEMENT MARKER
901-94.00		TEMPORARY LIGHTING
902-94.00		TEMPORARY TRAFFIC SIGNALS
902-94.01		TEMPORARY TRAFFIC SIGNALS AND LIGHTING

Detailed Sept. 2016
Checked Sept. 2016

SCHEDULE OF QUANTITIES
2 OF 2

STATE OF MISSOURI
STEPHEN M. SEIDER
NUMBER E-24698
REGISTERED PROFESSIONAL ENGINEER

DATE PREPARED: 2/3/2017
STATE: MO | SHEET NO.: 2BS
ROUTE: BIG HOLLOW
COUNTY: JEFFERSON
JOB NO.: 14-6048
PROJECT NO.: STP-9900 (646)
BRIDGE NO.: 36900031

DATE	DESCRIPTION

JEFFERSON COUNTY PUBLIC WORKS DEPARTMENT
P.O. BOX 100
HILLSBORO, MO 63050
(636-797-5340) PHONE
(636-797-5565) FAX

ABNA
4140 LINDELL BOULEVARD
ST. LOUIS, MO 63108
PH. 314-454-0222
CERTIFICATE/LICENSE NO. 001501

IF A SEAL IS PRESENT ON THIS SHEET IT HAS BEEN ELECTRONICALLY SEALED AND DATED.

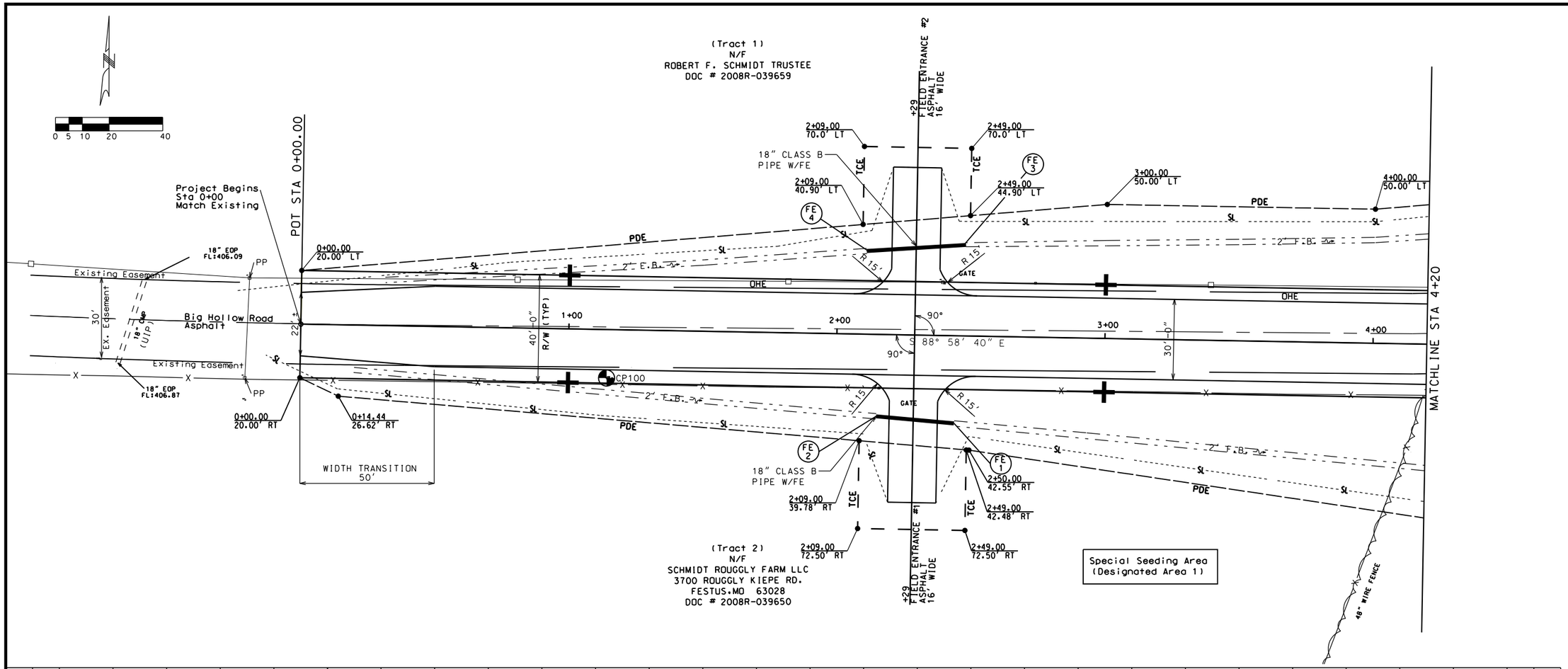

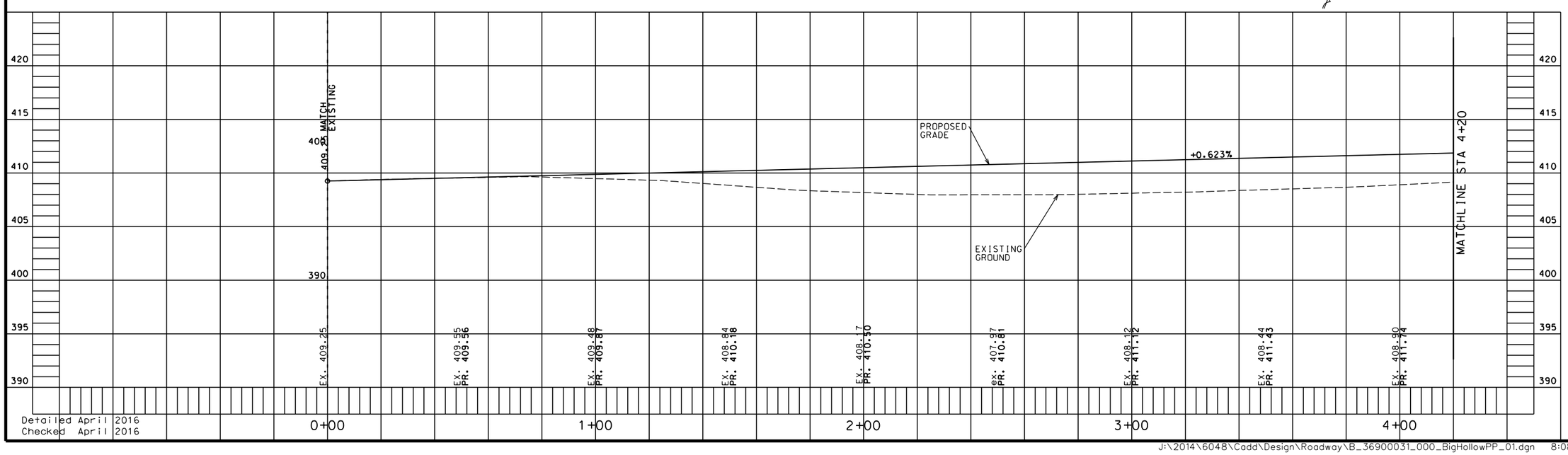

Detailed April 2016
Checked April 2016

STATE OF MISSOURI
STEPHEN M. SEIBERT
NUMBER E-24698
REGISTERED PROFESSIONAL ENGINEER

DATE PREPARED	
2/8/2017	
STATE	SHEET NO.
MO	3
ROUTE	
BIG HOLLOW	
COUNTY	
JEFFERSON	
JOB NO.	
14-6048	
PROJECT NO.	
STP-9900(646)	
BRIDGE NO.	
36900031	

DATE	DESCRIPTION

IF A SEAL IS PRESENT ON THIS SHEET IT HAS BEEN ELECTRONICALLY SEALED AND DATED.

JEFFERSON COUNTY PUBLIC WORKS
DEPARTMENT
P.O. BOX 100
HILLSBORO, MO 63050
(636-797-5340) PHONE
(636-797-5565) FAX

ABNA
4140 LINDELL BOULEVARD
ST. LOUIS, MO 63108
PH. 314-454-0222
CERTIFICATE/LICENSE NO. 001501

J:\2014\6048\Cadd\Design\Roadway\B_36900031_000_BigHollowPP_01.dgn 8:08:35 AM 2/8/2017

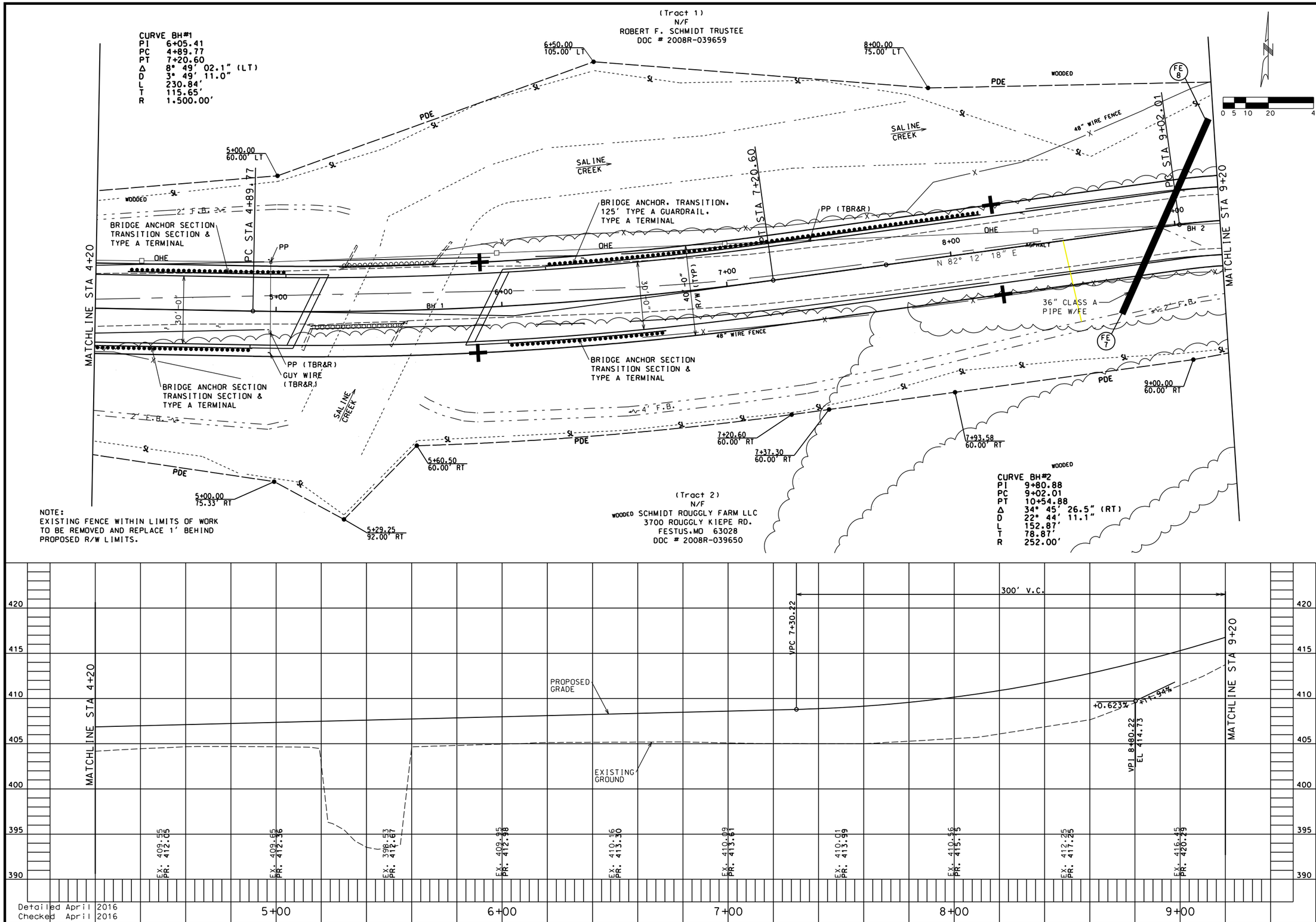

Detailed April 2016
Checked April 2016

STATE OF MISSOURI
STEPHEN M. SEMPEK
NUMBER
E-24698
REGISTERED PROFESSIONAL ENGINEER

DATE PREPARED	2/3/2017
STATE	MO
SHEET NO.	4
ROUTE	BIG HOLLOW
COUNTY	JEFFERSON
JOB NO.	14-6048
PROJECT NO.	STP-9900(646)
BRIDGE NO.	36900031

DATE	DESCRIPTION

IF A SEAL IS PRESENT ON THIS SHEET IT HAS BEEN ELECTRONICALLY SEALED AND DATED.

JEFFERSON COUNTY PUBLIC WORKS
DEPARTMENT

P.O. BOX 100
HILLSBORO, MO 63050
(636-797-5340) PHONE
(636-797-5565) FAX

ABNA
4140 LINDELL BOULEVARD
ST. LOUIS, MO 63108
PH. 314-454-0222
CERTIFICATE/LICENSE NO. 001501

J:\2014\6048\Cadd\Design\Roadway\B_36900031_000_BigHollowPP_02.dgn 1:45:40 PM 2/3/2017

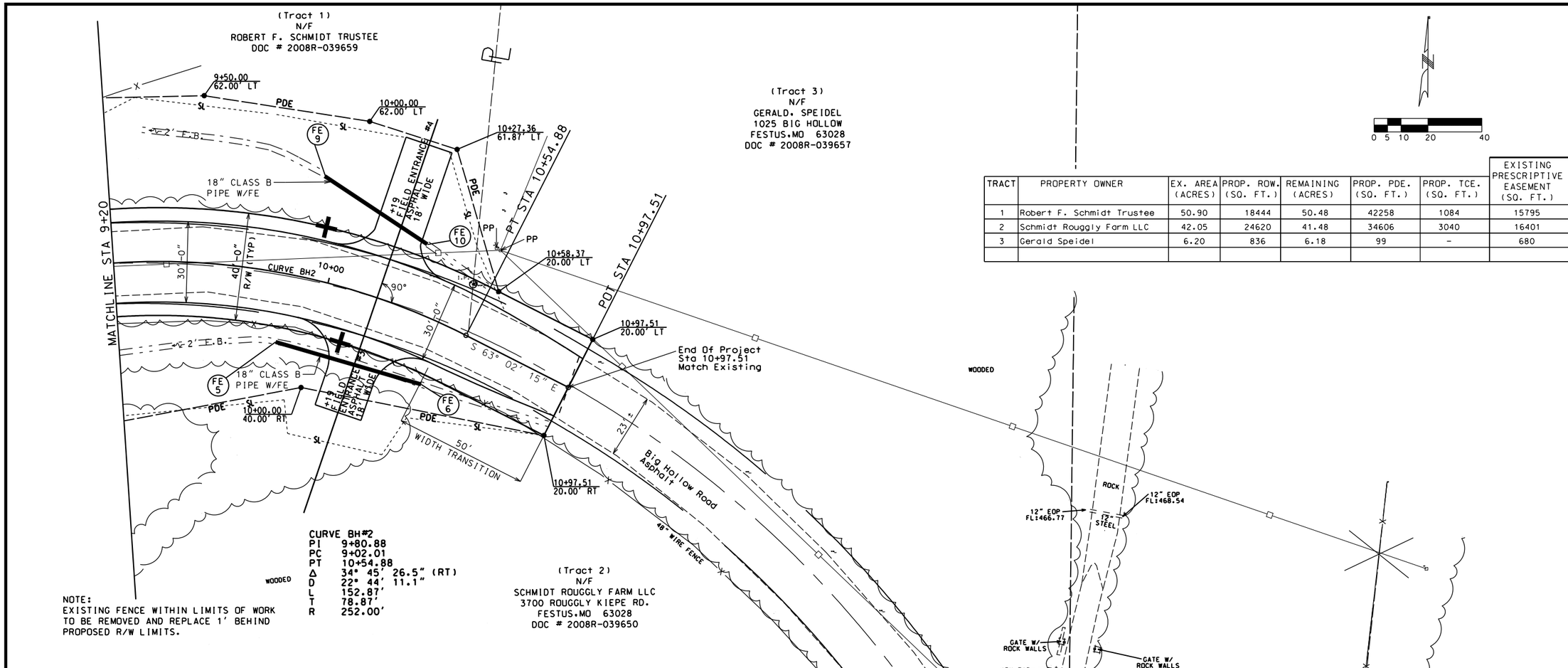

TRACT	PROPERTY OWNER	EX. AREA (ACRES)	PROP. ROW. (SQ. FT.)	REMAINING (ACRES)	PROP. PDE. (SQ. FT.)	PROP. TCE. (SQ. FT.)	EXISTING PRESCRIPTIVE EASEMENT (SQ. FT.)
1	Robert F. Schmidt Trustee	50.90	18444	50.48	42258	1084	15795
2	Schmidt Rouggly Farm LLC	42.05	24620	41.48	34606	3040	16401
3	Gerald Speidel	6.20	836	6.18	99	-	680

CURVE BH#2
PI 9+80.88
PC 9+02.01
PT 10+54.88
Δ 34° 45' 26.5" (RT)
D 22° 44' 11.1"
L 152.87'
T 78.87'
R 252.00'

NOTE:
EXISTING FENCE WITHIN LIMITS OF WORK TO BE REMOVED AND REPLACE 1' BEHIND PROPOSED R/W LIMITS.

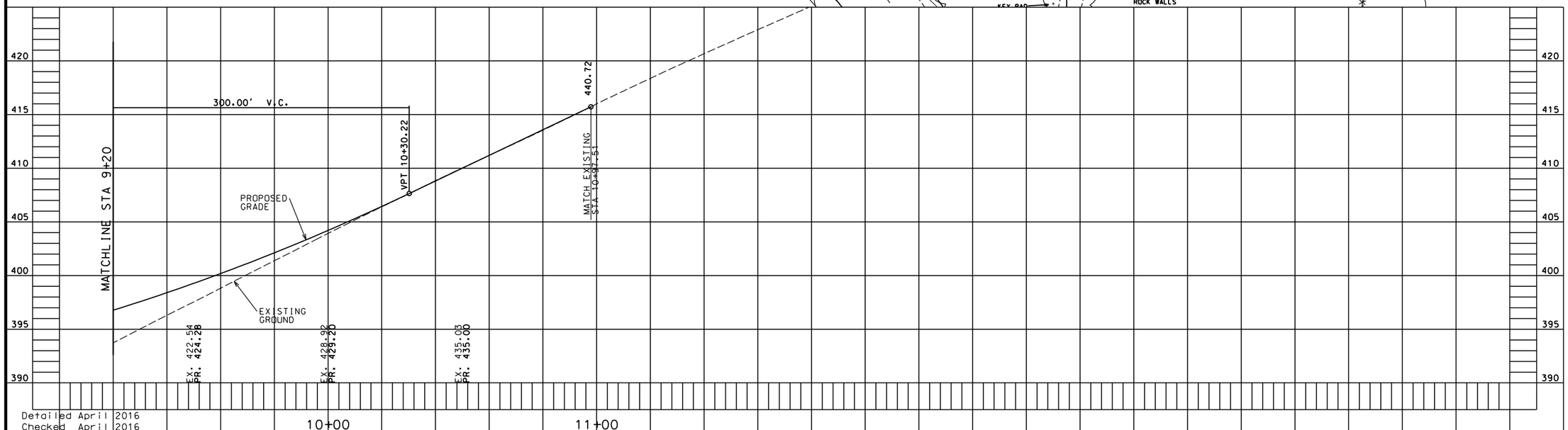

Detailed April 2016
Checked April 2016

STATE OF MISSOURI
STEPHEN M. SEIDER
NUMBER E-24698
REGISTERED PROFESSIONAL ENGINEER

DATE PREPARED 2/3/2017

STATE	SHEET NO.
MO	5

ROUTE BIG HOLLOW

COUNTY JEFFERSON

JOB NO. 14-6048

PROJECT NO. STP-9900(646)

BRIDGE NO. 36900031

DATE	DESCRIPTION

IF A SEAL IS PRESENT ON THIS SHEET IT HAS BEEN ELECTRONICALLY SEALED AND DATED.

JEFFERSON COUNTY PUBLIC WORKS DEPARTMENT
P.O. BOX 100
HILLSBORO, MO 63050
(636-797-5340) PHONE
(636-797-5565) FAX

ABNA
4140 LINDELL BOULEVARD
ST. LOUIS, MO 63108
PH. 314-454-0222
CERTIFICATE/LICENSE NO. 001501

MAINLINE BIG HOLLOW ROAD LAYOUT COORDINATES

Point Description	North	East
Control Point TRP-400	836,316.52	877,258.67
Control Point TRP-401	836,340.25	876,773.43
Control Point TRP-402	835,977.32	878,450.91
P.O.T. Sta. 0+00	836,336.61	877,144.65
P.C. Sta. 4+89.77 CUR#1	836,327.87	877,634.34
P.I. Sta. 6+05.41 CUR#1	836,325.81	877,749.97
P.T. Sta. 7+20.60 CUR#1	836,341.50	877,864.54
P.C. Sta. 9+02.01 CUR#2	836,366.10	878,044.28
P.I. Sta. 9+80.88 CUR#2	836,376.80	878,122.42
P.T. Sta. 10+54.88 CUR#2	836,341.04	878,192.71
P.O.T. Sta. 10+97.51	836,321.71	878,230.71

DRIVEWAY LAYOUT COORDINATES

Point Description	North	East
Field Entrance #1 P.O.T. Sta. 0+00 = ℄ Big Hollow 2+29.00	836,332.53	877,373.62
Field Entrance #1 P.O.T. Sta 0+62.50	836,270.04	877,372.50
Field Entrance #2 P.O.T. Sta. 0+00 = ℄ Big Hollow 2+29.00	836,332.53	877,373.62
Field Entrance #2 P.O.T. Sta 0+62.50	836,395.02	877,374.73
Field Entrance #3 P.O.T. Sta. 0+00 = ℄ Big Hollow 10+19.00	836,354.98	878,159.69
Field Entrance #3 P.O.T. Sta 0+45.00	836,312.38	878,145.18
Field Entrance #4 P.O.T. Sta. 0+00 = ℄ Big Hollow 10+19.00	836,354.98	878,159.69
Field Entrance #4 P.O.T. Sta 0+59.90	836,412.17	878,192.84

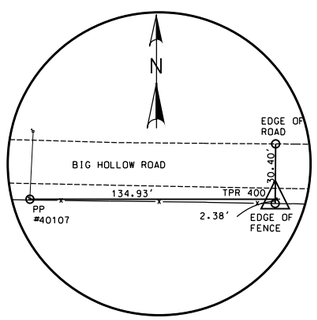

TPR-400

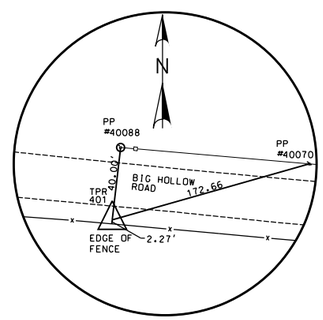

TPR-401

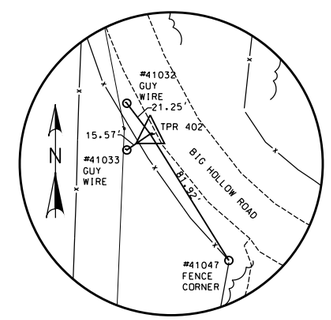

TPR-402

COORDINATE POINTS

Detailed Sept. 2016
Checked Sept. 2016

Note: This drawing is not to scale. Follow dimensions.

STATE OF MISSOURI
STEPHEN M. SEELE
NUMBER E-24698
REGISTERED PROFESSIONAL ENGINEER

DATE PREPARED 2/3/2017

STATE	SHEET NO.
MO	8

ROUTE: BIG HOLLOW
COUNTY: JEFFERSON
JOB NO. 14-6048
PROJECT NO. STP-9900 (646)
BRIDGE NO. 36900031

DATE	DESCRIPTION

IF A SEAL IS PRESENT ON THIS SHEET IT HAS BEEN ELECTRONICALLY SEALED AND DATED.

JEFFERSON COUNTY PUBLIC WORKS DEPARTMENT
P.O. BOX 100
HILLSBORO, MO 63050
(636-797-5340) PHONE
(636-797-5565) FAX

ABNA
4140 LINDELL BOULEVARD
ST. LOUIS, MO 63108
PH. 314-454-0222
CERTIFICATE/LICENSE NO. 001501

J:\2014\6048\Cadd\Design\Roadway\B_36900031_007_Coordinate Points.dgn 1:48:08 PM 2/3/2017

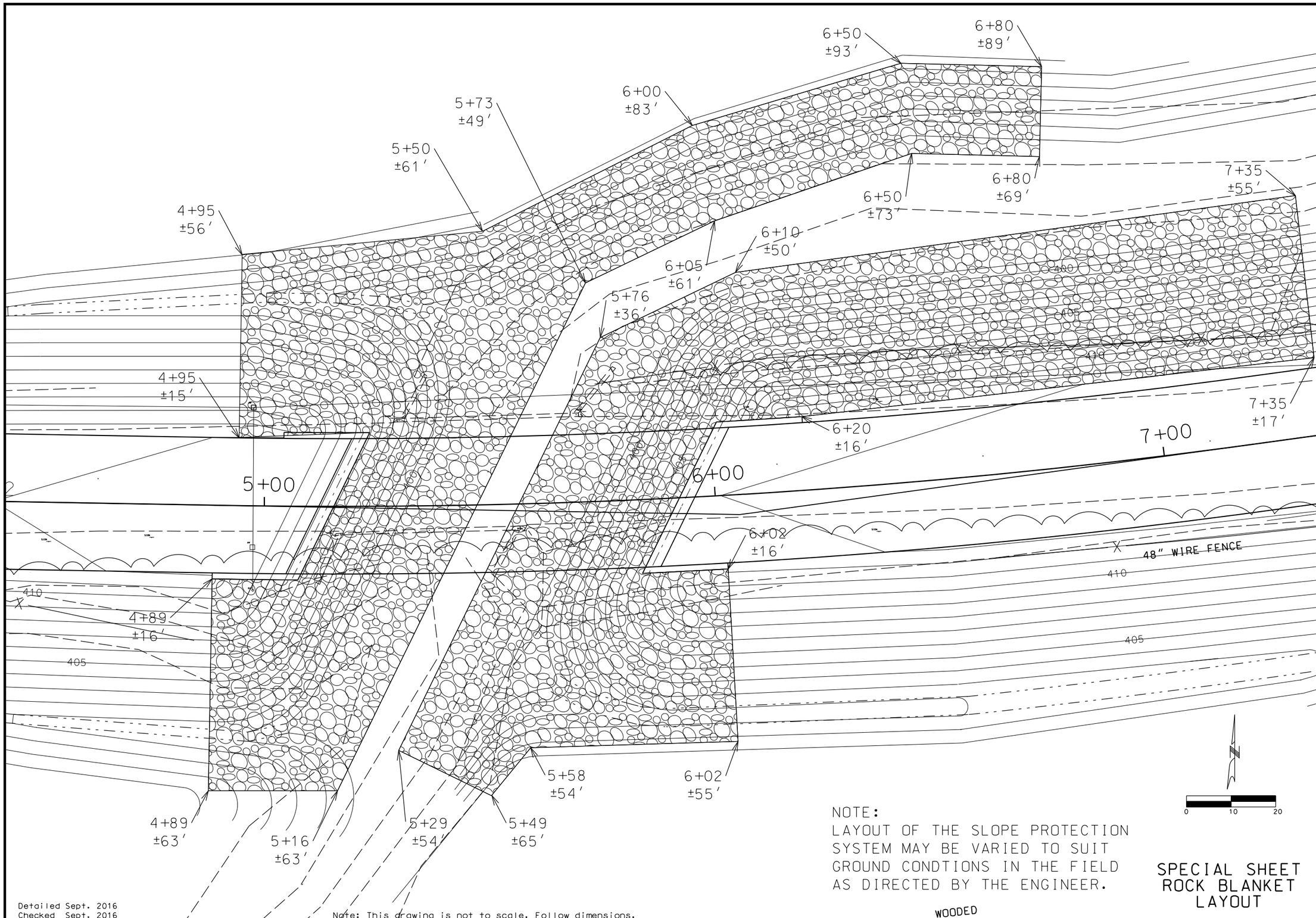

NOTE:
LAYOUT OF THE SLOPE PROTECTION SYSTEM MAY BE VARIED TO SUIT GROUND CONDTIONS IN THE FIELD AS DIRECTED BY THE ENGINEER.

SPECIAL SHEET ROCK BLANKET LAYOUT

Detailed Sept. 2016
Checked Sept. 2016

Note: This drawing is not to scale. Follow dimensions.

STATE OF MISSOURI
STEPHEN M. SEIDEL
NUMBER E-24698
REGISTERED PROFESSIONAL ENGINEER

DATE PREPARED	2/3/2017
STATE	MO
SHEET NO.	9
ROUTE	BIG HOLLOW
COUNTY	JEFFERSON
JOB NO.	14-6048
PROJECT NO.	STP-9900 (646)
BRIDGE NO.	36900031

DESCRIPTION

DATE

IF A SEAL IS PRESENT ON THIS SHEET IT HAS BEEN ELECTRONICALLY SEALED AND DATED.

JEFFERSON COUNTY PUBLIC WORKS DEPARTMENT
P.O. BOX 100
HILLSBORO, MO 63050
(636-797-5340) PHONE
(636-797-5565) FAX

ABNA
4140 LINDELL BOULEVARD
ST. LOUIS, MO 63108
PH. 314-454-0222
CERTIFICATE/LICENSE NO. 001501

J:\2014\6048\Cadd\Design\Roadway\B-36900031_000_ROCK BLANKET.dgn 1:49:27 PM 2/3/2017

RIPRAP GRADATIONS

GRAD NO.	PERCENT PASSING ROCK SIZE (LBS)									
	1500	1000	700	500	300	250	150	60	45	30
R-700	100		50-100		15-50			0-15		

Note:
Values in table represent percent by weight of stones lighter than the mass specified.

BEDDING MATERIAL GRADATIONS

GRAD NO.	PERCENT PASSING SIEVES				
	4 IN	3 IN	2 IN	1 ½ IN	NO. 4
RR 2	100		53 ±23		8 ±8

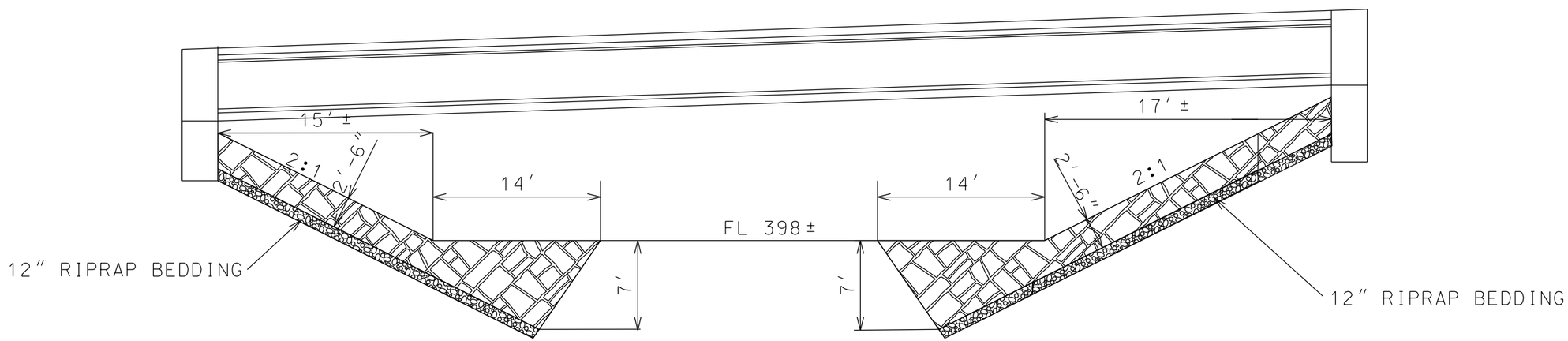

SECTION A-A
(RIGHT ANGLE OPENING TO STREAM)

SPECIAL SHEET
RIPRAP
DETAILS

Detailed Sept. 2016
Checked Sept. 2016

Note: This drawing is not to scale. Follow dimensions.

STATE OF MISSOURI
STEPHEN M. SEWELL
NUMBER
E-24698
REGISTERED PROFESSIONAL ENGINEER

DATE PREPARED	2/3/2017
STATE	MO
SHEET NO.	10
ROUTE	BIG HOLLOW
COUNTY	JEFFERSON
JOB NO.	14-6048
PROJECT NO.	STP-9900 (646)
BRIDGE NO.	36900031

DATE	DESCRIPTION

IF A SEAL IS PRESENT ON THIS SHEET IT HAS BEEN ELECTRONICALLY SEALED AND DATED.

JEFFERSON COUNTY PUBLIC WORKS
DEPARTMENT
P.O. BOX 100
HILLSBORO, MO 63050
(636-797-5340) PHONE
(636-797-5565) FAX

ABNA
4140 LINDELL BOULEVARD
ST. LOUIS, MO 63108
PH. 314-454-0222
CERTIFICATE/LICENSE NO. 001501

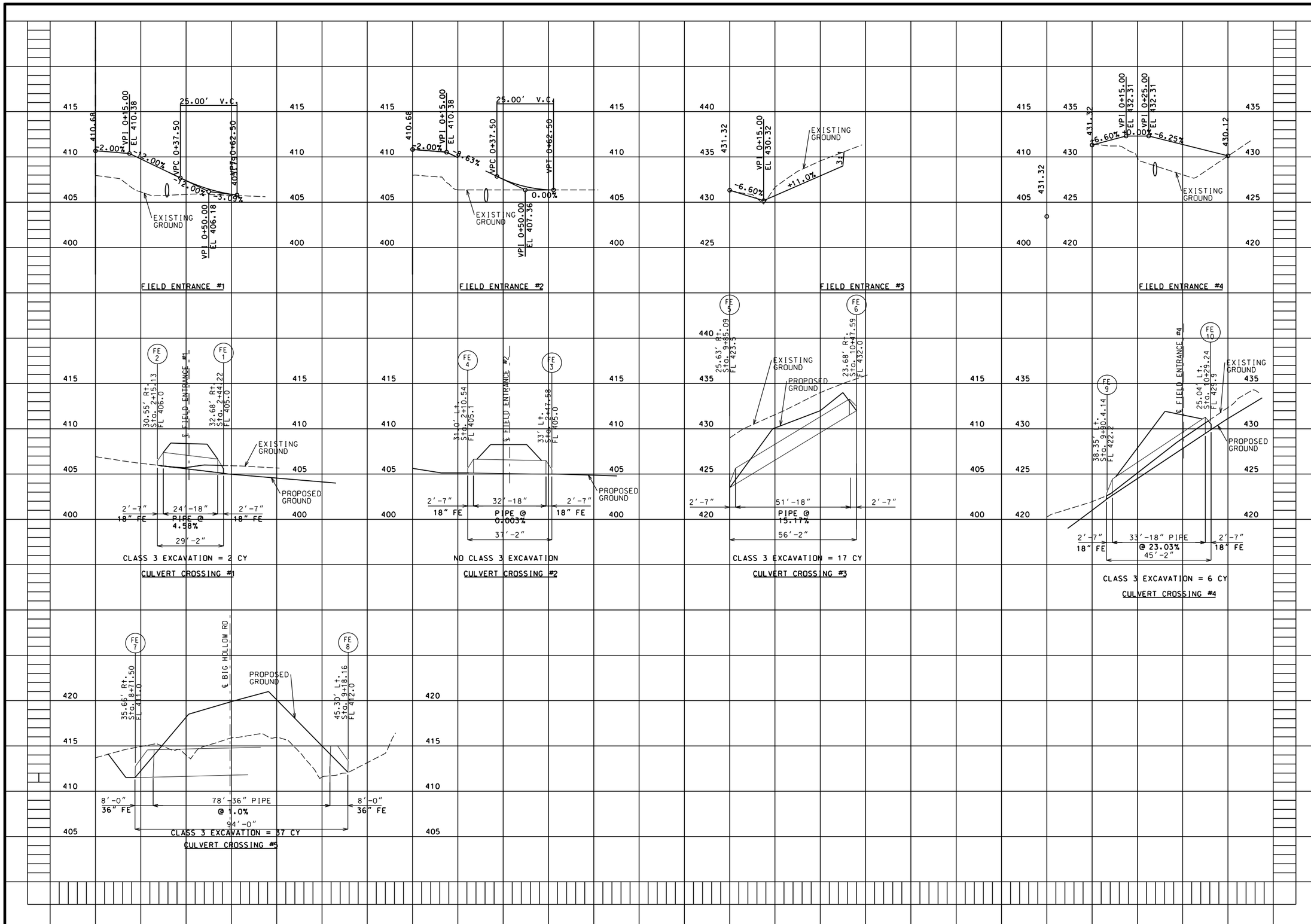

STATE OF MISSOURI
STEPHEN L. STOBBE
NUMBER E-24698
REGISTERED PROFESSIONAL ENGINEER

DATE PREPARED	2/3/2017
STATE	MO
SHEET NO.	11
ROUTE	BIG HOLLOW
COUNTY	JEFFERSON
JOB NO.	14-6048
PROJECT NO.	STP-9900 (646)
BRIDGE NO.	36900031

DESCRIPTION

DATE

IF A SEAL IS PRESENT ON THIS SHEET IT HAS BEEN ELECTRONICALLY SEALED AND DATED.

JEFFERSON COUNTY PUBLIC WORKS
DEPARTMENT

P.O. BOX 100
HILLSBORO, MO 63050
(636-797-5340) PHONE
(636-797-5565) FAX

ABNA
4140 LINDELL BOULEVARD
ST. LOUIS, MO 63108
PH. 314-454-0222
CERTIFICATE/LICENSE NO. 001501

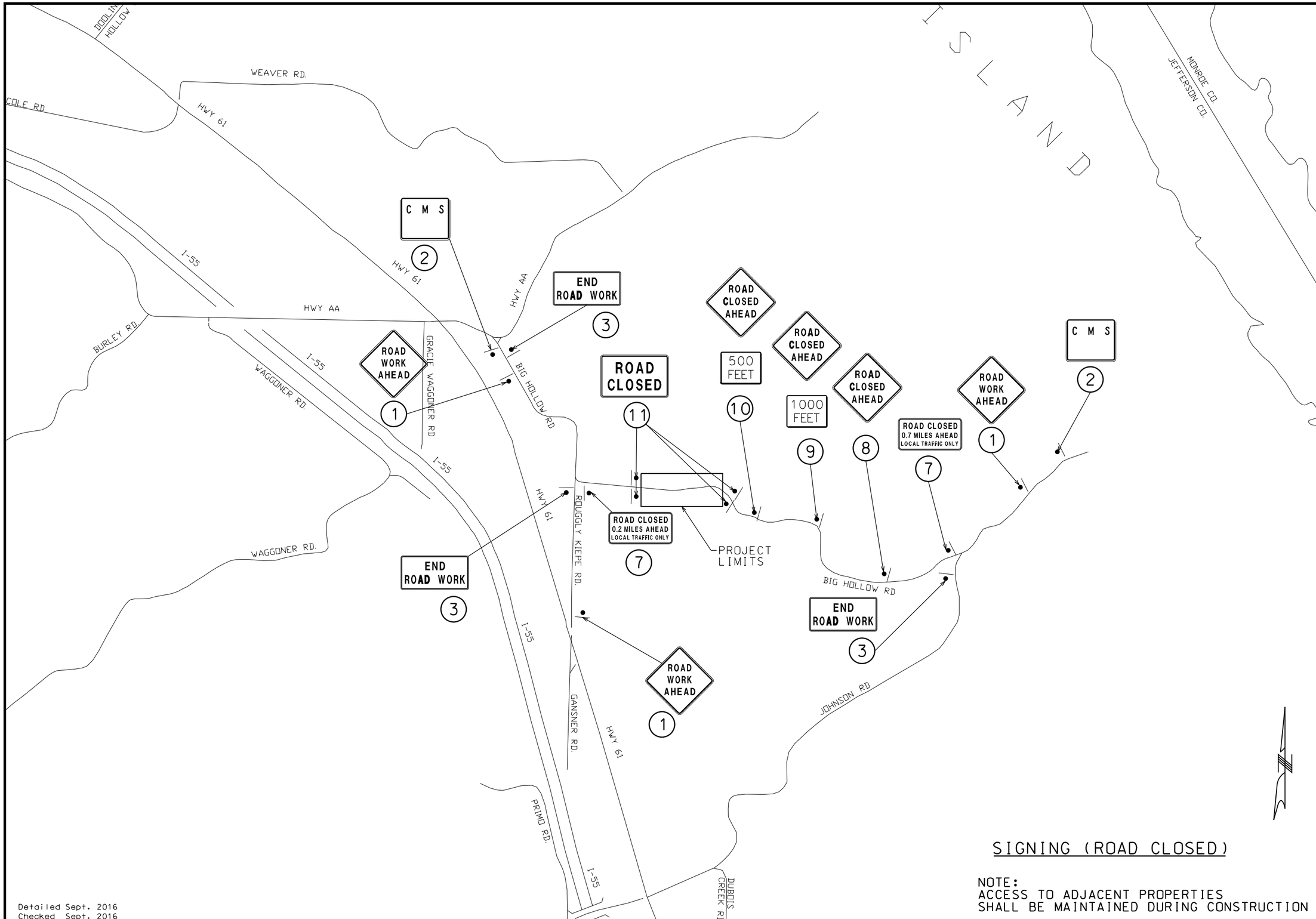

SIGNING (ROAD CLOSED)

NOTE:
ACCESS TO ADJACENT PROPERTIES
SHALL BE MAINTAINED DURING CONSTRUCTION

Detailed Sept. 2016
Checked Sept. 2016

STATE OF MISSOURI
STEPHEN M. SEELY
NUMBER E-24698
REGISTERED PROFESSIONAL ENGINEER

DATE PREPARED	2/3/2017
STATE	MO
SHEET NO.	12
ROUTE	BIG HOLLOW
COUNTY	JEFFERSON
JOB NO.	14-6048
PROJECT NO.	STP-9900 (646)
BRIDGE NO.	36900031

DATE	DESCRIPTION

JEFFERSON COUNTY PUBLIC WORKS DEPARTMENT
P.O. BOX 100
HILLSBORO, MO 63050
(636-797-5340) PHONE
(636-797-5565) FAX

ABNA
4140 LINDELL BOULEVARD
ST. LOUIS, MO 63108
PH. 314-454-0222
CERTIFICATE/LICENSE NO. 001501

IF A SEAL IS PRESENT ON THIS SHEET IT HAS BEEN ELECTRONICALLY SEALED AND DATED.

J:\2014\6048\Cadd\Design\Roadway\B_36900031_000_Traffic Control1.dgn 1:54:35 PM 2/3/2017

W020-1

1

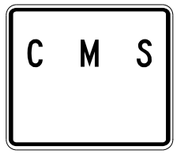

CHANGABLE
MESSAGE
SIGN

2

G020-2

3

NOT USED

4

NOT USED

5

NOT USED

6

R11-3a

7

W020-3

8

W020-3

W016-2

9

W020-3

W016-2

10

R11-2

11

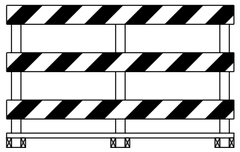

TYPE III
MOVEABLE BARRICADE

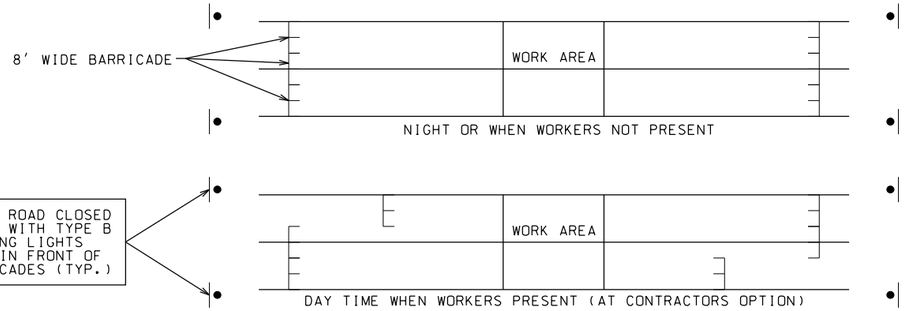

BARRICADE PLACEMENT

NOTES:

1. ALL CONSTRUCTION SIGNS SHALL BE NON-PORTABLE MOUNTED 48 HOURS PRIOR TO ROAD CLOSURE.
2. TYPE III BARRICADES SHALL EXTEND FROM SHOULDER TO SHOULDER.
3. CONTRACTOR IS RESPONSIBLE FOR UTILITY LOCATES PRIOR TO PLACING SIGN POSTS.

Detailed Sept. 2016
Checked Sept. 2016

TRAFFIC CONTROL
2 OF 2

STATE OF MISSOURI
STEPHEN M. SEELY
NUMBER
E-24698
REGISTERED PROFESSIONAL ENGINEER

IF A SEAL IS PRESENT ON THIS SHEET IT HAS BEEN ELECTRONICALLY SEALED AND DATED.

DATE PREPARED	2/3/2017
STATE	MO
SHEET NO.	13
ROUTE	BIG HOLLOW
COUNTY	JEFFERSON
JOB NO.	14-6048
PROJECT NO.	STP-9900 (646)
BRIDGE NO.	36900031

DATE	DESCRIPTION

JEFFERSON COUNTY PUBLIC WORKS
DEPARTMENT
P.O. BOX 100
HILLSBORO, MO 63050
(636-797-5340) PHONE
(636-797-5565) FAX

ABNA
4140 LINDELL BOULEVARD
ST. LOUIS, MO 63108
PH. 314-454-0222
CERTIFICATE/LICENSE NO. 001501

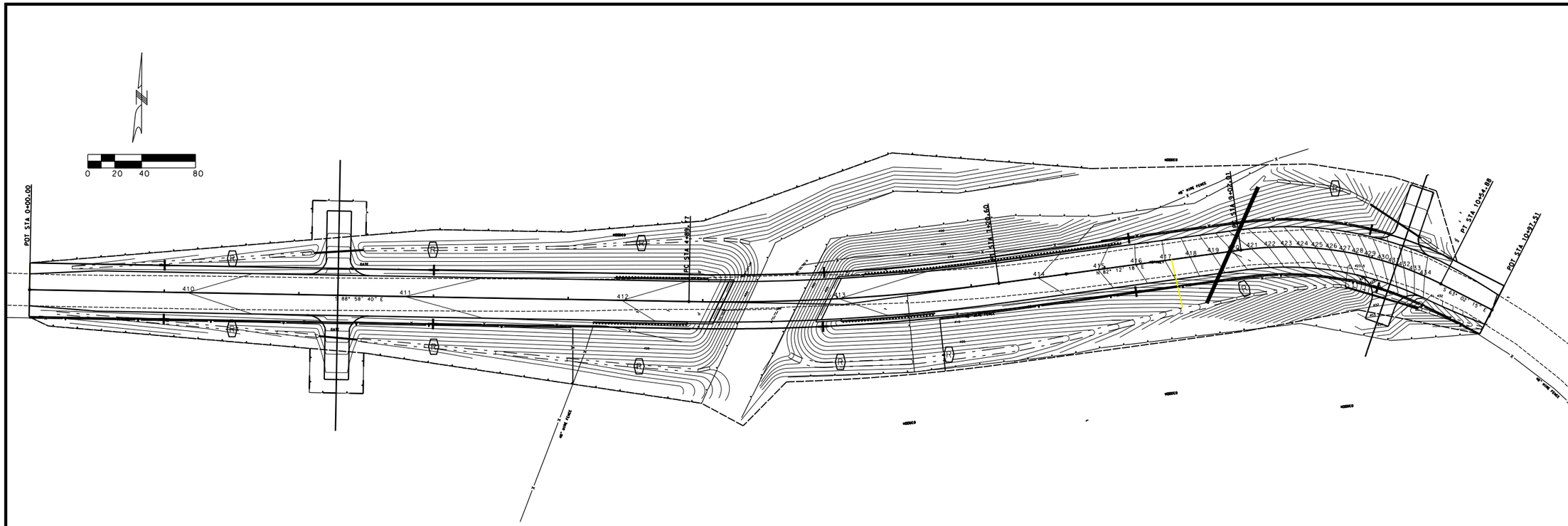

ROCK DITCH CHECK	
LOCATION	WIDTH FEET
RT. STA. 1+50	8
LT. STA. 1+50	8
RT. STA. 4+50	8
LT. STA. 4+50	8
RT. STA. 6+00	12
RT. STA. 6+75	12
RT. STA. 9+00	8
LT. STA. 9+50	8
TOTAL	72 LIN FT

SILT FENCE	
LOCATION	LENGTH
21' RT. STA. 0+00 TO 39.78' RT. STA. 2+09 =	209 LIN. FT.
37.78' RT. STA. 2+09 TO 72.5' RT. STA. 2+09 =	35 LIN. FT.
72.5' RT. STA. 2+09 TO 72.5' RT. STA. 2+49 =	40 LIN. FT.
72.5' RT. STA. 2+49 TO 42.55' RT. STA. 2+49 =	30 LIN. FT.
42.48' RT. STA. 2+49 TO 75.33' RT. STA. 5+00=	250 LIN. FT.
75.33' RT. STA. 5+00 TO 44' LT. STA. 5+53 =	120 LIN. FT.
44' LT. STA. 5+53 TO 63' LT. STA. 6+00 =	51 LIN. FT.
63' LT. STA. 6+00 TO 76' LT. STA. 6+50 =	76 LIN. FT.
76' LT. STA. 6+50 TO 70' LT. STA. 7+00 =	50 LIN. FT.
70' LT. STA. 7+00 TO 72' LT. STA. 8+00 =	100 LIN. FT.
20' LT. STA. 0+00 TO 40' LT. STA. 2+09 =	209 LIN. FT.
40' LT. STA. 2+09 TO 70' LT. STA. 2+09 =	30 LIN. FT.
70' LT. STA. 2+09 TO 70' LT. STA. 2+49 =	40 LIN. FT.
70' LT. STA. 2+49 TO 44' LT. STA. 2+49 =	26 LIN. FT.
44' LT. STA. 2+49 TO 50' LT. STA. 3+00 =	51 LIN. FT.
50' LT. STA. 3+00 TO 60' LT. STA. 5+00 =	200 LIN. FT.
60' LT. STA. 5+00 TO 105' LT. STA. 6+50 =	156 LIN. FT.
105' LT. STA. 6+50 TO 75' LT. STA. 8+00 =	153 LIN. FT.
61' LT. STA. 9+25 TO 40' LT. STA. 8+72 =	57 LIN. FT.
40' LT. STA. 8+72 TO 50' LT. STA. 7+37 =	135 LIN. FT.
50' LT. STA. 7+37 TO 45' LT. STA. 5+95 =	142 LIN. FT.
45' LT. STA. 5+95 TO 89' RT. STA. 5+26 =	150 LIN. FT.
56' RT. STA. 5+63 TO 59' RT. STA. 6+50 =	87 LIN. FT.
59' RT. STA. 6+50 TO 56' RT. STA. 9+50 =	300 LIN. FT.
56' RT. STA. 9+50 TO 54' RT. STA. 10+45 =	95 LIN. FT.
54' RT. STA. 10+45 TO 20' RT. STA. 11+00 =	73 LIN. FT.
TOTAL	2865 LIN FT

SILT FENCE

(R) ROCK DITCH CHECK

SPECIAL SHEET
EROSION CONTROL

Detailed Sept. 2016
Checked Sept. 2016

STATE OF MISSOURI
STEPHEN M. SEEMUTH
NUMBER
E-24698
REGISTERED PROFESSIONAL ENGINEER

DATE PREPARED	2/3/2017
STATE	MO
SHEET NO.	14
ROUTE	BIG HOLLOW
COUNTY	JEFFERSON
JOB NO.	14-6048
PROJECT NO.	STP-9900 (646)
BRIDGE NO.	36900031

IF A SEAL IS PRESENT ON THIS SHEET IT HAS BEEN ELECTRONICALLY SEALED AND DATED.

DATE	DESCRIPTION

JEFFERSON COUNTY PUBLIC WORKS
DEPARTMENT
P.O. BOX 100
HILLSBORO, MO 63050
(636-797-5340) PHONE
(636-797-5565) FAX

ABNA
4140 LINDELL BOULEVARD
ST. LOUIS, MO 63108
PH. 314-454-0222
CERTIFICATE/LICENSE NO. 001501

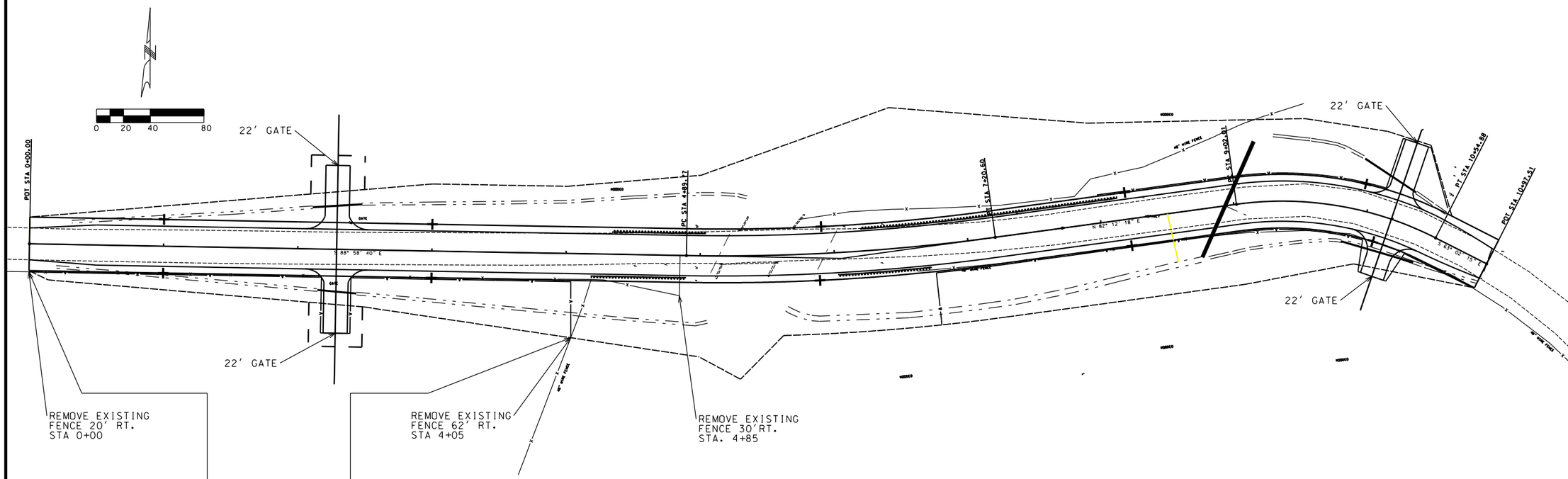

PROVIDE TEMPORARY 5-STRAND BARBED WIRE FENCE ALONG LIMITS OF PDE AND TCE PRIOR TO ANY FENCE REMOVAL

TEMPORARY 5 STRAND 48" BARBED WIRE FENCE	
LOCATION	LENGTH
21' RT. STA. 0+00 TO 39.78' RT. STA. 2+09 =	209 LIN. FT.
37.78' RT. STA. 2+09 TO 72.5' RT. STA. 2+09 =	35 LIN. FT.
72.5' RT. STA. 2+09 TO 72.5' RT. STA. 2+49 =	40 LIN. FT.
72.5' RT. STA. 2+49 TO 42.55' RT. STA. 2+49 =	30 LIN. FT.
42.48' RT. STA. 4+49 TO 62' RT. STA. 4+05 =	20 LIN. FT.
TOTAL	334 LIN FT

DRIVE GATES		
LOCATION	GATE WIDTH FEET	NUMBER
62.5' RT. STA. 2+29	22	1
62.5' LT. STA. 2+29	22	1
45' RT. STA. 10+19	22	1
60' LT. STA. 10+19	22	1
TOTAL		4 EACH

5 STRAND 48" BARBED WIRE FENCE	
LOCATION	LENGTH
21' RT. STA. 0+00 TO 21' RT. STA. 2+18 =	218 LIN. FT.
21' RT. STA. 2+18 TO 62' RT. STA. 2+18 =	41 LIN. FT.
62' RT. STA. 2+40 TO 21' RT. STA. 2+40 =	41 LIN. FT.
21' RT. STA. 2+40 TO 21' RT. STA. 4+05 =	165 LIN. FT.
21' RT. STA. 4+05 TO 62' RT. STA. 4+05 =	41 LIN. FT.
60' RT. STA. 6+75 TO 21' RT. STA. 6+75 =	39 LIN. FT.
21' RT. STA. 6+75 TO 21' RT. STA. 10+03 =	328 LIN. FT.
21' RT. STA. 10+03 TO 45' RT. STA. 10+06 =	24 LIN. FT.
45' RT. STA. 10+30 TO 21' RT. STA. 10+38 =	25 LIN. FT.
21' RT. STA. 10+38 TO 21' RT. STA. 11+00 =	62 LIN. FT.
21' LT. STA. 8+00 TO 21' LT. STA. 10+10 =	210 LIN FT.
TOTAL	1194 LIN FT

PROPOSED 48" BARBED WIRE FENCE

EXISTING FENCE

SPECIAL SHEET FENCING

Detailed Sept. 2016
Checked Sept. 2016

STATE OF MISSOURI
STEPHEN M. SEEMAN
NUMBER
E-24698
REGISTERED PROFESSIONAL ENGINEER

DATE PREPARED
2/3/2017

STATE	SHEET NO.
MO	15

ROUTE
BIG HOLLOW

COUNTY
JEFFERSON

JOB NO.
14-6048

PROJECT NO.
STP-9900 (646)

BRIDGE NO.
36900031

DATE	DESCRIPTION

JEFFERSON COUNTY PUBLIC WORKS
DEPARTMENT
P.O. BOX 100
HILLSBORO, MO 63050
(636-797-5340) PHONE
(636-797-5565) FAX

ABNA
4140 LINDELL BOULEVARD
ST. LOUIS, MO 63108
PH. 314-454-0222
CERTIFICATE/LICENSE NO. 001501

IF A SEAL IS PRESENT ON THIS SHEET IT HAS BEEN ELECTRONICALLY SEALED AND DATED.

(80') PRESTRESSED CONCRETE GIRDER SPAN

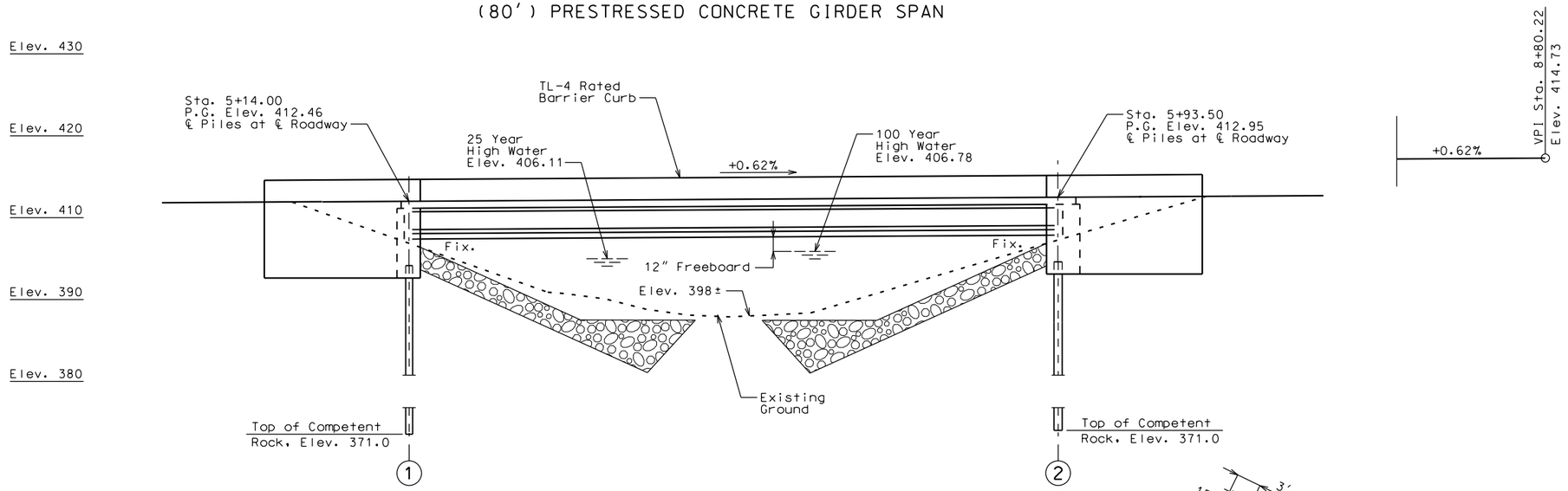

ELEVATION

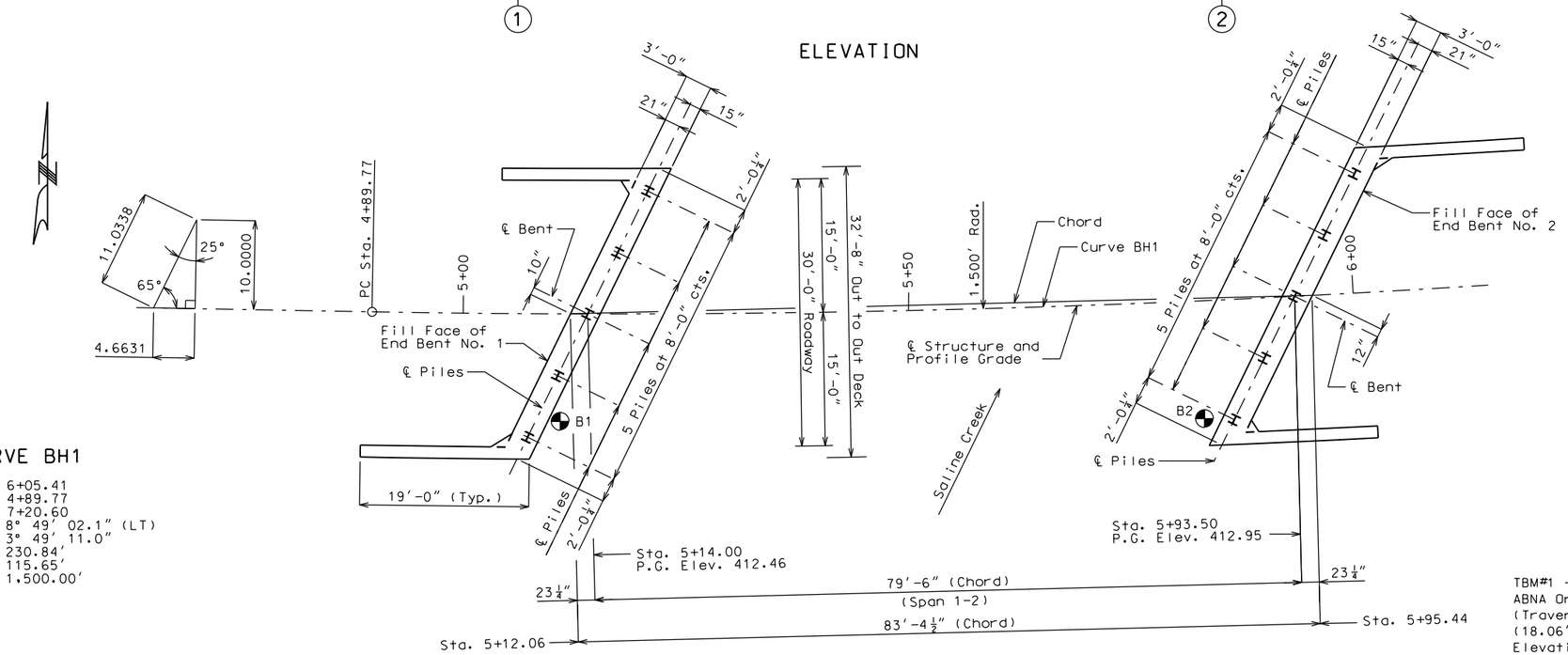

PLAN

CURVE BH1

PI	6+05.41
PC	4+89.77
PT	7+20.60
Δ	8° 49' 02.1" (LT)
D	3° 49' 11.0"
L	230.84'
T	115.65'
R	1,500.00'

"◐" Indicates location of borings.

Notice and Disclaimer Regarding Boring Log Data

The locations of all subsurface borings for this structure are shown on the bridge plan sheet for This structure. Boring data for the numbered locations is shown on Sheets No. 23 thru 25. The boring data for all locations indicated, as well as any other boring logs or other factual records of susurface data and investigations performed by the County for the design of the project, will be provided in the bridge electronic deliverable file or will be available from the Project Contact upon written request. No greater significance or weight should be given to the boring data depicted on the plan sheets than is subsurface data available from the County or elsewhere.

The County does not represent or warrant that any such boring data accurately depicts the conditions to be encountered in constructing this project. A contractor assumes all risks it may encounter in basing its bid prices, time or schedule of performance on the boring data depicted here or those available from the district, or on any other documentation not expressly warranted, which the contractor may obtain from the County.

Notes:

Roadway fill shall be completed to the final roadway section and up to the elevation of the bottom of the concrete beam within the limits of the structure and for not less than 25 feet in back of the fill face of the end bents before any piles are driven for any bents falling within the embankment section.

For General Notes, Pile and Footing Data and Estimated Quantities for Slab on Concrete I-Girder, see Sheet No. 2.

Dimensions shown in plan are horizontal.

TBM#1 - 5/8" Iron Rod with ABNA Orange Trav. Pnt. Cap. (Traverse Point 400) (18.06' Rt. Sta. 1+14.36): Elevation 409.18

TBM#2 - 5/8" Iron Rod with ABNA Orange Trav. Pnt. Cap (Traverse Point 401) (Description): Elevation 424.73

TBM #3 - 5/8" Iron Rod with ABNA Orange Trav. Pnt. Cap (Traverse Point 402) (Description): Elevation 480.54

BRIDGE: OVER SALINE CREEK

COUNTY ROAD: BIG HOLLOW

STA. 5+12.06

Detailed Sept. 2016
Checked Sept. 2016

Note: This drawing is not to scale. Follow dimensions.

STATE OF MISSOURI
STEPHEN K. SCHUPP
NUMBER E-24698
REGISTERED PROFESSIONAL ENGINEER

DATE PREPARED	2/3/2017
STATE	MO
SHEET NO.	16
ROUTE	BIG HOLLOW
COUNTY	JEFFERSON
JOB NO.	14-6048
PROJECT NO.	STP-9900 (646)
BRIDGE NO.	36900031

DATE	DESCRIPTION

JEFFERSON COUNTY PUBLIC WORKS
DEPARTMENT
P.O. BOX 100
HILLSBORO, MO 63050
(636-797-5340) PHONE
(636-797-5565) FAX

ABNA
4140 LINDELL BOULEVARD
ST. LOUIS, MO 63108
PH. 314-454-0222
CERTIFICATE/LICENSE NO. 001501

IF A SEAL IS PRESENT ON THIS SHEET IT HAS BEEN ELECTRONICALLY SEALED AND DATED.

Estimated Quantities

Item		Substr.	Superstr.	Total
Class 1 Excavation	cu. yard	202		202
Removal of Bridges	lump sum	1		1
Bridge Approach Slab (Minor Road)	sq. yard		134	134
Structural Steel Piles (10 in.)	linear foot	335		335
Class B Concrete (Substructure)	cu. yard	60.2		60.2
Slab on Concrete I-Girder	sq. yard		298.6	298.6
Safety Barrier Curb	linear foot		230	230
Type 4 (45") Prestressed Concrete I-Girder	linear foot		483	483
Steel Intermediate Diaphragm for P/S Concrete Girders	each		5	5
Slab Drain	each		6	6
Vertical Drain at End Bents	each	2		2
Plain Neoprene Bearing Pad	each		12	12

All concrete above the construction joint in the end bents is included in the Estimated Quantities for Slab on Concrete I-Girder.

All reinforcement in the end bents is included in the Estimated Quantities for Slab on Concrete I-Girder.

Cost of C4x5.4 channel shear connectors (ASTM A709 Grade A36) or Alternate Method, complete in place shall be considered completely covered in the contract.

All joint filler shall be in accordance with Sec 1057 for preformed sponge rubber expansion and partition joint filler, except as noted.

Estimated Quantities for Slab on Concrete I-Girder

Item		Total
Class B-2 Concrete (Superstructure on Concrete I-Girder)	cu. yard	97.6
Reinforcing Steel	pound	12,630
Reinforcing Steel (Epoxy Coated)	pound	20,820

The table of Estimated Quantities for Slab on Concrete I-Girder represents the quantities used by the County in preparing the cost estimate for concrete slabs. The area of the concrete slab will be measured to the nearest square yard with the horizontal dimensions as shown on the plan of slab. Payment for prestressed panels, conventional forms, all concrete and coated and uncoated reinforcing steel will be considered completely covered by the contract unit price for the slab. Variations may be encountered in the estimated quantities but the variations cannot be used for an adjustment in the contract unit price.

Method of forming the slab shall be as shown on the plans and in accordance with Sec 703. All hardware for forming the slab to be left in place as a permanent part of the structure shall be coated in accordance with ASTM A123 or ASTM B633 with a thickness class SC 4 and a finish type I, II or III.

The Estimated Quantities for Slab on Concrete I-Girder are based on skewed precast prestressed end panels.

The prestressed panel quantities are not included in the table of Estimated Quantities for Slab on Concrete I-Girder.

Class B-2 Concrete quantity is based on minimum top flange thickness.

Foundation Data

Type	Design Data	Bent No. 1	Bent No. 2
Load Bearing Plie	Pile Type and Size	HP 10x42	HP 10x42
	Number	5	5
	Approximate Length per Each ft	33	34
	Pile Driving Verification Method	DF	DF
	Design Bearing Nominal Axial Pile Compression Resistance kip	240	240
	Minimum Tip Penetration (Elev.) ft	371.0	371.0
	Criteria for Minimum Tip Penetration	Minimum Embedment into Natural Ground	Minimum Embedment into Natural Ground
	Hammer Energy Required ft-lb	8,000	8,000

Hydrologic Data

Drainage Area	=	3.6 sq. miles
Design Discharge	=	3,200 cu. ft./sec. (100 Years)
Design H. W. Elev.	=	406.78 feet (100 Years)
Estimated Backwater	=	1.76 feet

Overtopping Flood Data

Discharge:

Roadway	=	Less than 100 years
Bridge	=	Greater than 100 years

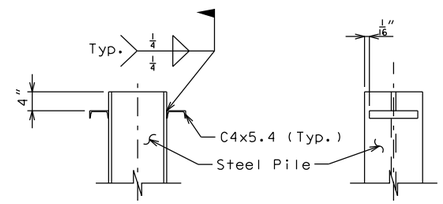

CHANNEL SHEAR CONNECTOR DETAIL
(Required for all piles)

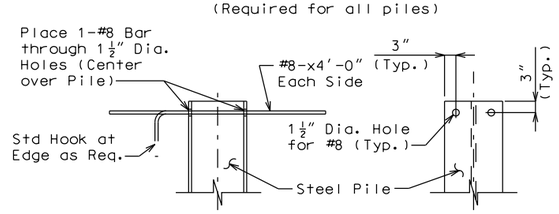

CHANNEL SHEAR CONNECTOR ALTERNATE METHOD
(Required for all piles)

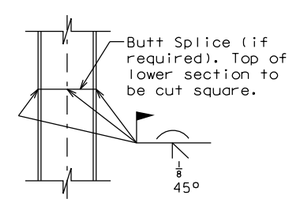

STEEL PILE SPLICE DETAIL

GENERAL NOTES:

Design Specifications:

2012 - AASHTO LRFD 6th Edition and 2013 Interim Revisions
Load and Resistance Factor Design
Seismic Performance Category B

Design Earthquake Response Spectral Acceleration Coefficient at 1.0 Second Period, SD_1= 0.56
Acceleration Coefficient (Effective Peak Ground Acceleration Coefficient) A_S= .18

Design Loading:

HL-93 (LRFD Superstructure, LRFD Substructure)
35#/Sq. Ft. Future Wearing Surface
Earth 120 #/Cu. Ft., Equivalent Fluid Pressure 45#/Cu. Ft.
Superstructure: Simply-supported, non-composite for dead load. Composite for live load.

Design Unit Stresses:

Class B Concrete (Substructure) f'c = 3,000 psi

Class B-1 Concrete (Safety Barrier Curb) f'c = 4,000 psi

Class B-2 Concrete (Superstructure, except Prestressed Girders and Safety Barrier Curb) f'c = 4,000 psi

Reinforcing Steel (Grade 60) fy = 60,000 psi

Steel Pile (ASTM A709 Grade 50) fb = 9,000 psi fy = 50,000 psi

For Precast Prestresssed Panel Stresses, see Sheet No. 12.

For Prestressed Girder Stresses, see Sheet No. 10.

Neoprene Pads:

Bearings shall be 60 durometer neoprene pads. Plain Neoprene Bearing Pads shall be in accordance with Sec 716.

Reinforcing Steel:

Minimum clearance to reinforcing steel shall be 1-1/2", unless otherwise shown.

Existing Structure:

Remove existing Bridge No. 3690003 over Saline Creek.

Construction Specifications:

The 2016 Edition of the Missouri Highway and Transportation Commission, "Missouri Standard Specifications for Highway Construction" supplemental revisions and the job specifications shall govern.

Miscellaneous:

"Sec" refers to the sections in the standard and supplemental specifications unless specified otherwise.

STATE OF MISSOURI
STEPHEN M. KOENIG
NUMBER E-24698
REGISTERED PROFESSIONAL ENGINEER

DATE PREPARED 2/3/2017
STATE MO
SHEET NO. 17
ROUTE BIG HOLLOW
COUNTY JEFFERSON
JOB NO. 14-6048
PROJECT NO. STP-9900 (646)
BRIDGE NO. 36900031

DESCRIPTION
DATE

IF A SEAL IS PRESENT ON THIS SHEET IT HAS BEEN ELECTRONICALLY SEALED AND DATED.

JEFFERSON COUNTY PUBLIC WORKS
DEPARTMENT
P.O. BOX 100
HILLSBORO, MO 63050
(636-797-5340) PHONE
(636-797-5565) FAX

ABNA
4140 LINDELL BOULEVARD
ST. LOUIS, MO 63108
PH. 314-454-0222
CERTIFICATE/LICENSE NO. 001501

GENERAL NOTES AND ESTIMATED QUANTITIES

Detailed Sept. 2016
Checked Sept. 2016

Note: This drawing is not to scale. Follow dimensions.

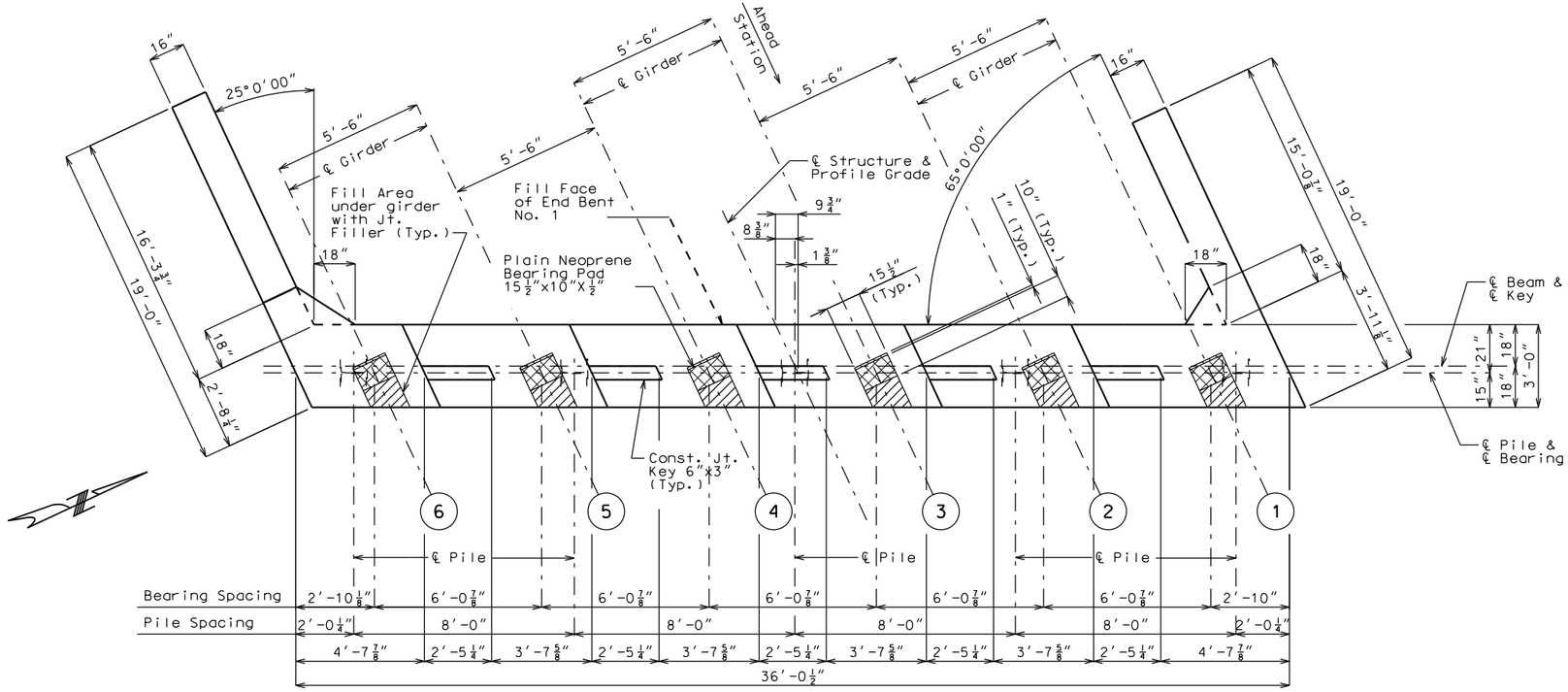

PLAN OF BEAM SHOWING DIMENSIONS

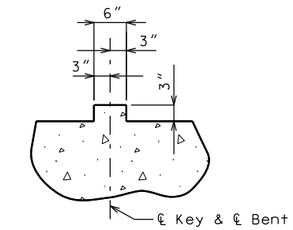

TYPICAL SECTION THRU KEY

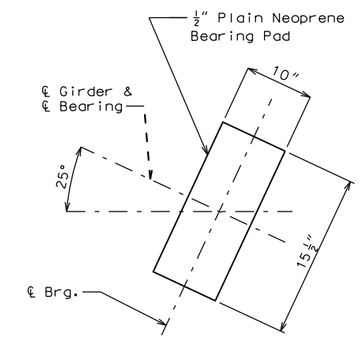

TYPICAL PLAN OF BEARINGS

6 Required

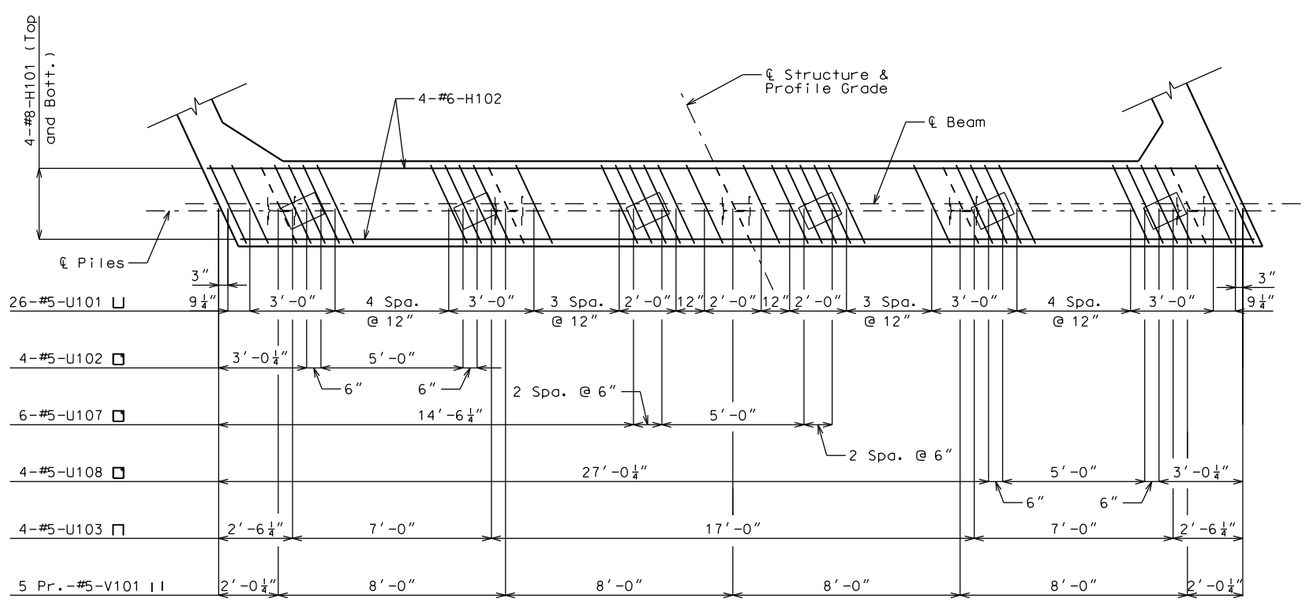

PLAN OF BEAM SHOWING REINFORCEMENT

Notes:

Work this Sheet with Sheets No. 4 and 5.

For details of Pile Anchors, see Sheet No. 2.

For details of Steel Pile Splice, see Sheet No. 2.

For details of Vertical Drain at End Bents, see Sheet No. 6.

All vertical reinforcing bars in the substructure beams or caps shall be field adjusted to clear piles by at least 1½".

All U-Bars and Pr. V-Bars in End Bent shall be placed parallel to ℄ Structure.

Substructure Quantity Table for End Bent No. 1		
Item		Quantity
Class 1 Excavation	cu. yard	104.5
Structural Steel Pile (10 in.)	linear foot	165
Class B Concrete (substructure)	cu. yard	30.1

Note: These quantities are included in the estimated quantities table on sheet no. 2.

DETAILS OF END BENT NO. 1

Detailed Sept. 2016
Checked Sept. 2016

Note: This drawing is not to scale. Follow dimensions.

STATE OF MISSOURI STEPHEN L. SCHOLZ NUMBER E-24698 REGISTERED PROFESSIONAL ENGINEER

DATE PREPARED	
2/3/2017	
STATE	SHEET NO.
MO	18
ROUTE	
BIG HOLLOW	
COUNTY	
JEFFERSON	
JOB NO.	
14-6048	
PROJECT NO.	
STP-9900 (646)	
BRIDGE NO.	
36900031	

DESCRIPTION

DATE

IF A SEAL IS PRESENT ON THIS SHEET IT HAS BEEN ELECTRONICALLY SEALED AND DATED.

JEFFERSON COUNTY PUBLIC WORKS DEPARTMENT
P.O. BOX 100
HILLSBORO, MO 63050
(636-797-5340) PHONE
(636-797-5565) FAX

ABNA
4140 LINDELL BOULEVARD
ST. LOUIS, MO 63108
PH. 314-454-0222
CERTIFICATE/LICENSE NO. 001501

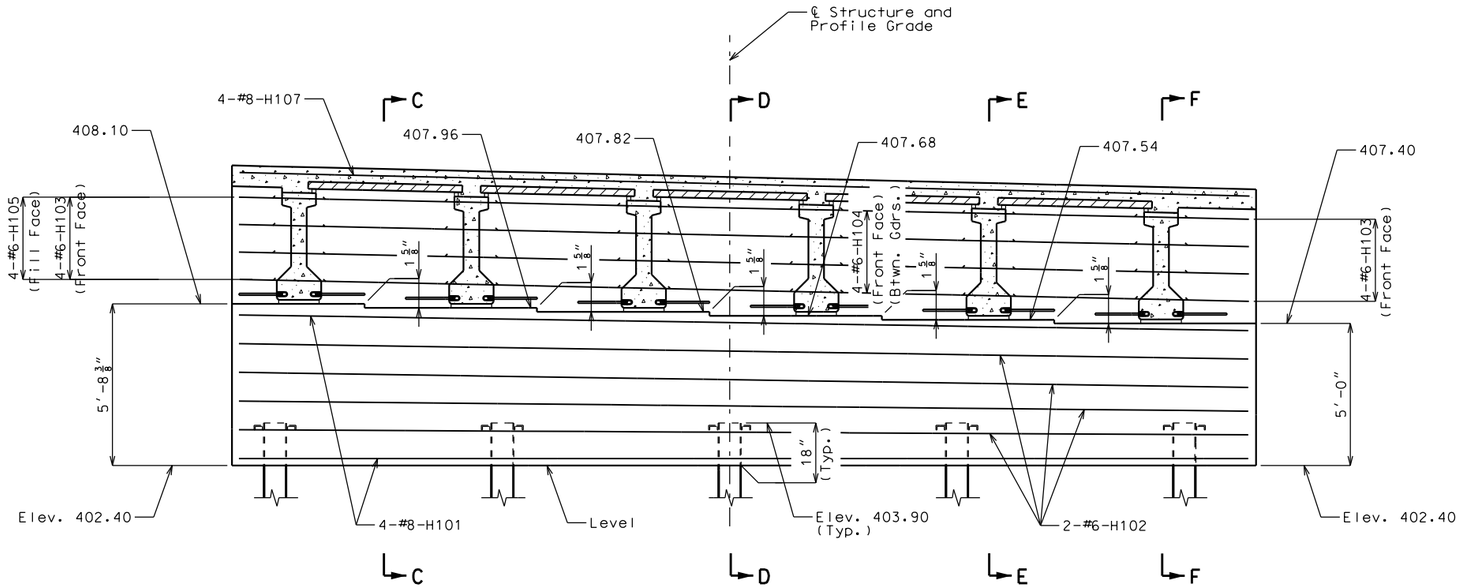

SECTION NEAR END BENT

(Looking Back Station)

Note: Construction joint key 6"x3" not shown.

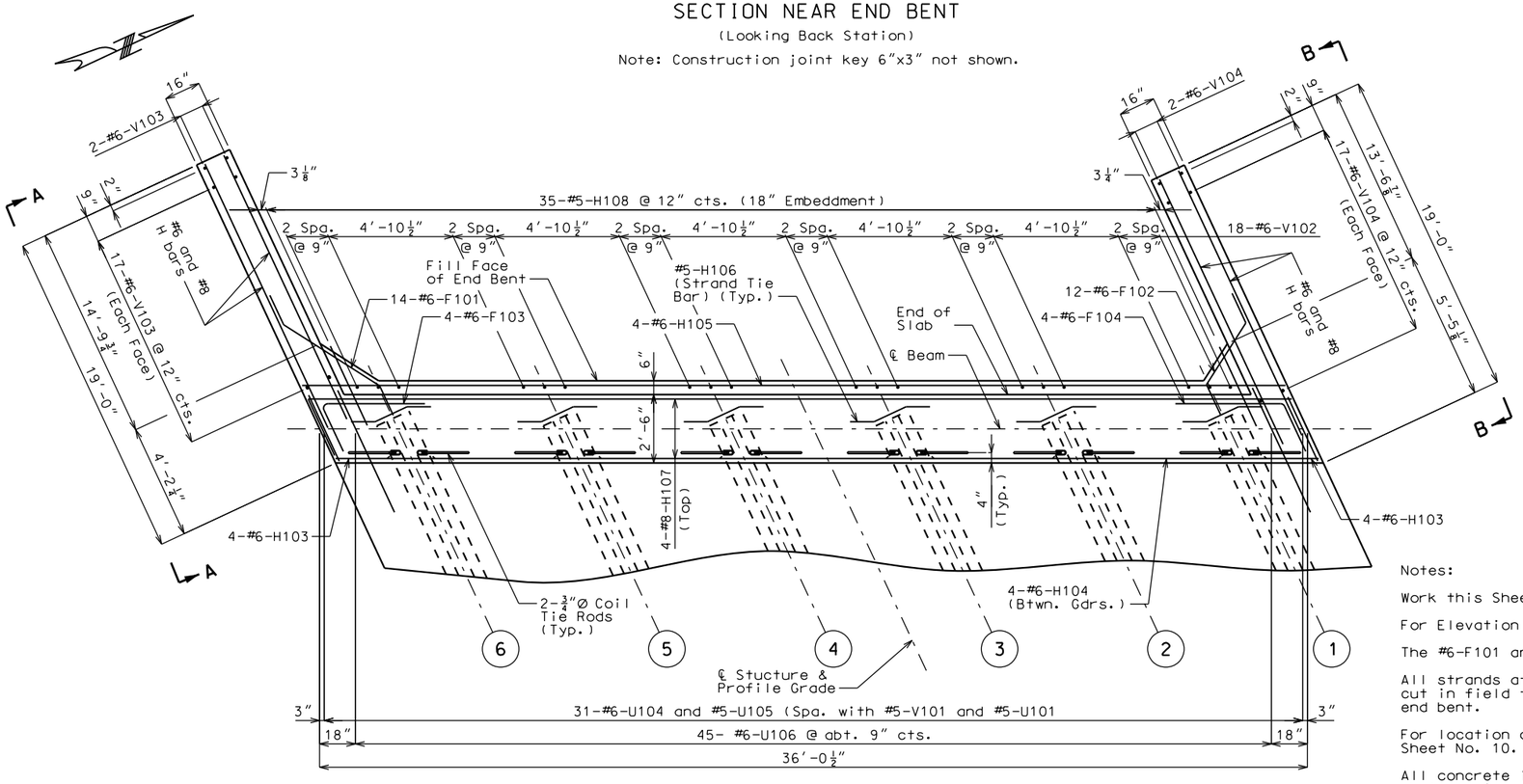

PART PLAN

Notes:

Work this Sheet with Sheets No. 3 and 5.

For Elevation A-A, B-B, Sections C-C, D-D, E-E and F-F see Sheet No. 5.

The #6-F101 and #6-F102 bars shall be bent in the field to clear girders.

All strands at end of girders shall be field bent or, if necessary, cut in field to maintain 1 1/2" minimum clearance to fill face of end bent.

For location of coil tie rods and #5-H106 (Strand Tie Bars), see Sheet No. 10.

All concrete in the end bent above top of beam and below top of slab shall be Class B-2.

DETAILS OF END BENT NO. 1

Detailed Sept. 2016
Checked Sept. 2016

Note: This drawing is not to scale. Follow dimensions.

STATE OF MISSOURI
STEPHEN L. SCHUPP
NUMBER E-24698
REGISTERED PROFESSIONAL ENGINEER

DATE PREPARED	2/3/2017
STATE	MO
SHEET NO.	19
ROUTE	BIG HOLLOW
COUNTY	JEFFERSON
JOB NO.	14-6048
PROJECT NO.	STP-9900 (646)
BRIDGE NO.	36900031

DESCRIPTION

DATE

IF A SEAL IS PRESENT ON THIS SHEET IT HAS BEEN ELECTRONICALLY SEALED AND DATED.

JEFFERSON COUNTY PUBLIC WORKS DEPARTMENT
P.O. BOX 100
HILLSBORO, MO 63050
(636-797-5340) PHONE
(636-797-5565) FAX

ABNA
4140 LINDELL BOULEVARD
ST. LOUIS, MO 63108
PH. 314-454-0222
CERTIFICATE/LICENSE NO. 001501

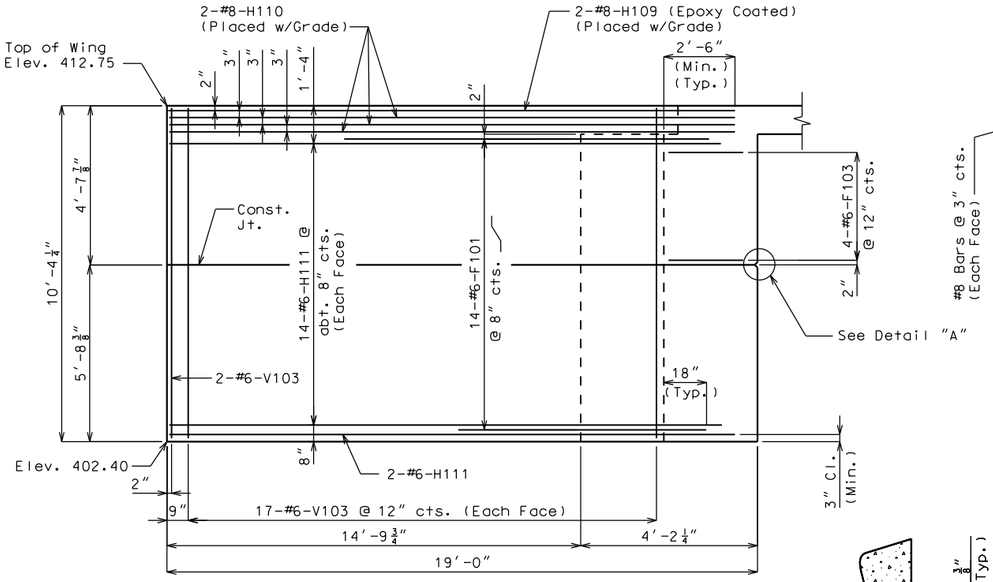

ELEVATION A-A

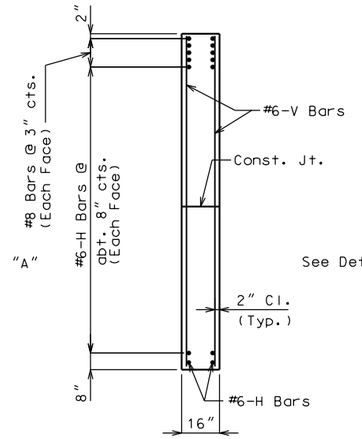

PART SECTION
THRU WING

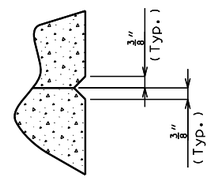

DETAIL "A"

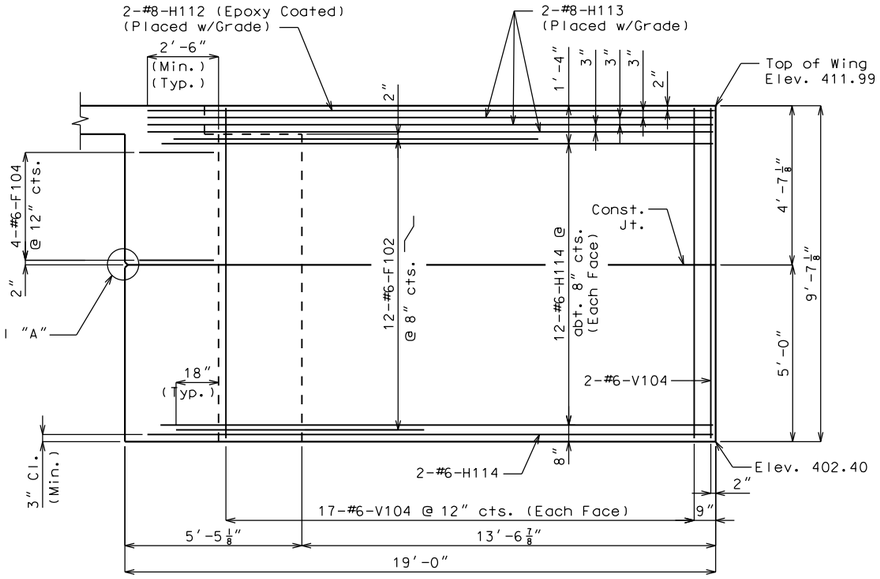

ELEVATION B-B

Notes:

Work this Sheet with Sheets No. 3 and 4.

For location of Elevations A-A, B-B and Sections C-C, D-D, E-E and F-F see Sheet No. 4.

Bend #6 F bars in field to clear girders.

All strands at end of girder shall be field bent or, if necessary, cut in field to maintain 1 1/2" minimum clearance to fill face of end bent.

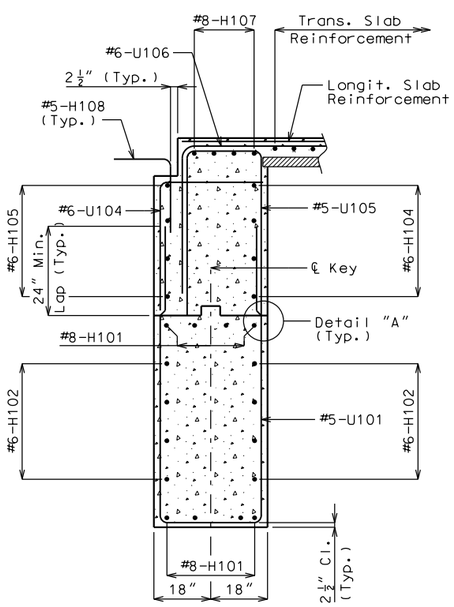

SECTION C-C

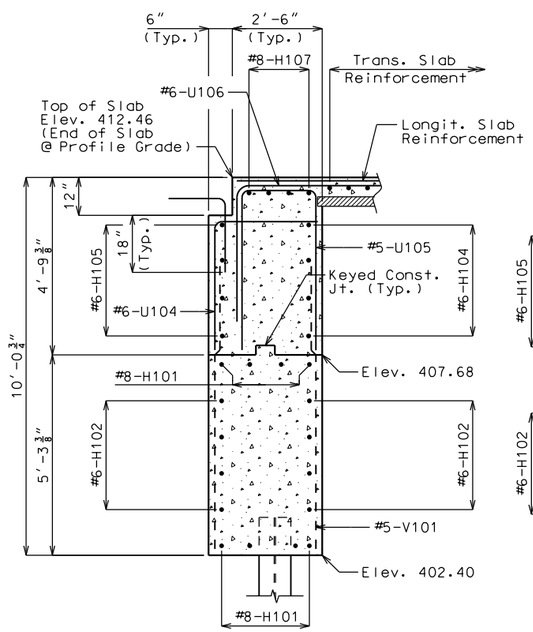

SECTION D-D

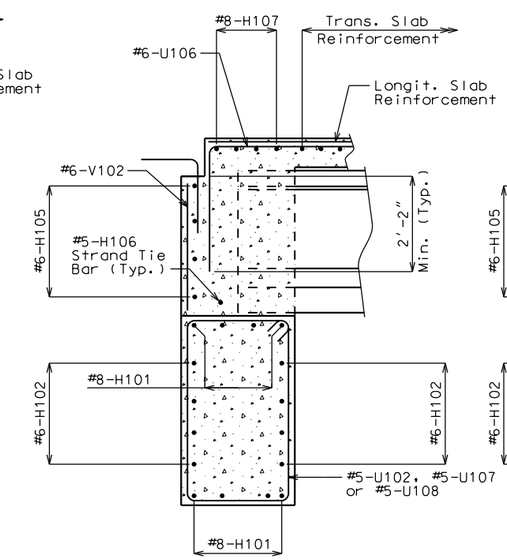

SECTION E-E

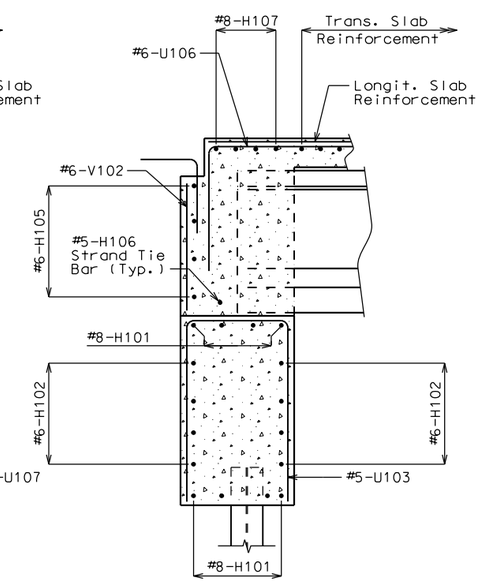

SECTION F-F

Detailed Sept. 2016
Checked Sept. 2016

Note: This drawing is not to scale. Follow dimensions.

Sheet No. 5 of 25

DETAILS OF END BENT NO. 1

STATE OF MISSOURI
STEPHEN K. SEIBERT
NUMBER E-24698
REGISTERED PROFESSIONAL ENGINEER

DATE PREPARED	
2/3/2017	
STATE	SHEET NO.
MO	20
ROUTE	
BIG HOLLOW	
COUNTY	
JEFFERSON	
JOB NO.	
14-6048	
PROJECT NO.	
STP-9900 (646)	
BRIDGE NO.	
36900031	

DATE	DESCRIPTION

IF A SEAL IS PRESENT ON THIS SHEET IT HAS BEEN ELECTRONICALLY SEALED AND DATED.

JEFFERSON COUNTY PUBLIC WORKS
DEPARTMENT
P.O. BOX 100
HILLSBORO, MO 63050
(636-797-5340) PHONE
(636-797-5565) FAX

ABNA
4140 LINDELL BOULEVARD
ST. LOUIS, MO 63108
PH. 314-454-0222
CERTIFICATE/LICENSE NO. 001501

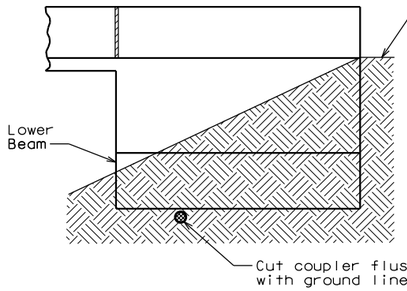

ELEVATION OF WING

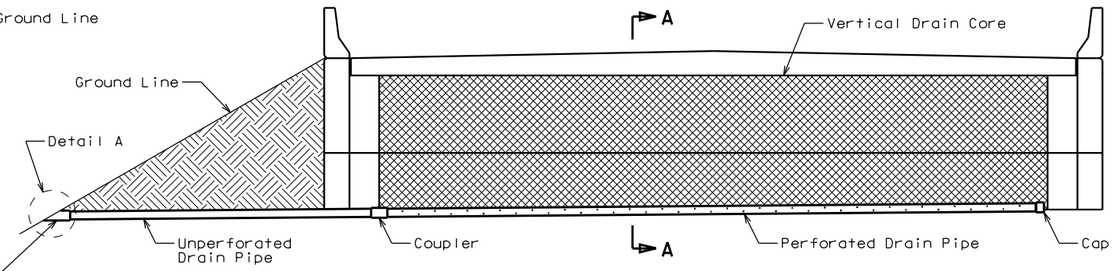

ELEVATION AT END BENT

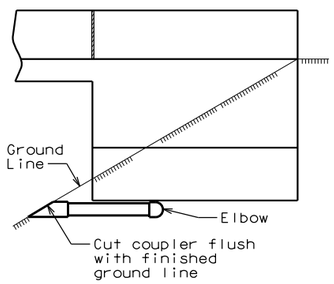

ELEVATION OF WING

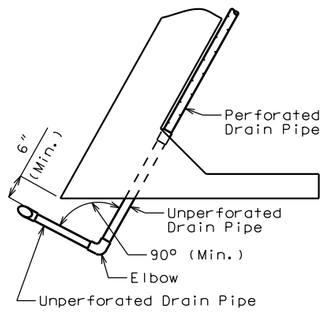

PART PLAN

OPTIONAL TURNED DRAIN

(Only if rock is encountered at outside of wing)

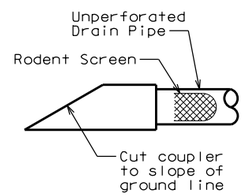

DETAIL A

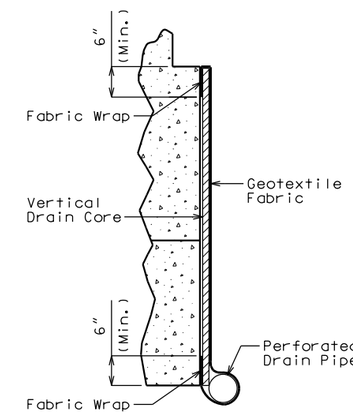

PART SECTION A-A

Note:

Drain pipe may be either 6-inch diameter corrugated metallic-coated steel pipe underdrain, 4-inch diameter corrugated polyvinyl chloride (PVC) drain pipe, or 4-inch diameter corrugated polyethylene (PE) drain pipe.

Place drain pipe at fill face of end bent and slope to lowest grade of ground line, also missing the lower beam of end bent by 1 1/2 inches. (See Elevation at End Bent.)

Perforated pipe shall be placed at fill face side at the bottom of end bent and plain pipe shall be used where the vertical drain ends to the exit at ground line.

VERTICAL DRAIN AT END BENTS

Detailed Sept. 2016
Checked Sept. 2016

Note: This drawing is not to scale. Follow dimensions.

STATE OF MISSOURI
STEPHEN K. SEEBA
NUMBER E-24698
REGISTERED PROFESSIONAL ENGINEER

DATE PREPARED	2/3/2017
STATE	MO
SHEET NO.	21
ROUTE	BIG HOLLOW
COUNTY	JEFFERSON
JOB NO.	14-6048
PROJECT NO.	STP-9900 (646)
BRIDGE NO.	36900031

DESCRIPTION

DATE

IF A SEAL IS PRESENT ON THIS SHEET IT HAS BEEN ELECTRONICALLY SEALED AND DATED.

JEFFERSON COUNTY PUBLIC WORKS DEPARTMENT
P.O. BOX 100
HILLSBORO, MO 63050
(636-797-5340) PHONE
(636-797-5565) FAX

ABNA
4140 LINDELL BOULEVARD
ST. LOUIS, MO 63108
PH. 314-454-0222
CERTIFICATE/LICENSE NO. 001501

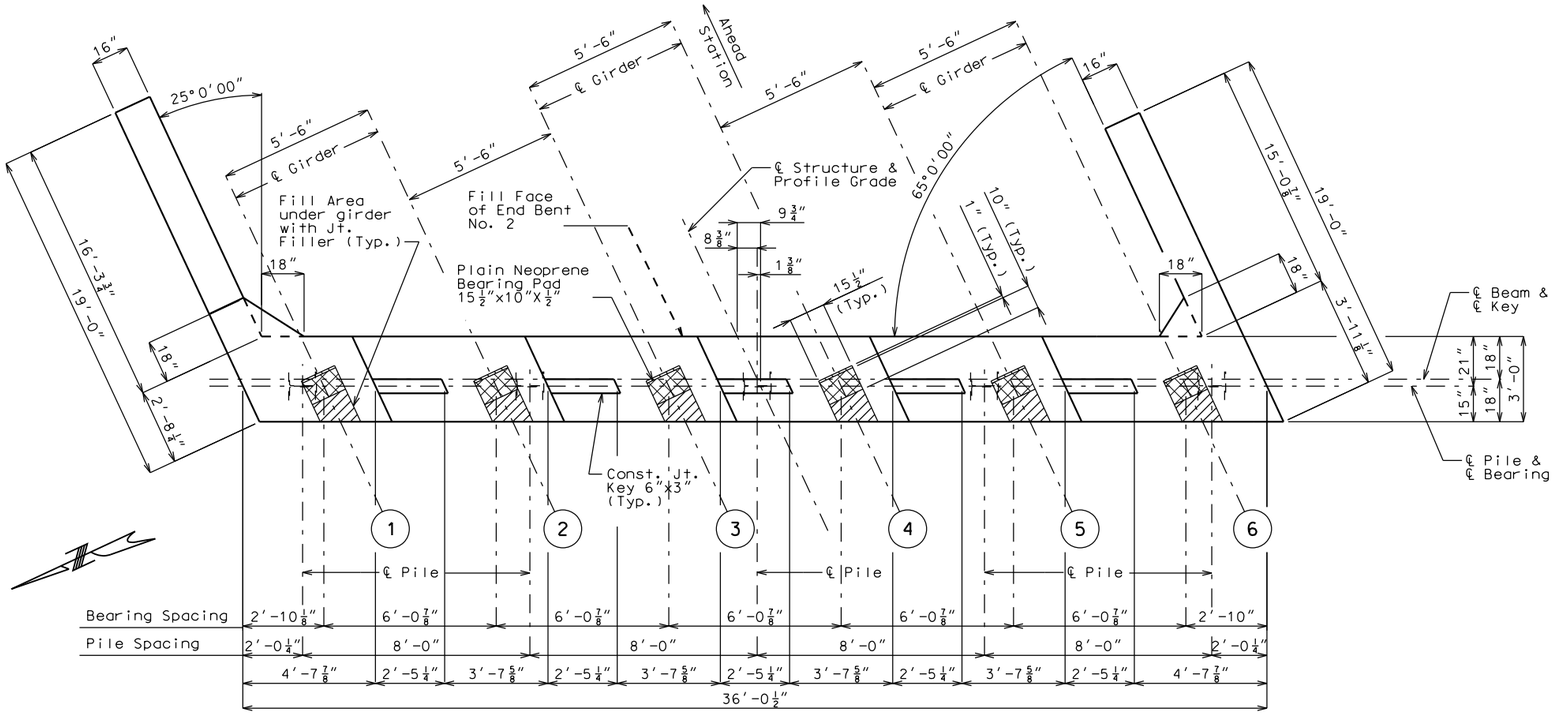

PLAN OF BEAM SHOWING DIMENSIONS

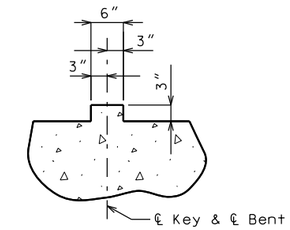

TYPICAL SECTION THRU KEY

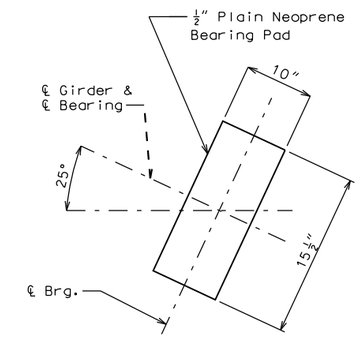

TYPICAL PLAN OF BEARINGS

6 Required

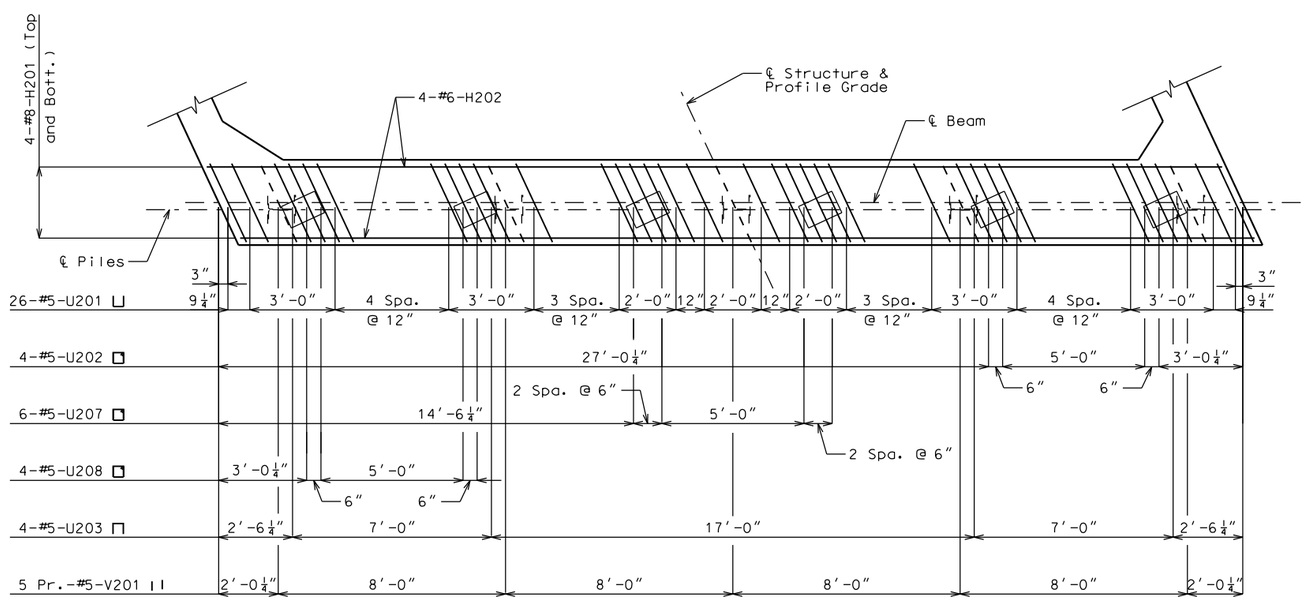

PLAN OF BEAM SHOWING REINFORCEMENT

Notes:

Work this Sheet with Sheets No. 8 and 9.

For details of Pile Anchors, see Sheet No. 2.

For details of Steel Pile Splice, see Sheet No. 2.

For details of Vertical Drain at End Bents, see Sheet No. 6.

All vertical reinforcing bars in the substructure beams or caps shall be field adjusted to clear piles by at least 1½".

All U-Bars and Pr. V-Bars in End Bent shall be placed parallel to ℄ Structure.

Substructure Quantity Table for End Bent No. 2		
Item		Quantity
Class 1 Excavation	cu. yard	97.8
Structural Steel Pile (10 in.)	linear foot	170
Class B Concrete (substructure)	cu. yard	30.1

Note: These quantities are included in the estimated quantities table on sheet no. 2.

DETAILS OF END BENT NO. 2

Detailed Sept. 2016
Checked Sept. 2016

Note: This drawing is not to scale. Follow dimensions.

STATE OF MISSOURI
STEPHEN K. SEGUIN
NUMBER E-24698
REGISTERED PROFESSIONAL ENGINEER

DATE PREPARED	
2/3/2017	
STATE	SHEET NO.
MO	22
ROUTE	
BIG HOLLOW	
COUNTY	
JEFFERSON	
JOB NO.	
14-6048	
PROJECT NO.	
STP-9900 (646)	
BRIDGE NO.	
36900031	

DATE	DESCRIPTION

IF A SEAL IS PRESENT ON THIS SHEET IT HAS BEEN ELECTRONICALLY SEALED AND DATED.

JEFFERSON COUNTY PUBLIC WORKS DEPARTMENT
P.O. BOX 100
HILLSBORO, MO 63050
(636-797-5340) PHONE
(636-797-5565) FAX

ABNA
4140 LINDELL BOULEVARD
ST. LOUIS, MO 63108
PH. 314-454-0222
CERTIFICATE/LICENSE NO. 001501

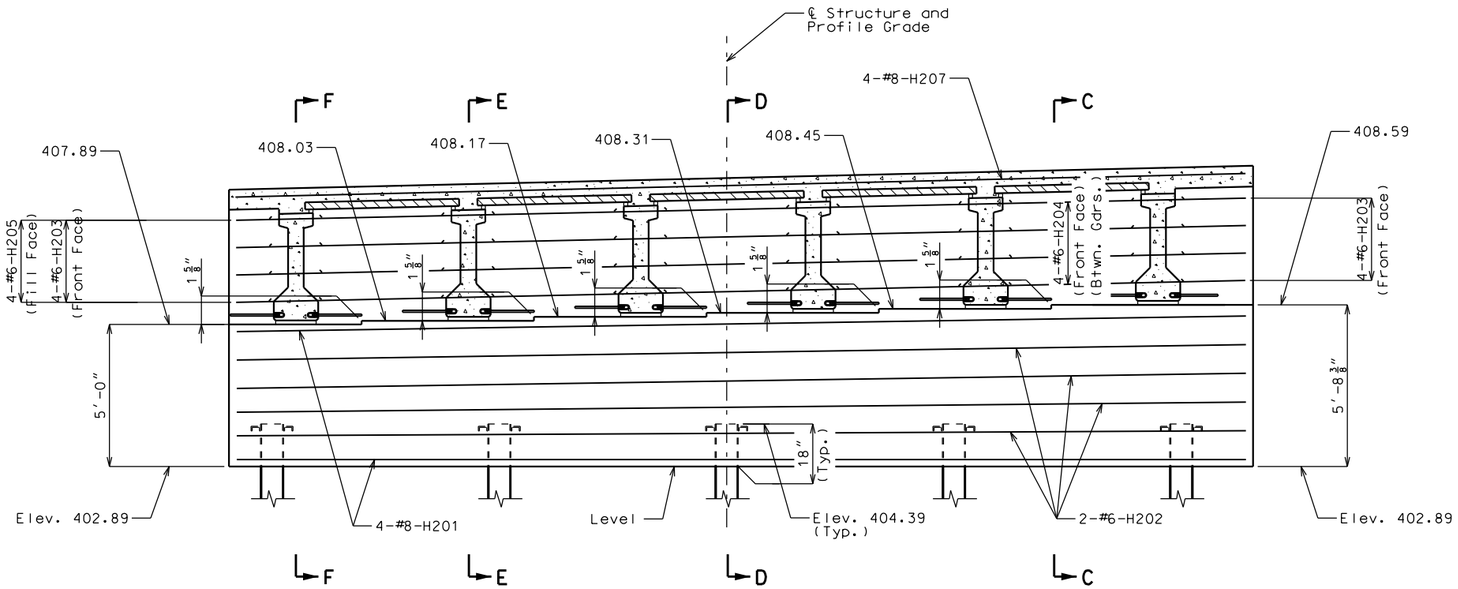

SECTION NEAR END BENT

(Looking Ahead Station)

Note: Construction joint key 6"x3" not shown.

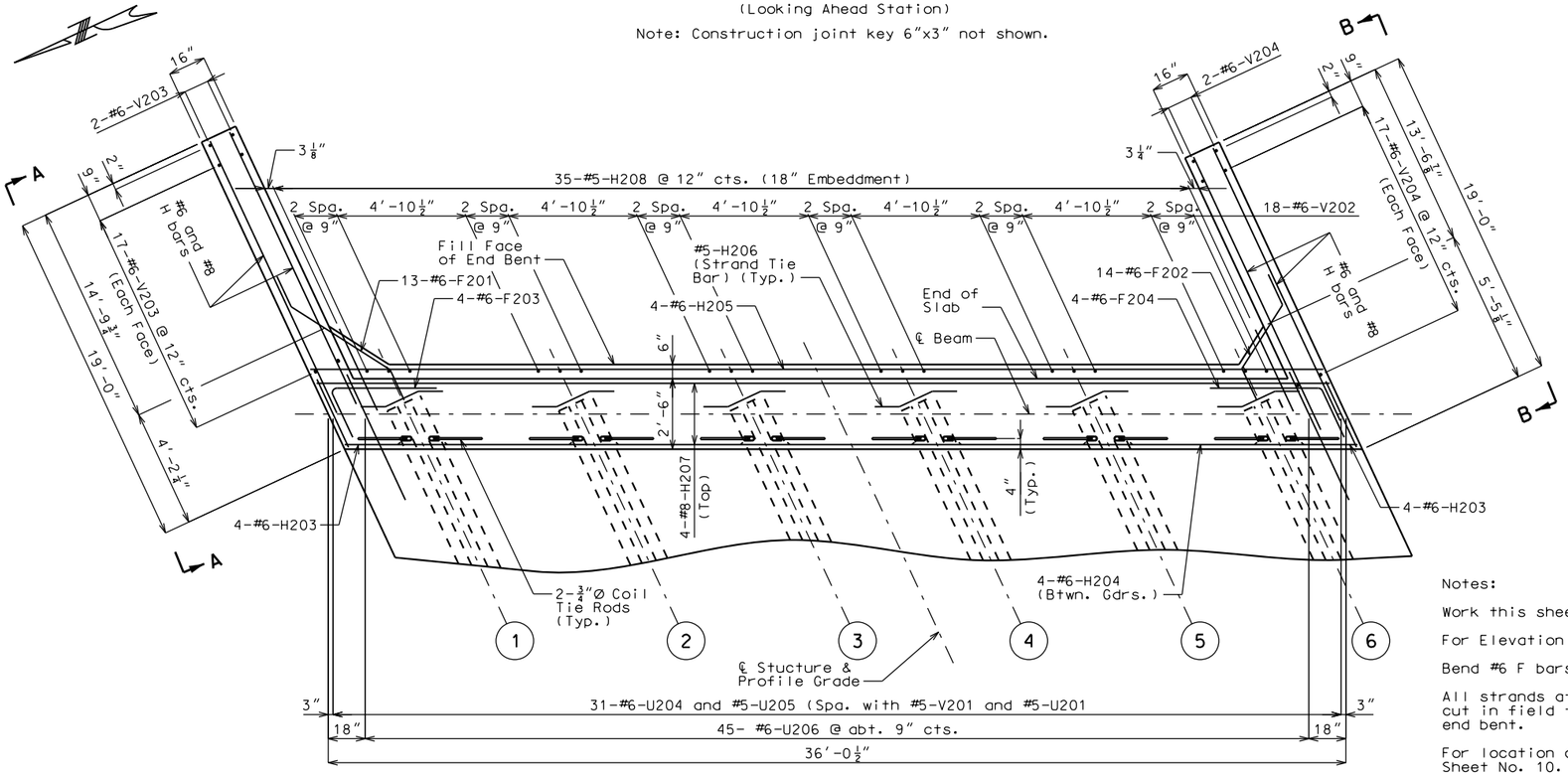

PART PLAN

Notes:

Work this sheet with Sheets No. 7 and 9.

For Elevation A-A, B-B, Sections C-C, D-D, E-E and F-F see Sheet No. 9.

Bend #6 F bars in field to clear girders.

All strands at end of girders shall be field bent or, if necessary, cut in field to maintain 1 1/2" minimum clearance to fill face of end bent.

For location of coil tie rods and #5-H206 (Strand Tie Bars), see Sheet No. 10.

All concrete in the end bent above top of beam and below top of slab shall be Class B-2.

DETAILS OF END BENT NO. 2

Detailed Sept. 2016
Checked Sept. 2016

Note: This drawing is not to scale. Follow dimensions.

STATE OF MISSOURI
STEPHEN L. SCHUPP
NUMBER E-24698
REGISTERED PROFESSIONAL ENGINEER

DATE PREPARED	2/3/2017
STATE	MO
SHEET NO.	23
ROUTE	BIG HOLLOW
COUNTY	JEFFERSON
JOB NO.	14-6048
PROJECT NO.	STP-9900 (646)
BRIDGE NO.	36900031

DESCRIPTION

DATE

IF A SEAL IS PRESENT ON THIS SHEET IT HAS BEEN ELECTRONICALLY SEALED AND DATED.

JEFFERSON COUNTY PUBLIC WORKS DEPARTMENT
P.O. BOX 100
HILLSBORO, MO 63050
(636-797-5340) PHONE
(636-797-5565) FAX

ABNA
4140 LINDELL BOULEVARD
ST. LOUIS, MO 63108
PH. 314-454-0222
CERTIFICATE/LICENSE NO. 001501

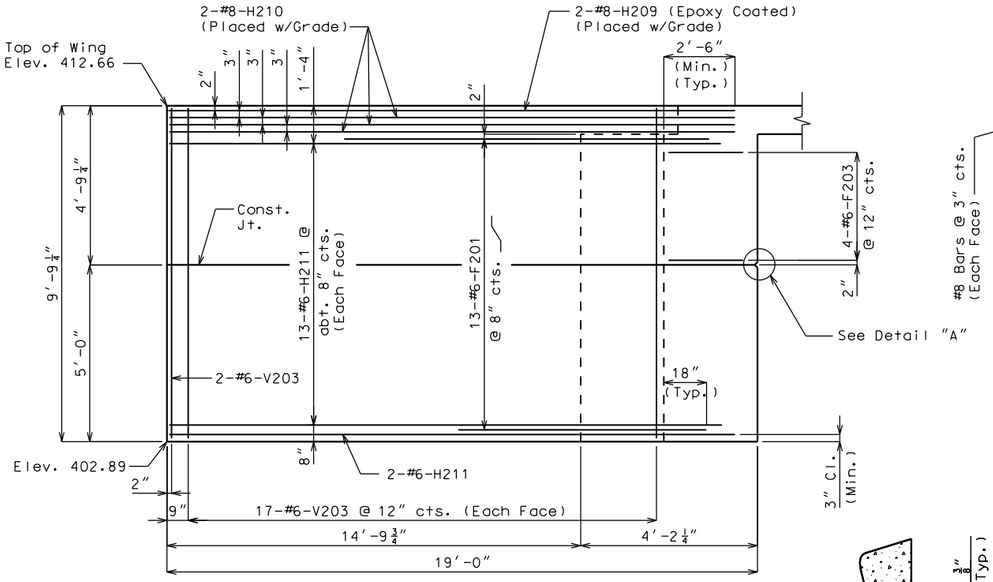

ELEVATION A-A

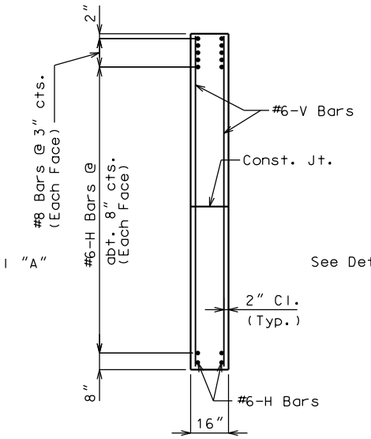

PART SECTION
THRU WING

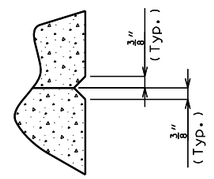

DETAIL "A"

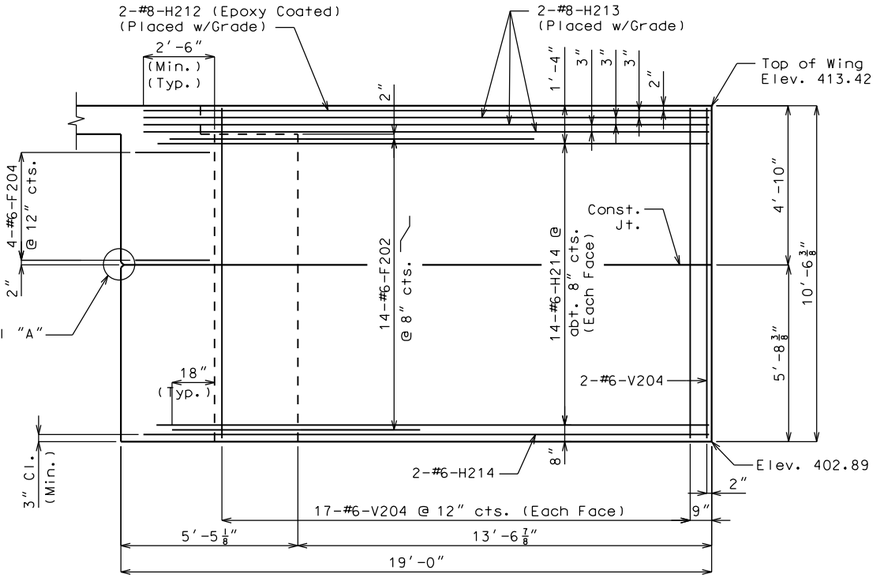

ELEVATION B-B

Notes:

Work this Sheet with Sheets No. 7 and 8.

For location of Elevations A-A, B-B and Sections C-C, D-D, E-E and F-F see Sheet No. 8.

Bend #6 F bars in field to clear girders.

All strands at end of girder shall be field bent or, if necessary, cut in field to maintain 1½" minimum clearance to fill face of end bent.

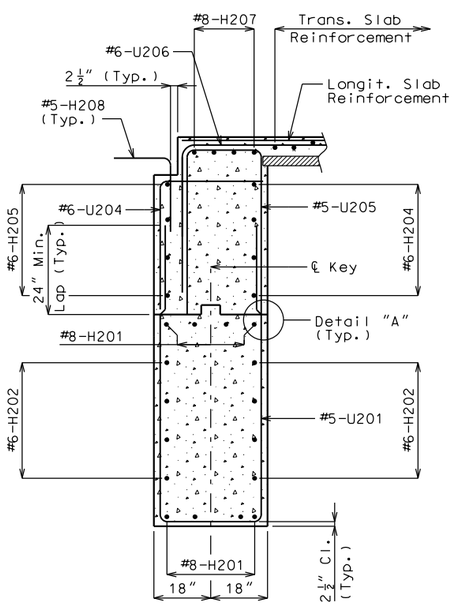

SECTION C-C

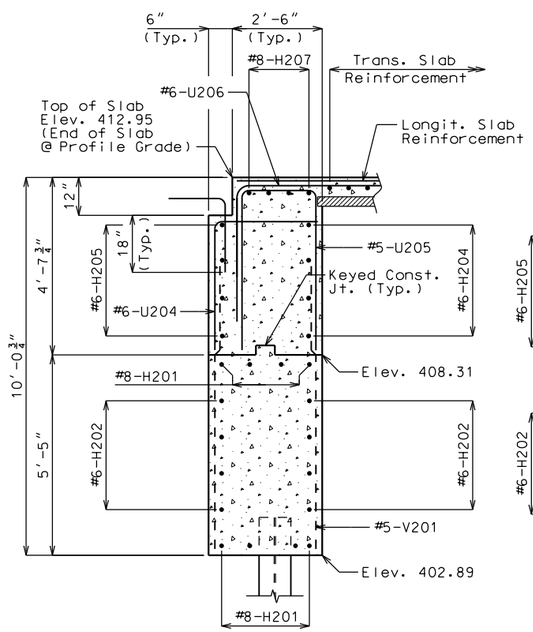

SECTION D-D

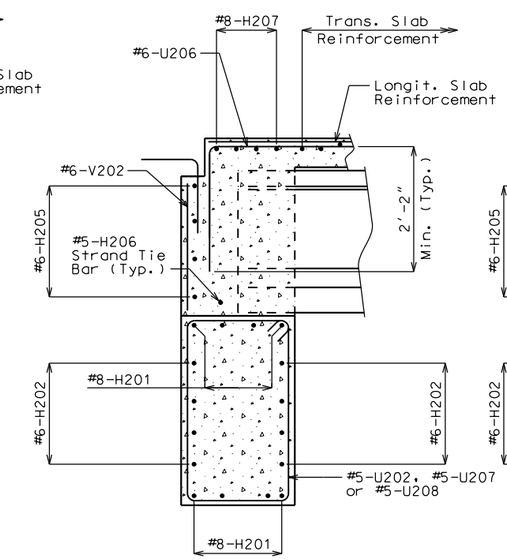

SECTION E-E

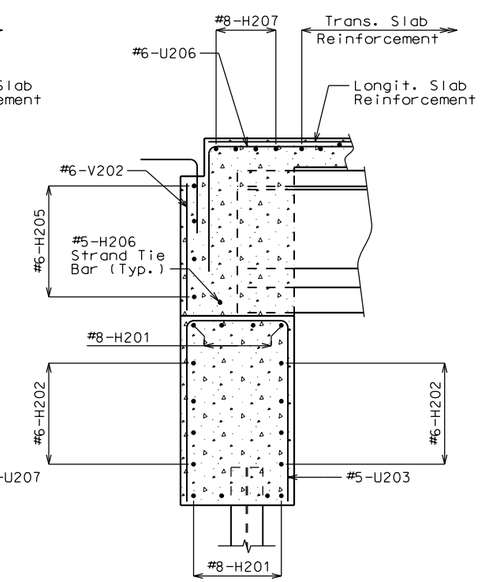

SECTION F-F

Detailed Sept. 2016
Checked Sept. 2016

Note: This drawing is not to scale. Follow dimensions.

Sheet No. 9 of 25

DETAILS OF END BENT NO. 2

STATE OF MISSOURI
STEPHEN K. SEEVERS
NUMBER E-24698
REGISTERED PROFESSIONAL ENGINEER

DATE PREPARED	
2/3/2017	
STATE	SHEET NO.
MO	24
ROUTE	
BIG HOLLOW	
COUNTY	
JEFFERSON	
JOB NO.	
14-6048	
PROJECT NO.	
STP-9900 (646)	
BRIDGE NO.	
36900031	

DESCRIPTION

DATE

IF A SEAL IS PRESENT ON THIS SHEET IT HAS BEEN ELECTRONICALLY SEALED AND DATED.

JEFFERSON COUNTY PUBLIC WORKS
DEPARTMENT
P.O. BOX 100
HILLSBORO, MO 63050
(636-797-5340) PHONE
(636-797-5565) FAX

ABNA
4140 LINDELL BOULEVARD
ST. LOUIS, MO 63108
PH. 314-454-0222
CERTIFICATE/LICENSE NO. 001501

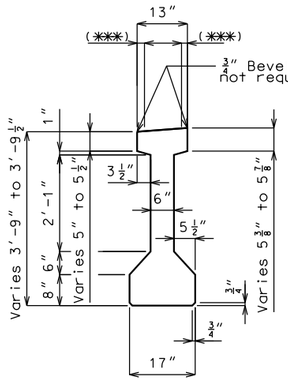

GIRDER DIMENSIONS

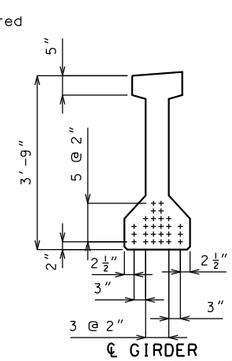

℄ GIRDER

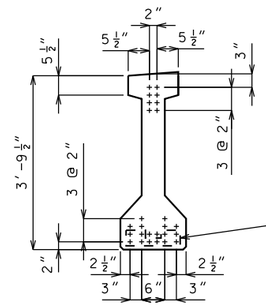

END OF GIRDER

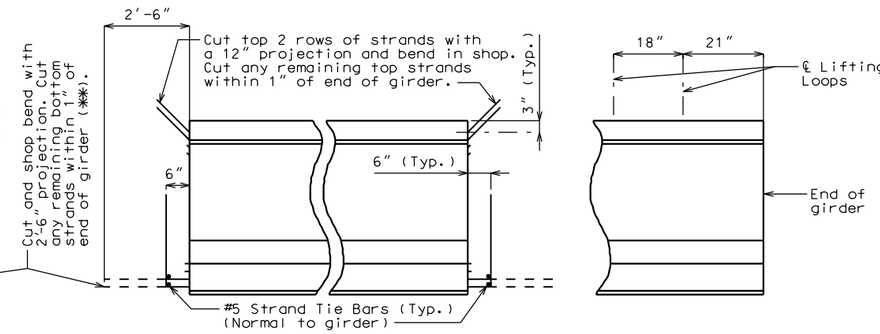

END BENT

INTERMEDIATE BENT

STRAND ARRANGEMENTS

STRAND DETAILS AT GIRDER ENDS

LOCATION OF LIFTING LOOPS

Concrete for prestressed girders shall be Class A-1 with f′c = 6000 psi and f′ci = 5000 psi.

(+) indicates prestressing strand.

Use 26 strands with an initial prestress force of 806 kips.

Prestressing tendons shall be uncoated, seven-wire, low-relaxation strands, 1/2 inch diameter in accordance with AASHTO M 203, Grade 270. Pretensioned members shall be in accordance with Sec 1029.

✱✱ At the contractor's option the location for bent-up strands may be varied from that shown. The total number of bent-up strands shall not be changed. One strand tie bar is required for each layer of bent-up strands except at end bents which require one bar on the bottom layer of strands only. No additional payment will be made if additional strand tie bars are required.

✱✱✱ At contractor's option a 1 1/2″ to 1 3/4″ smooth finish strip is permitted to facilitate placement of preformed fiber expansion joint material or expanded or extruded polystyrene bedding material for the prestressed panels.

BILL OF REINFORCING STEEL - EACH GIRDER				
NO.	SIZE & MARK	ACTUAL LENGTH	SHAPE	BENDING DIAGRAM
4	5 A1	41′-9″	20	
224	5 B1	5′-2″	11	
16	6 B2	4′-7″	11	
120	4 C1	13″	10	
240	4 D1	2′-7″	9	

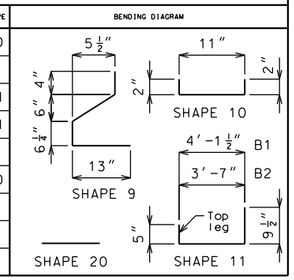

All dimensions are out to out.

Hooks and bends shall be in accordance with the CRSI Manual of Standard Practice for Detailing Reinforced Concrete Structures, Stirrup and Tie Dimensions.

Actual lengths are measured along centerline of bar to the nearest inch.

Minimum clearance to reinforcing shall be 1″.

All reinforcement shall be Grade 60.

The two D1 bars may be furnished as one bar at the fabricator's option.

All B1 bars shall be epoxy coated.

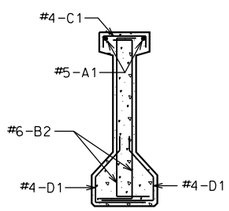

SECTION A-A

Strands not shown for clarity.

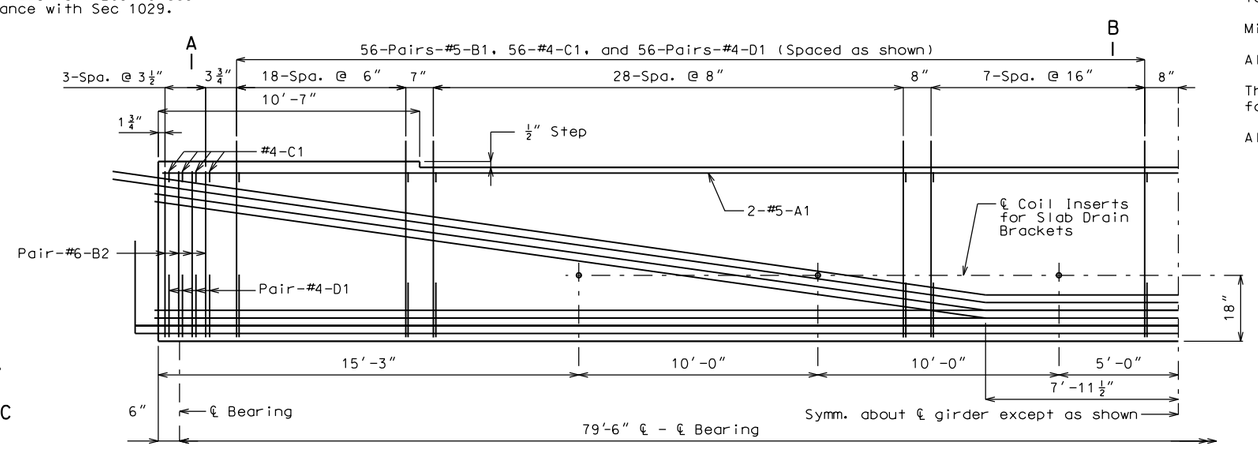

HALF ELEVATION OF GIRDER SPAN (1-2)

Exterior and interior girders are the same, except for coil ties and holes for steel intermediate diaphragms.

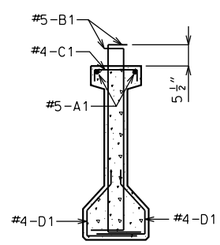

SECTION B-B

Strands not shown for clarity.

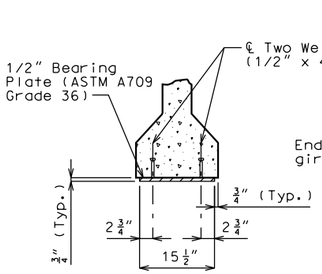

SECTION C-C

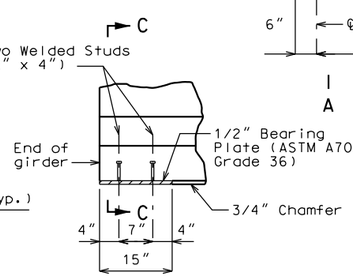

PART ELEVATION AT END OF GIRDER

BEARING PLATE DETAILS

Galvanize the 1/2″ bearing plate (ASTM A709 Grade 36) in accordance with ASTM A123.

Cost of furnishing, galvanizing, and installing the 1/2″ bearing plate (ASTM A709 Grade 36) and welded studs in the prestressed girder will be considered completely covered by the contract unit price for Prestressed Concrete I-Girder.

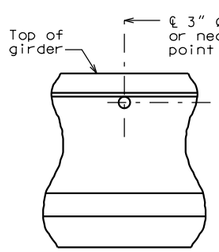

PART ELEVATION OF GIRDER

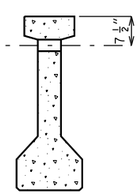

PART SECTION NEAR VENT HOLE

Place vent holes at or near upgrade 1/3 point of girders and clear reinforcing steel or strands by 1 1/2″ minimum and steel intermediate diaphragm bolt connections by 6″ minimum.

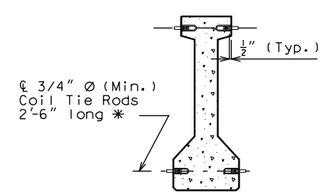

EXTERIOR GIRDERS AT END BENTS
INTERIOR GIRDERS AT ALL BENTS

DETAILS OF COIL TIES

Cost of 3/4″ Ø coil tie rods placed in diaphragms will be considered completely covered by the contract unit price for Prestressed Concrete I-Girder.

Coil ties shall be held in place in the forms by slotted wire-setting-studs projecting through forms. Studs are to be left in place or replaced with temporary plugs until girders are erected, then replaced by coil tie rods.

For location of coil inserts at slab drains, see Sheet No. 16.

For location of coil ties, see Sheets No. 4 & 8.

The 1 1/2″ Ø holes shall be cast in the web for steel intermediate diaphragms. Drilling is not allowed.

For details of diaphragms, see Sheet No. 11.

For Girder Camber Diagram, see Sheet No. 13.

✱ Length of coil tie rods at exterior girders at end bents = 1′-9″.

Detailed Sept. 2016
Checked Sept. 2016

Note: This drawing is not to scale. Follow dimensions.

STATE OF MISSOURI — STEPHEN L. SCHOW — NUMBER E-24698 — REGISTERED PROFESSIONAL ENGINEER

DATE PREPARED	
2/3/2017	
STATE	SHEET NO.
MO	25
ROUTE	
BIG HOLLOW	
COUNTY	
JEFFERSON	
JOB NO.	
14-6048	
PROJECT NO.	
STP-9900 (646)	
BRIDGE NO.	
36900031	

IF A SEAL IS PRESENT ON THIS SHEET IT HAS BEEN ELECTRONICALLY SEALED AND DATED.

DATE	DESCRIPTION

JEFFERSON COUNTY PUBLIC WORKS DEPARTMENT
P.O. BOX 100
HILLSBORO, MO 63050
(636-797-5340) PHONE
(636-797-5565) FAX

ABNA
4140 LINDELL BOULEVARD
ST. LOUIS, MO 63108
PH. 314-454-0222
CERTIFICATE/LICENSE NO. 001501

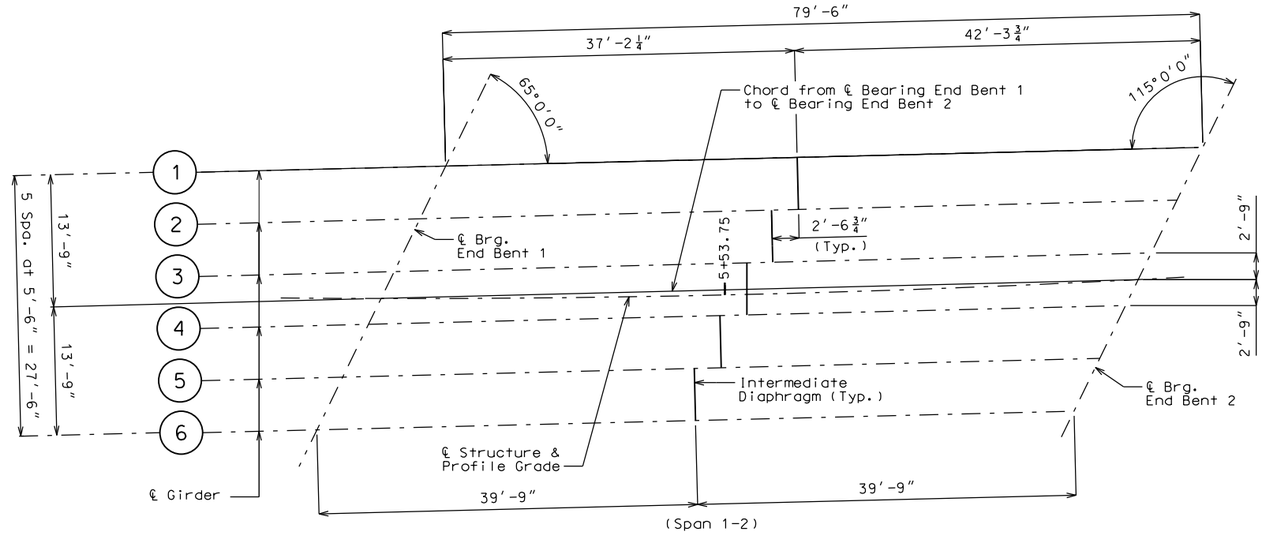

LOCATION OF INTERMEDIATE DIAPHRAGMS/FRAMING PLAN

Note: Longitudinal dimensions are measured horizontal.

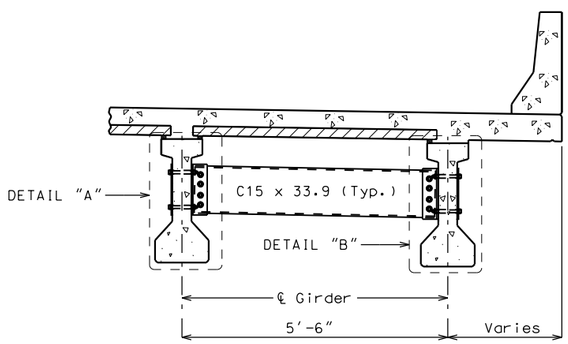

PART SECTION SHOWING INTERMEDIATE DIAPHRAGMS

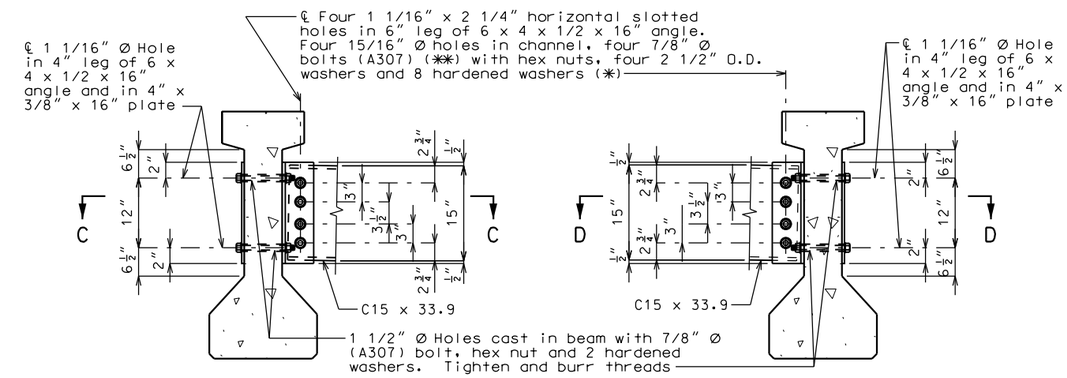

DETAIL "A" DETAIL "B"

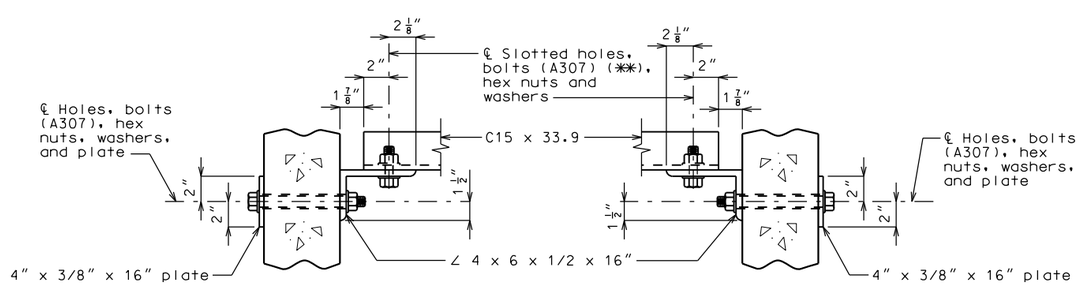

SECTION C-C SECTION D-D

STEEL DIAPHRAGM NOTES:

(✱) In lieu of 2 1/2" outside diameter washers, contractor may substitute a 3/16" (Min. thickness) plate with four 15/16" Ø holes and one hardened washer per bolt.

(✱✱) Bolts shall be tightened to provide a tension of one-half that specified in Sec 712 for high strength bolt installation. A325 bolts may be substituted for and installed in accordance with the requirements for the specified A307 bolts.

All diaphragm materials including bolts, nuts, and washers shall be galvanized.

Fabricated structural steel shall be ASTM A709 Grade 36 except as noted.

Payment for furnishing and installing steel intermediate diaphragms will be considered completely covered by the contract unit price for Steel Intermediate Diaphragm for P/S Concrete Girders.

Shop drawings will not be required for steel intermediate diaphragms and angle connections.

STEEL INTERMEDIATE DIAPHRAGM DETAILS

Detailed Sept. 2016
Checked Sept. 2016

Note: This drawing is not to scale. Follow dimensions.

STATE OF MISSOURI
STEPHEN K. SEIBERT
NUMBER E-24698
REGISTERED PROFESSIONAL ENGINEER

DATE PREPARED	
2/3/2017	
STATE MO	SHEET NO. 26
ROUTE BIG HOLLOW	
COUNTY JEFFERSON	
JOB NO. 14-6048	
PROJECT NO. STP-9900 (646)	
BRIDGE NO. 36900031	

DESCRIPTION	DATE

IF A SEAL IS PRESENT ON THIS SHEET IT HAS BEEN ELECTRONICALLY SEALED AND DATED.

JEFFERSON COUNTY PUBLIC WORKS DEPARTMENT
P.O. BOX 100
HILLSBORO, MO 63050
(636-797-5340) PHONE
(636-797-5565) FAX

ABNA
4140 LINDELL BOULEVARD
ST. LOUIS, MO 63108
PH. 314-454-0222
CERTIFICATE/LICENSE NO. 001501

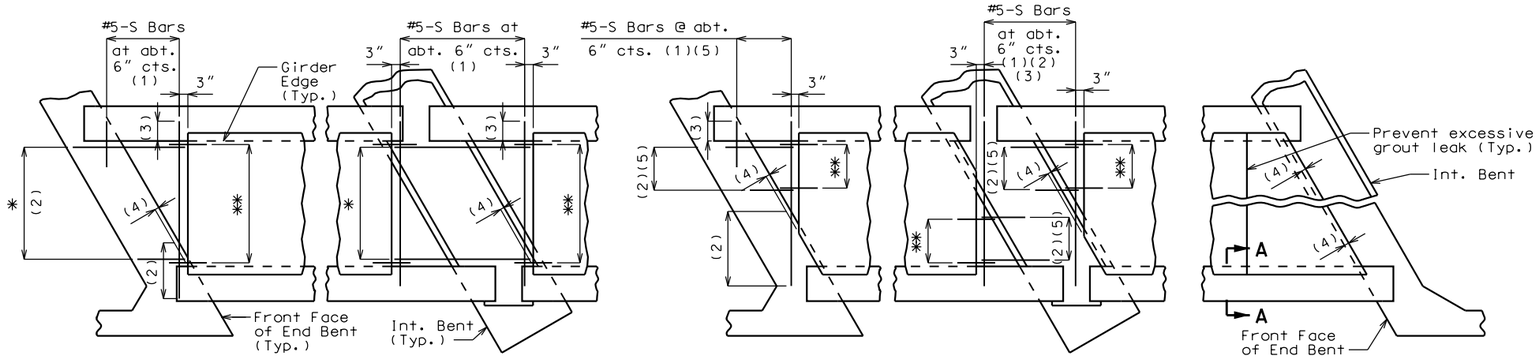

SQUARED END PANELS OR TRUNCATED END PANELS

SKEWED END PANELS

PLAN SHOWING PANELS PLACEMENT

* #5-S Bars at abt. ± 9" cts. (1)
** #3-P1 at 12" cts. (End panels only)

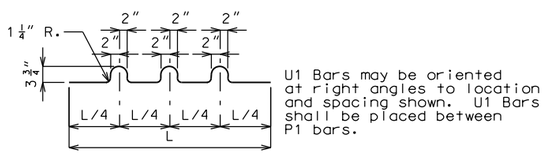

U1 Bars may be oriented at right angles to location and spacing shown. U1 Bars shall be placed between P1 bars.

BENDING DIAGRAM FOR U1 BAR

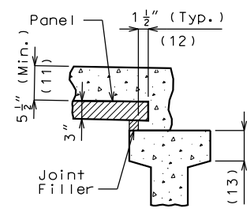

SECTION A-A

Joint Filler Dimensions		
Width	Height	
	Min.	Max.
1 1/2"	1"	2"

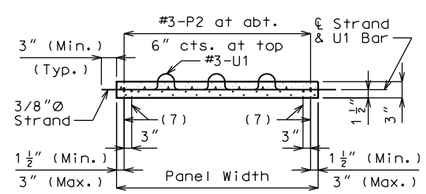

SECTION B-B

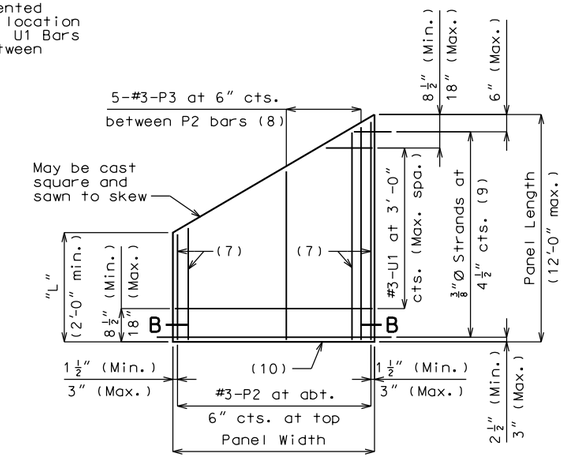

PLAN OF OPTIONAL SKEWED END PANEL

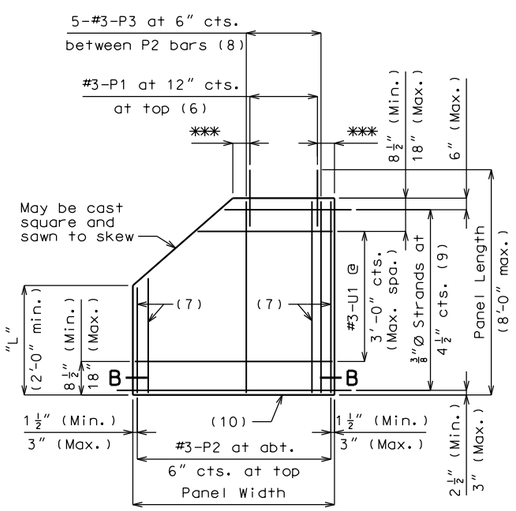

PLAN OF OPTIONAL TRUNCATED END PANEL

*** 3" (Min.), 6" (Max.)

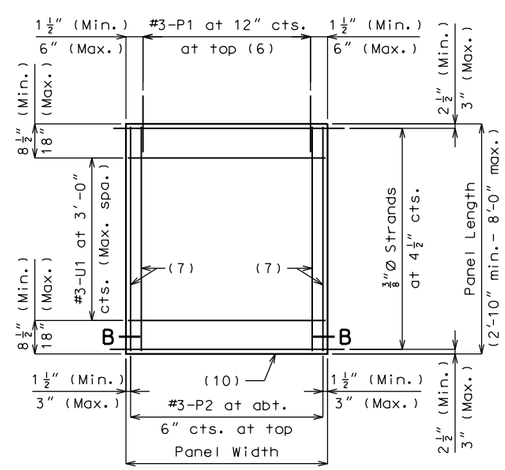

PLAN OF SQUARED PANEL

Reference Notes:

Plan of Panels Placement:

(1) S-bars shown are bottom steel in slab between panels and used with squared and truncated end panels only.

(2) Extend S-bars 18 inches beyond the front face of end bents and int. bents for squared and truncated end panels only.

(3) Extend S-bars 9 inches beyond edge of girder (Typ.).

(4) End panels shall be dimensioned 1/2" min. to 1 1/2" max. from the inside face of diaphragm.

(5) For truncated end panels, use a min. of #5-S bars at 6" crossings in openings, or min. 4x4-W7xW7.

Plans of Panels:

(6) For end panels only, P1 bars shall be 2'-0" in length and embedded 12". P1 bars will not be required for panels at squared integral end bents.

(7) #3-P2 bars near edge of panel at bottom (under strands).

(8) Use #3-P3 bars if panel is skewed 45° or greater.

(9) Any strand 2'-0" or shorter shall have a #4 reinforcing bar on each side of it, centered between strands. Strands 2'-0" or shorter may then be debonded at the fabricator's option.

(10) Optional 1/2" x 45° Chamfer one or both sides at bottom.

Section A-A:

(11) Slab thickness over prestressed panels varies due to girder camber. In order to maintain minimum slab thickness, it may be necessary to raise the grade uniformly throughout the structure. No payment will be made for additional labor or materials required for necessary grade adjustment.

(12) Contractor shall ensure proper consolidation under and between panels.

(13) At the contractor's option, the variation in slab thickness over prestressed panels may be eliminated or reduced by increasing and varying the girder top flange thickness. Dimensions shall be shown on the shop drawings.

DETAILS OF PRESTRESSED PANELS

General Notes:

Prestressed Panels:

Concrete for prestressed panels shall be Class A-1 with f'c = 6,000 psi, f'ci = 4,000 psi.

The top surface of all panels shall receive a scored finish with a depth of scoring of 1/8" perpendicular to the prestressing strands in the panels.

Prestressing tendons shall be high-tensile strength, uncoated, seven-wire, low-relaxation strands for prestressed concrete in accordance with AASHTO M 203 Grade 270, with nominal diameter of strand = 3/8" and nominal area = 0.085 sq.in. and minimum ultimate strength = 22.95 kips (270 ksi). Larger strands may be used with the same spacing and initial tension.

Initial prestressing force = 17.2 kips/strand.

The method and sequence of releasing the strands shall be shown on the shop drawings.

Suitable anchorage devices for lifting panels may be cast in panels, provided the devices are shown on the shop drawings and approved by the engineer. Panel lengths shall be determined by the contractor and shown on the shop drawings.

When squared end panels are used at skewed bents, the skewed portion shall be cast full depth. No separate payment will be made for additional concrete and reinforcing required.

Support from diaphragm forms is required under the optional skewed end until cast-in-place concrete has reached 3,000 psi compressive strength.

Prestressed panels shall be brought to saturated surface-dry (SSD) condition just prior to the deck pour. There shall be no free standing water on the panels or in the area to be cast.

The prestressed panel quantities are not included in the table of estimated quantities for the slab.

Reinforcing Steel:

All dimensions are out to out.

Hooks and bends shall be in accordance with the CRSI Manual of Standard Practice for Detailing Reinforced Concrete Structures, Stirrup and Tie Dimensions.

Minimum clearance to reinforcing steel shall be 1 1/2", unless otherwise shown.

If U1 bars interfere with placement of slab steel, U1 loops may be bent over, as necessary, to clear slab steel.

Welded wire reinforcement providing a minimum area of reinforcing perpendicular to strands of 0.22 sq. in./ft., with spacing parallel to strands sufficient to ensure proper handling, may be used in lieu of the #3-P2 bars shown. Wire or bar diameter shall not be larger than 0.375 inch. The above alternative reinforcement criteria may be used in lieu of the #3-P3 bars, when required, and placed over a width not less than 2 feet.

The reinforcing steel shall be tied securely to the 3/8"Ø strands with the following maximum spacing in each direction:
#3-P2 bars at 16 inches.
Welded wire reinforcement at 2'-0".

Tie the #3-U1 bars to the #3-P2 bars, or to the welded wire reinforcement, or to the strands at about 3'-0" centers.

Minimum reinforcement steel length shall be 2'-0".

All reinforcement other than prestressing strands shall be epoxy coated.

Precast panels may be in contact with stirrup reinforcing in diaphragms.

S-bars are not listed in the bill of reinforcing.

Cost of S-bars will be considered completely covered by the contract unit price for the slab.

Joint Filler:

Joint filler shall be preformed fiber expansion joint material in accordance with Sec 1057 or expanded or extruded polystyrene bedding material in accordance with Sec 1073.

Use Slab Haunching Diagram on Sheet No. 13 for determining thickness of joint filler within the limits noted in the table of Joint Filler Dimensions.

Thicker material may be used on one or both sides of the girder to reduce cast-in-place concrete thickness to within tolerances.

The same thickness of preformed fiber expansion joint material shall be used under any one edge of any panel except at locations where top flange thickness may be stepped. The maximum change in thickness between adjacent panels shall be 1/4 inch. The polystyrene bedding material may be cut with a transition to match haunch height above top of flange.

Joint filler shall be glued to the girder. When thickness exceeds 1 1/2 inches, the joint filler shall be glued top and bottom. The glue used shall be the type recommended by the joint filler manufacturer.

Edges of panels shall be uniformly seated on the joint filler before slab reinforcement is placed.

STATE OF MISSOURI — STERLING K. SCHOW — NUMBER E-24698 — REGISTERED PROFESSIONAL ENGINEER

DATE PREPARED	
2/3/2017	
STATE	SHEET NO.
MO	27
ROUTE	
BIG HOLLOW	
COUNTY	
JEFFERSON	
JOB NO.	
14-6048	
PROJECT NO.	
STP-9900 (646)	
BRIDGE NO.	
36900031	

DATE	DESCRIPTION

IF A SEAL IS PRESENT ON THIS SHEET IT HAS BEEN ELECTRONICALLY SEALED AND DATED.

JEFFERSON COUNTY PUBLIC WORKS DEPARTMENT
P.O. BOX 100
HILLSBORO, MO 63050
(636-797-5340) PHONE
(636-797-5565) FAX

ABNA
4140 LINDELL BOULEVARD
ST. LOUIS, MO 63108
PH. 314-454-0222
CERTIFICATE/LICENSE NO. 001501

Detailed Sept. 2016
Checked Sept. 2016

Note: This drawing is not to scale. Follow dimensions.

J:\2014\6048\Cadd\Bridge\B_36900031_012_PPP.dgn 2:10:13 PM 2/3/2017

Theoretical Bottom of Slab Elevations at ℄ Girder (Prior to Forming for Slab)✱✱

	Span (1-2)										
	℄ Brg	0.10	0.20	0.30	0.40	0.50	0.60	0.70	0.80	0.90	℄ Brg
Girder No. 1	411.41	411.49	411.57	411.64	411.71	411.76	411.81	411.84	411.87	411.88	411.90
Girder No. 2	411.54	411.63	411.70	411.78	411.84	411.89	411.94	411.97	412.00	412.02	412.04
Girder No. 3	411.68	411.76	411.84	411.91	411.98	412.03	412.08	412.11	412.14	412.16	412.18
Girder No. 4	411.82	411.90	411.98	412.05	412.12	412.17	412.21	412.25	412.28	412.30	412.31
Girder No. 5	411.96	412.04	412.12	412.19	412.25	412.31	412.35	412.39	412.41	412.43	412.45
Girder No. 6	412.10	412.18	412.26	412.33	412.40	412.45	412.50	412.53	412.56	412.57	412.59

(✱✱) Elevations are based on constant slab thickness of $8\frac{1}{2}''$ and include allowance for theoretical dead load deflections due to weight of slab (including prestressed panel) and rail.

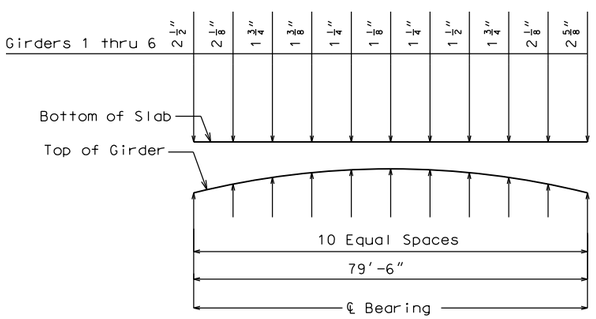

SPAN (1-2)

THEORETICAL SLAB HAUNCHING DIAGRAM

Concrete in the slab haunches is included in the Estimated Quantities for Slab on Concrete I-Girders.

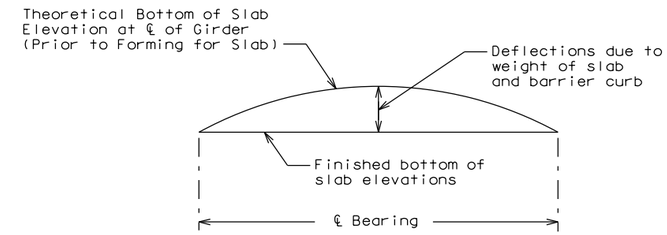

TYPICAL SLAB ELEVATIONS DIAGRAM

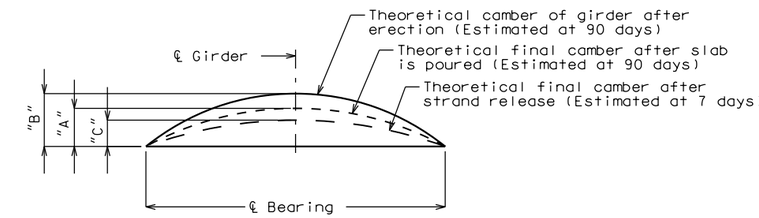

GIRDER CAMBER DIAGRAM

	Span (1-2)		
	"A"	"B"	"C"
Ext. Girder	$1\frac{3}{8}''$	$2\frac{5}{8}''$	$1\frac{1}{2}''$
Int. Girder	$1\frac{3}{8}''$		

If girder camber is different from that shown in the camber diagram, adjustment of the slab haunches, an increase in slab thickness or a raise in grade uniformly throughout the structure shall be necessary. No payment will be made for additional labor or materials required for variation in haunching, slab thickness or grade adjustment.

Concrete in the slab haunches is included in the Estimated Quantities for Slab on Concrete I-Girders.

Conversion factors for girder camber
0.1 pt. = 0.314 x 0.5 pt.
0.2 pt. = 0.593 x 0.5 pt.
0.3 pt. = 0.813 x 0.5 pt.
0.4 pt. = 0.952 x 0.5 pt.

0.25 pt. = 0.7125 x 0.5 pt.

STATE OF MISSOURI
STEPHEN K. SCHUTZ
NUMBER E-24698
REGISTERED PROFESSIONAL ENGINEER

DATE PREPARED	
2/3/2017	
STATE	SHEET NO.
MO	28

ROUTE: BIG HOLLOW
COUNTY: JEFFERSON
JOB NO.: 14-6048
PROJECT NO.: STP-9900 (646)
BRIDGE NO.: 36900031

DATE	DESCRIPTION

IF A SEAL IS PRESENT ON THIS SHEET IT HAS BEEN ELECTRONICALLY SEALED AND DATED.

JEFFERSON COUNTY PUBLIC WORKS DEPARTMENT
P.O. BOX 100
HILLSBORO, MO 63050
(636-797-5340) PHONE
(636-797-5565) FAX

ABNA
4140 LINDELL BOULEVARD
ST. LOUIS, MO 63108
PH. 314-454-0222
CERTIFICATE/LICENSE NO. 001501

Detailed Sept. 2016
Checked Sept. 2016

Note: This drawing is not to scale. Follow dimensions.

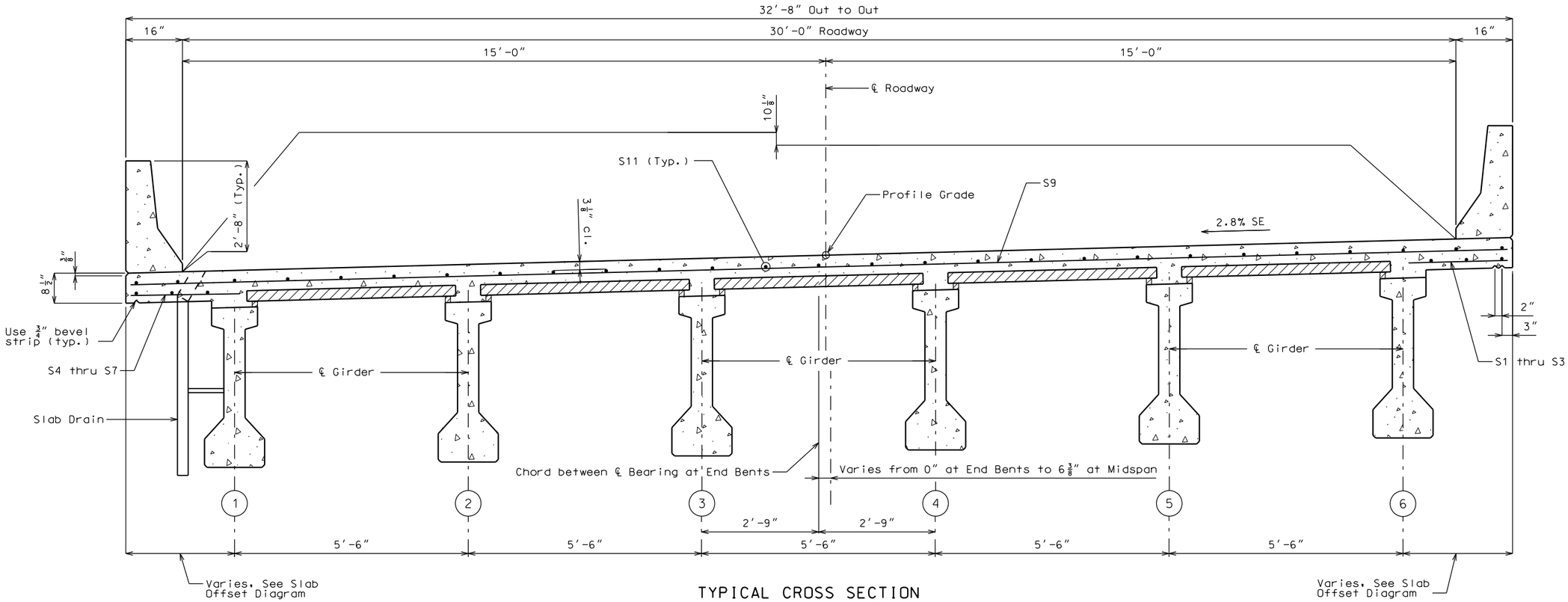

TYPICAL CROSS SECTION

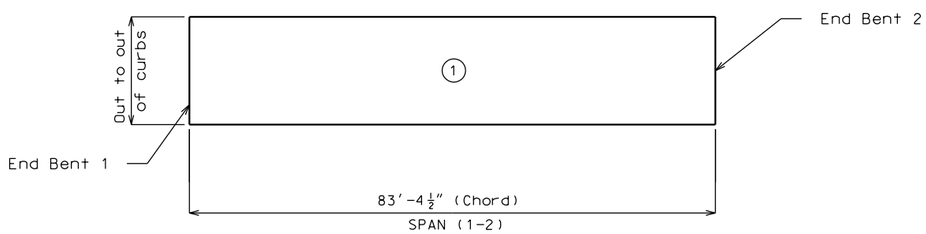

	Sequence of Pours		Min. rate of pour cu. yds./hr.
	Direction		With retarder
Basic sequence	1	2	25

Note: The contractor shall furnish an approved retarder to retard the set of the concrete to 2.5 hours, and shall pour and satisfactorily finish the slab pours at the rate given.

The concrete diaphragm at the intermediate bents and integral end bents shall be poured a minimum of 30 minutes and a maximum of 2 hours before the slab is poured.

SLAB POURING SEQUENCE

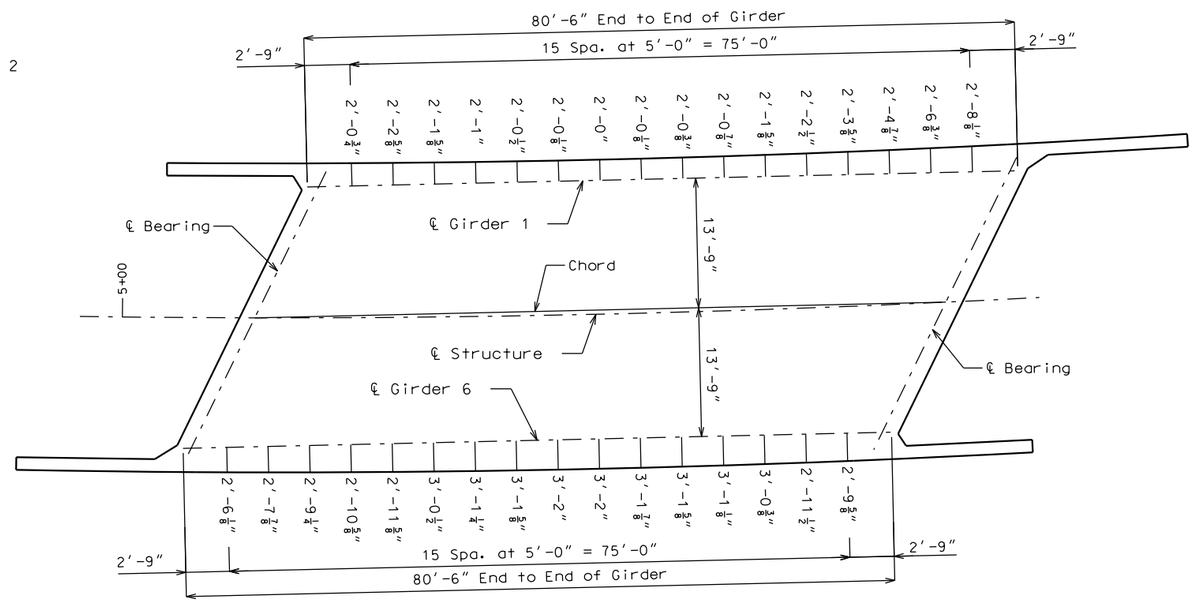

SLAB OFFSET DIAGRAM

Note: Contractor shall submit falsework plans and supporting design calculations for variable overhang per MoDOT Standard Specification Section 703.3.1. Price shall be considered incidental to Slab on Concrete I-Girder.

Detailed Sept. 2016
Checked Sept. 2016

Note: This drawing is not to scale. Follow dimensions.

STATE OF MISSOURI
STEPHEN L. SCHUTZ
NUMBER E-24698
REGISTERED PROFESSIONAL ENGINEER

DATE PREPARED	
2/3/2017	
STATE	SHEET NO.
MO	29
ROUTE	
BIG HOLLOW	
COUNTY	
JEFFERSON	
JOB NO.	
14-6048	
PROJECT NO.	
STP-9900 (646)	
BRIDGE NO.	
36900031	

DATE	DESCRIPTION

IF A SEAL IS PRESENT ON THIS SHEET IT HAS BEEN ELECTRONICALLY SEALED AND DATED.

JEFFERSON COUNTY PUBLIC WORKS
DEPARTMENT
P.O. BOX 100
HILLSBORO, MO 63050
(636-797-5340) PHONE
(636-797-5565) FAX

ABNA
4140 LINDELL BOULEVARD
ST. LOUIS, MO 63108
PH. 314-454-0222
CERTIFICATE/LICENSE NO. 001501

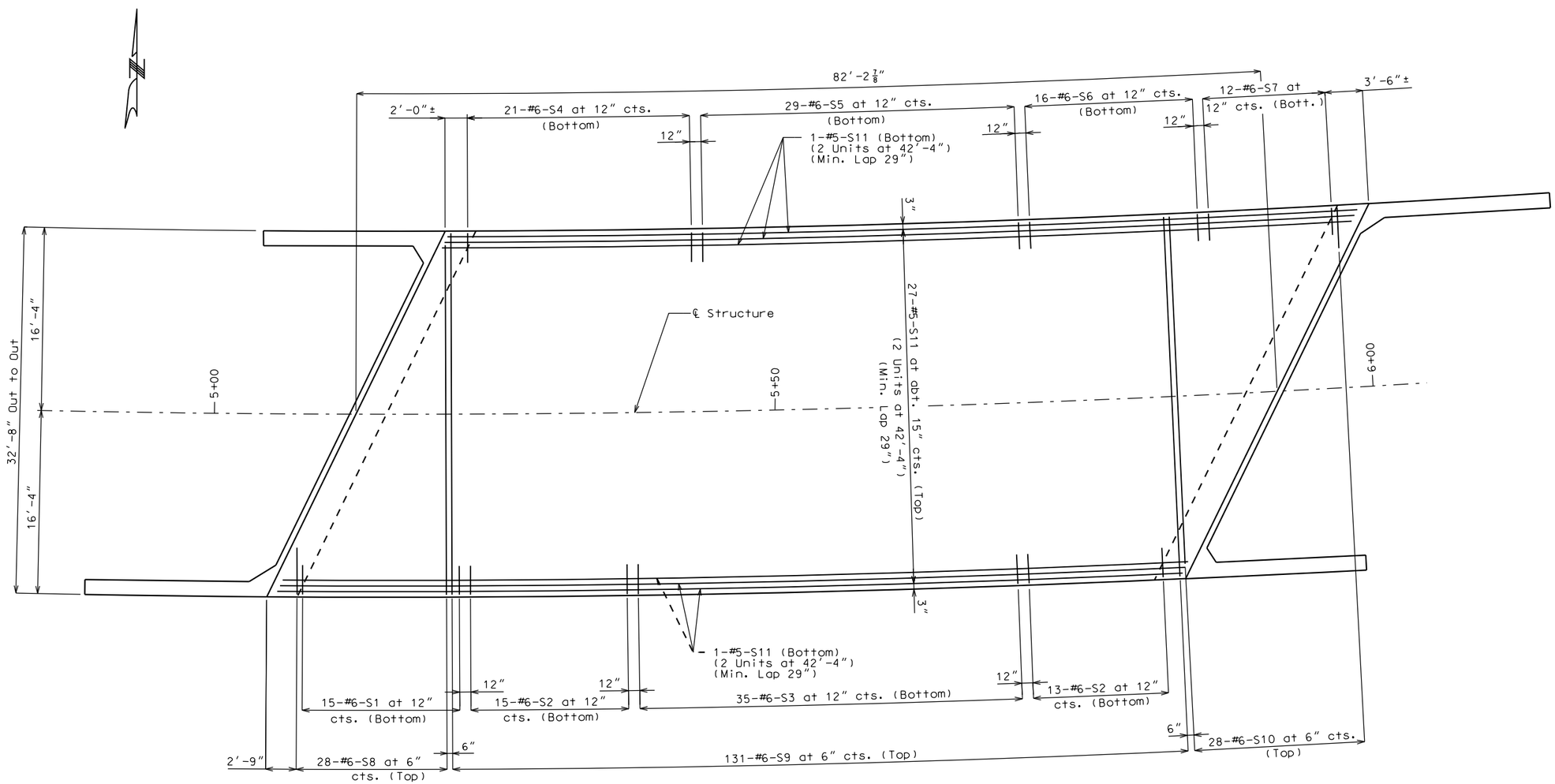

SPAN (1-2)

PLAN

Detailed Sept. 2016
Checked Sept. 2016

Note: This drawing is not to scale. Follow dimensions.

STATE OF MISSOURI
STEPHEN M. KSIAZEK
NUMBER E-24698
REGISTERED PROFESSIONAL ENGINEER

DATE PREPARED	
2/3/2017	
STATE	SHEET NO.
MO	30
ROUTE	
BIG HOLLOW	
COUNTY	
JEFFERSON	
JOB NO.	
14-6048	
PROJECT NO.	
STP-9900 (646)	
BRIDGE NO.	
36900031	

DATE	DESCRIPTION

IF A SEAL IS PRESENT ON THIS SHEET IT HAS BEEN ELECTRONICALLY SEALED AND DATED.

JEFFERSON COUNTY PUBLIC WORKS DEPARTMENT
P.O. BOX 100
HILLSBORO, MO 63050
(636-797-5340) PHONE
(636-797-5565) FAX

ABNA
4140 LINDELL BOULEVARD
ST. LOUIS, MO 63108
PH. 314-454-0222
CERTIFICATE/LICENSE NO. 001501

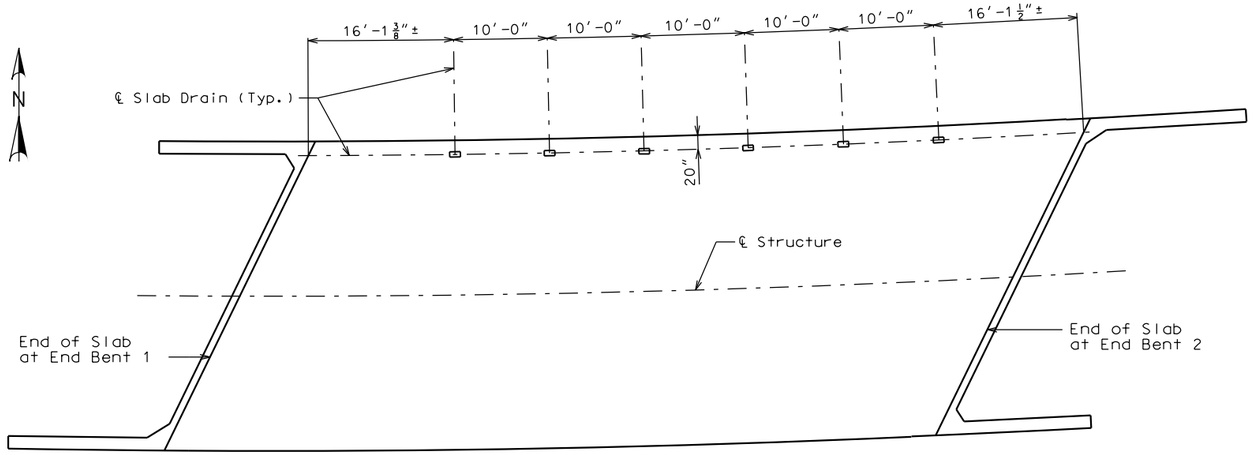

PLAN OF SLAB SHOWING SLAB DRAIN LOCATIONS

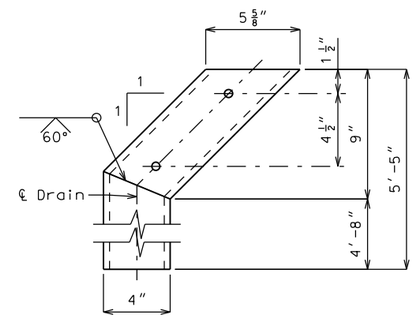

ELEVATION OF DRAIN

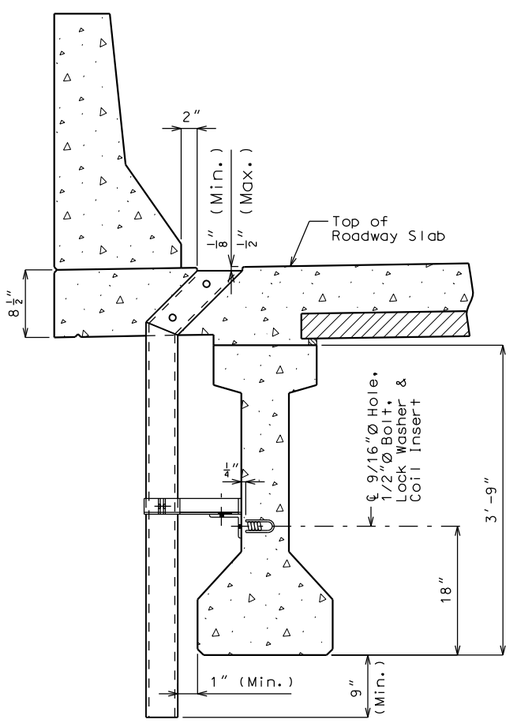

PART SECTION NEAR DRAIN

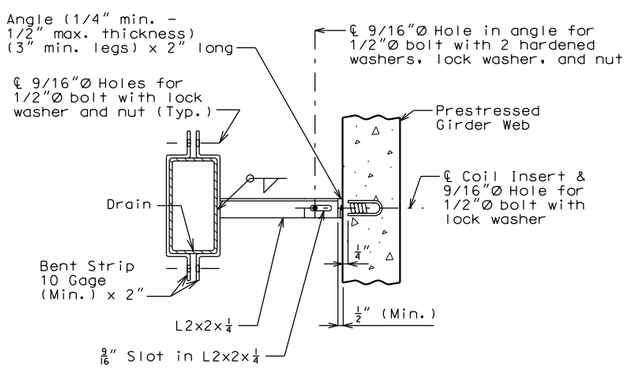

PART SECTION SHOWING BRACKET ASSEMBLY

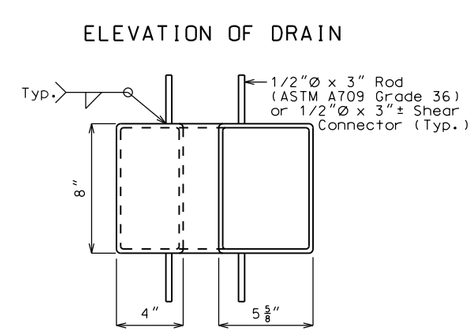

PLAN OF STEEL DRAIN

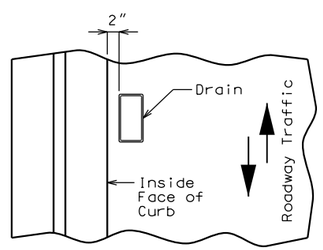

PART PLAN OF SLAB AT DRAIN

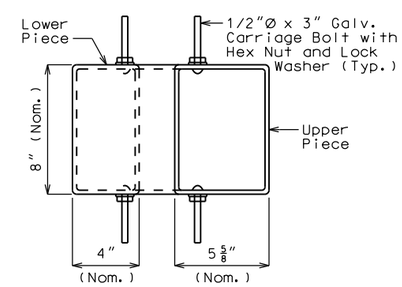

PLAN OF OPTIONAL FRP DRAIN

General Notes:

Slab drain bracket assembly shall be ASTM A709 Grade 36 steel.

Locate drains in slab by dimensions shown in Part Section Near Drain.

Reinforcing steel shall be shifted to clear drains.

The coil inserts and bracket assembly shall be galvanized in accordance with ASTM A123.

All bolts, hardened washers, lock washers and nuts shall be galvanized in accordance with ASTM A153.

Shop drawings will not be required for the slab drains and the bracket assembly.

The coil insert required for the bracket assembly attachment shall be located on the prestressed girder shop drawings.

Coil inserts shall have a concrete pull-out strength (ultimate load) of at least 2,500 pounds in 5,000 psi concrete.

The bolt required to attach the slab drain bracket assembly to the prestressed girder web shall be supplied by the prestressed girder fabricator.

Notes (Steel Drain):

Slab drains may be fabricated of either 1/4" welded sheets of ASTM A709 Grade 36 steel or from 1/4" structural steel tubing ASTM A500 or A501.

Outside dimensions of drains are 8" x 4".

The drains shall be galvanized in accordance with ASTM A123.

Notes (Optional FRP Drain)

Fiberglass Reinforced Polymer (FRP) slab drains may be substituted for steel slab drains as a contractor's option.

Drains shall be machine filament-wound thermosetting resin tubing meeting the requirements of ASTM D2996 with the following exceptions:

Shape of drains shall be rectangular with outside nominal dimensions of 8" x 4".

Minimum reinforced wall thickness shall be 1/4 inch.

The resin used shall be ultraviolet (UV) resistant and/or have UV inhibitors mixed throughout. Drains may have an exterior coating for additional UV resistance.

The color of the slab drain shall be Gray (Federal Standard #26373). The color shall be uniform throughout the resin and any coating used.

The combination of materials used in the manufacture of the drains shall be tested for UV resistance in accordance with ASTM D4329 Cycle A. The representative material shall withstand at least 500 hours of testing with only minor discoloration and without any physical deterioration. The contractor shall furnish the results of the required ultraviolet testing prior to acceptance of the slab drains.

At the contractor's option, drains may be field cut. The method of cutting FRP slab drain shall be recommended by the manufacturer to ensure a smooth, chip free cut.

No additional payment will be made for this substitution.

STATE OF MISSOURI
STEPHEN K. SEIBERT
NUMBER E-24698
REGISTERED PROFESSIONAL ENGINEER

DATE PREPARED	
2/3/2017	
STATE	SHEET NO.
MO	31
ROUTE	
BIG HOLLOW	
COUNTY	
JEFFERSON	
JOB NO.	
14-6048	
PROJECT NO.	
STP-9900 (646)	
BRIDGE NO.	
36900031	

DATE	DESCRIPTION

IF A SEAL IS PRESENT ON THIS SHEET IT HAS BEEN ELECTRONICALLY SEALED AND DATED.

JEFFERSON COUNTY PUBLIC WORKS
DEPARTMENT
P.O. BOX 100
HILLSBORO, MO 63050
(636-797-5340) PHONE
(636-797-5565) FAX

ABNA
4140 LINDELL BOULEVARD
ST. LOUIS, MO 63108
PH. 314-454-0222
CERTIFICATE/LICENSE NO. 001501

SLAB DRAIN DETAILS

Detailed Sept. 2016
Checked Sept. 2016

Note: This drawing is not to scale. Follow dimensions.

J:\2014\6048\Cadd\Bridge\B_36900031_016_Floor Drain.dgn 2:11:49 PM 2/3/2017

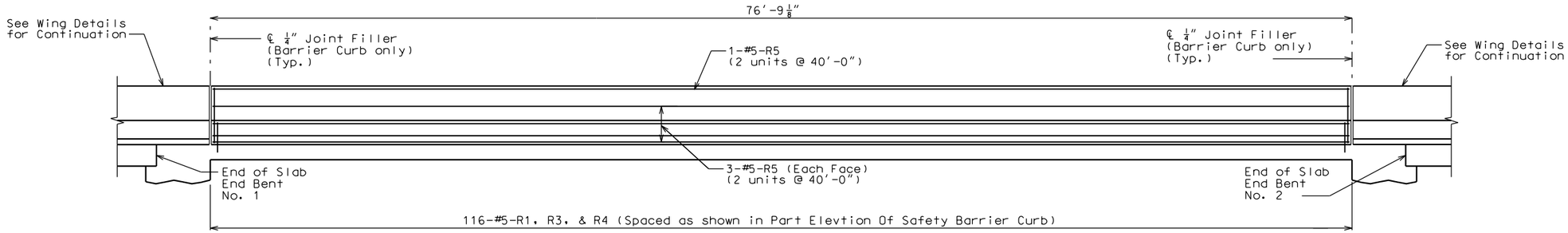

ELEVATION OF LEFT SAFETY BARRIER CURB

Longitudinal dimensions are horizontal.

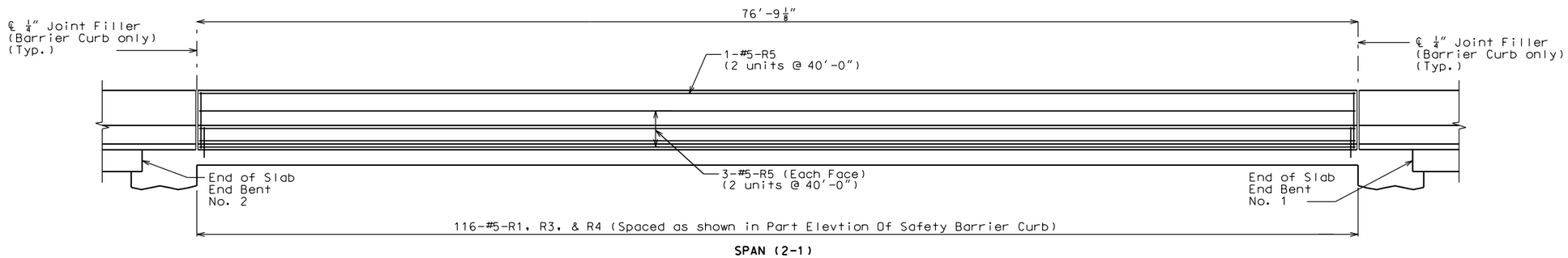

ELEVATION OF RIGHT SAFETY BARRIER CURB

Longitudinal dimensions are horizontal.

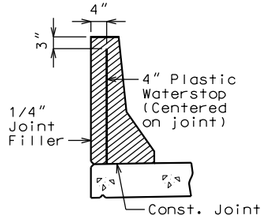

PLASTIC WATERSTOP DETAIL

Plastic waterstop shall be placed in all safety barrier curb filled joints, except structures with superelevation, use on all lower safety barrier curb joints only.

Cost of plastic waterstop, complete in place, will be considered completely covered by the contract unit price for Safety Barrier Curb.

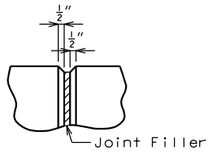

FILLED JOINT DETAIL

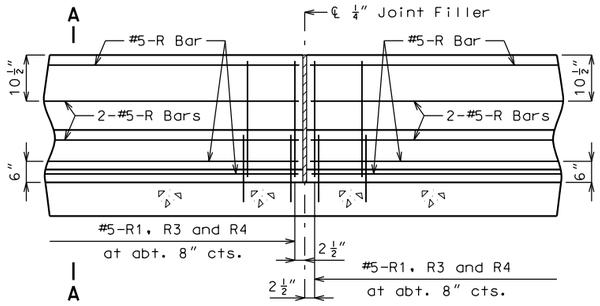

PART ELEVATION OF SAFETY BARRIER CURB (CAST-IN-PLACE CONVENTIONAL FORMING)

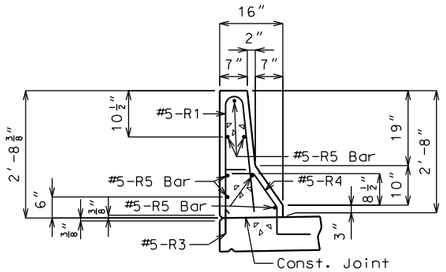

SECTION A-A

Use a minimum lap of 3'-1" for #5 horizontal safety barrier curb bars.

The cross-sectional area above the slab = 2.27 sq. ft.

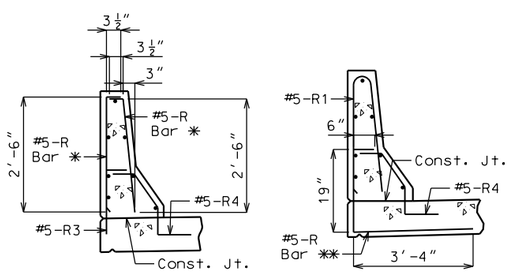

R-BAR PERMISSIBLE ALTERNATE SHAPE

✱ The R1 bar may be separated into two bars as shown, at the contractor's option, only when slip forming is not used. (All dimensions are out to out.)

✱✱ The R3 bar and #5 bottom transverse slab bar in cantilever (P/S panels only) combination may be furnished as one bar as shown, at the contractor's option.

General Notes

Top of safety barrier curb shall be built parallel to grade with barrier curb joints (except at end bents) normal to grade.

All exposed edges of safety barrier curb shall have either a 1/2-inch radius or a 3/8-inch bevel, unless otherwise noted.

Payment for all concrete and reinforcement, complete in place, will be considered completely covered by the contract unit price for Safety Barrier Curb per linear foot.

Concrete in the safety barrier curb shall be Class B-1.

Measurement of safety barrier curb is to the nearest linear foot for each structure, measured along the outside top of slab from end of wing to end of wing.

Concrete traffic barrier delineators shall be placed on top of the safety barrier curb as shown on Missouri Standard Plans 617.10 and in accordance with Sec 617. Delineators on bridges with two-lane, two-way traffic shall have retroreflective sheeting on both sides. Concrete traffic barrier delineators will be considered completely covered by the contract unit price for Safety Barrier Curb.

DETAILS OF SAFETY BARRIER CURB

Detailed Sept. 2016
Checked Sept. 2016

Note: This drawing is not to scale. Follow dimensions.

STATE OF MISSOURI — STEPHEN K. SEEVERS — NUMBER E-24698 — REGISTERED PROFESSIONAL ENGINEER

DATE PREPARED	2/3/2017
STATE	MO
SHEET NO.	32
ROUTE	BIG HOLLOW
COUNTY	JEFFERSON
JOB NO.	14-6048
PROJECT NO.	STP-9900 (646)
BRIDGE NO.	36900031

DATE	DESCRIPTION

IF A SEAL IS PRESENT ON THIS SHEET IT HAS BEEN ELECTRONICALLY SEALED AND DATED.

JEFFERSON COUNTY PUBLIC WORKS DEPARTMENT
P.O. BOX 100
HILLSBORO, MO 63050
(636-797-5340) PHONE
(636-797-5565) FAX

ABNA
4140 LINDELL BOULEVARD
ST. LOUIS, MO 63108
PH. 314-454-0222
CERTIFICATE/LICENSE NO. 001501

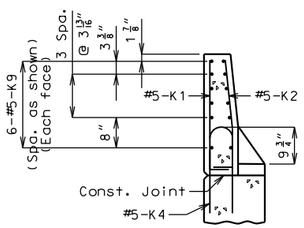

SECTION A-A

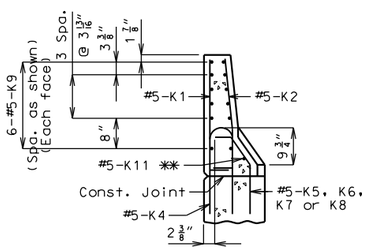

SECTION B-B

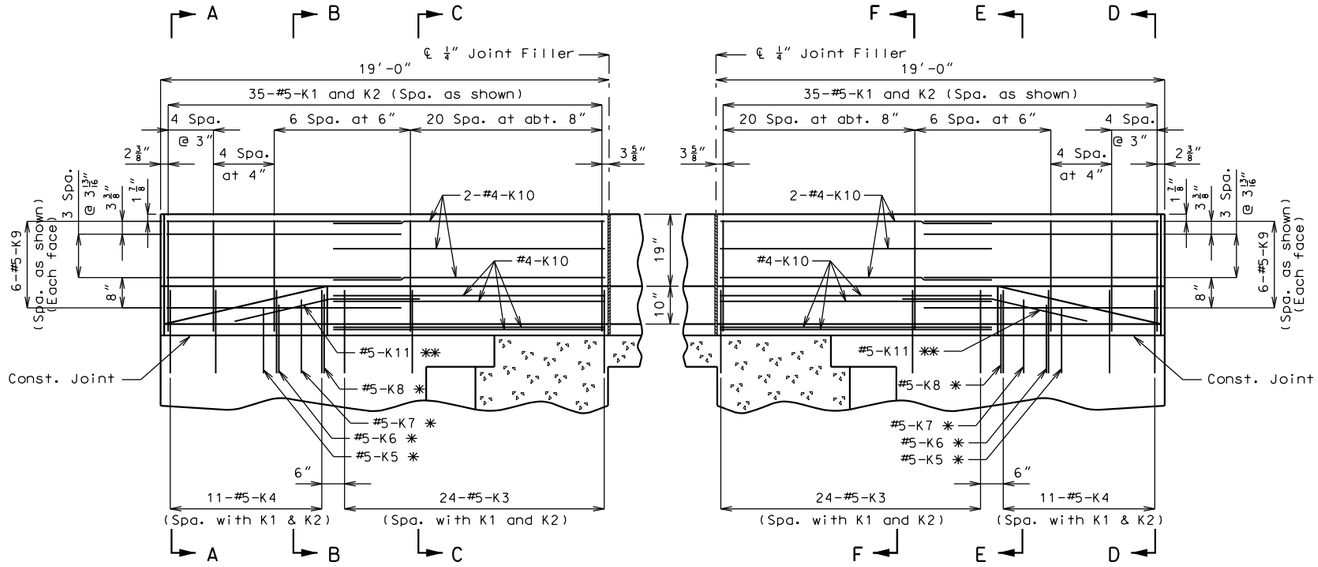

ELEVATION

ELEVATION

✱ Spaced with #5-K4 bars.

✱✱ Fit bar to follow transition face of curb.

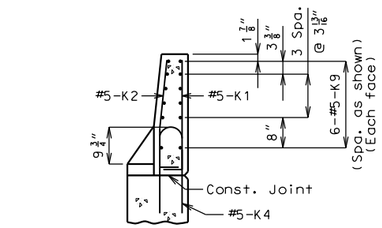

SECTION D-D

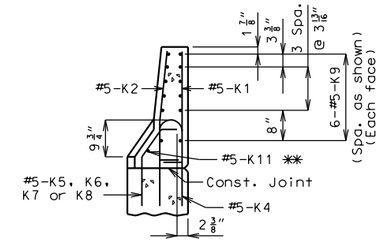

SECTION E-E

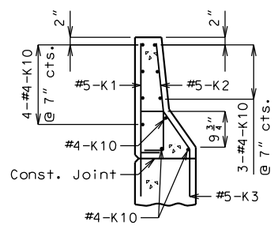

SECTION C-C

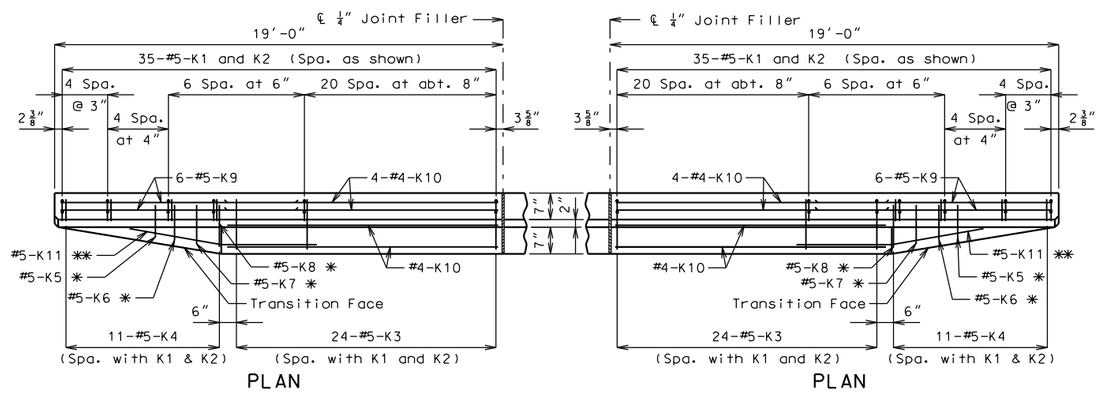

PLAN

PLAN

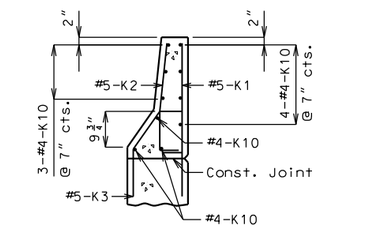

SECTION F-F

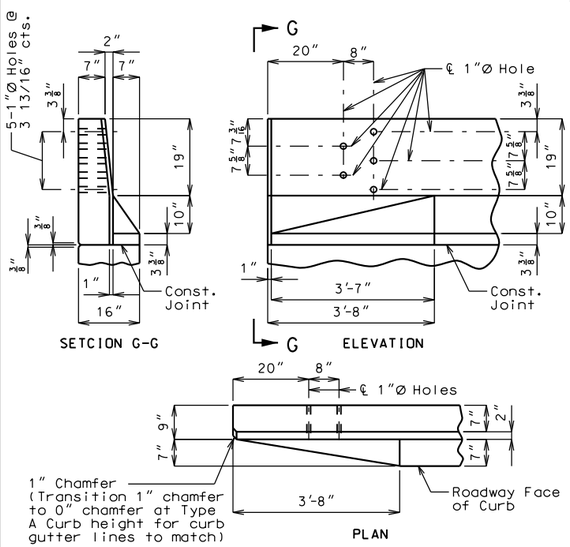

DETAILS OF GUARD RAIL ATTACHMENT

Note: Use a minimum lap of 2'-7" between K9 and K10 bars.

Concrete traffic barrier delineators shall be placed on top of the safety barrier curb as shown on Missouri Standard Plans 617.10 and in accordance with Sec 617. Delineators on bridges with two-lane, two way traffic shall have retroreflective sheeting on both sides. Concrete traffic barrier delineators will be considered completely covered by the contract unit price for Safety Barrier Curb.

(Left barrier curb shown, right barrier curb similar)

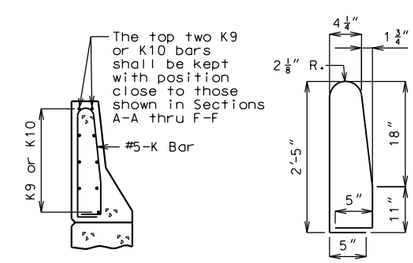

K1-K2 BAR PERMISSIBLE ALTERNATE SHAPE

(K3 or K4 thru K8 bars not shown for clarity)

The K1 and K2 bar combination may be furnished as one bar as shown, at the contractor's option.

Detailed Sept. 2016
Checked Sept. 2016

Note: This drawing is not to scale. Follow dimensions.

Sheet No. 18 of 25

STATE OF MISSOURI
STEPHEN K. SCHUTZ
NUMBER E-24698
REGISTERED PROFESSIONAL ENGINEER

DATE PREPARED	
2/3/2017	
STATE	SHEET NO.
MO	33

ROUTE: BIG HOLLOW
COUNTY: JEFFERSON
JOB NO.: 14-6048
PROJECT NO.: STP-9900 (646)
BRIDGE NO.: 36900031

DESCRIPTION	DATE

IF A SEAL IS PRESENT ON THIS SHEET IT HAS BEEN ELECTRONICALLY SEALED AND DATED.

JEFFERSON COUNTY PUBLIC WORKS DEPARTMENT
P.O. BOX 100
HILLSBORO, MO 63050
(636-797-5340) PHONE
(636-797-5565) FAX

ABNA
4140 LINDELL BOULEVARD
ST. LOUIS, MO 63108
PH. 314-454-0222
CERTIFICATE/LICENSE NO. 001501

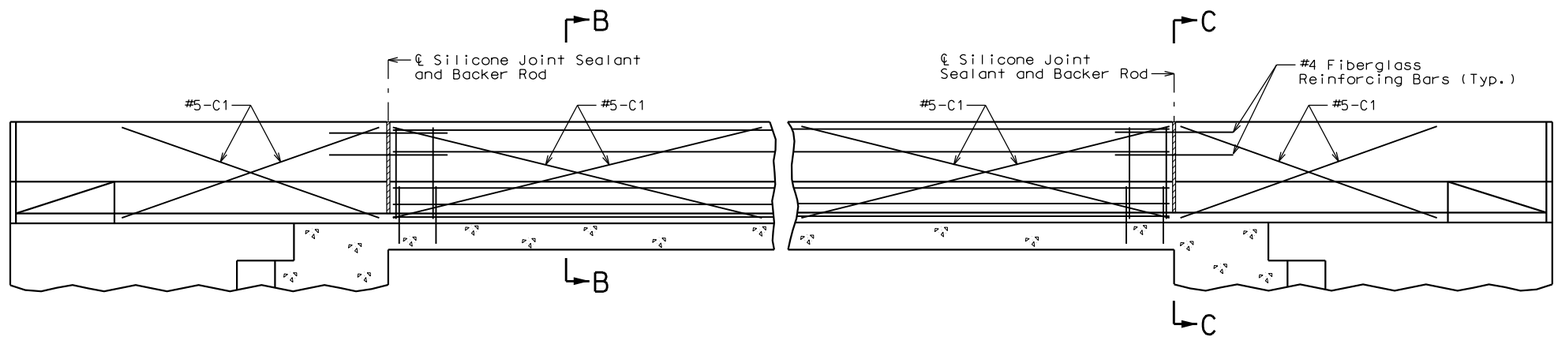

TYPICAL ELEVATION OF SAFETY BARRIER CURB AT SUPPORT LOCATIONS

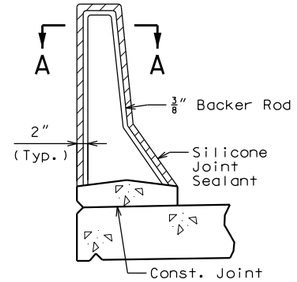

SECTION THRU JOINT

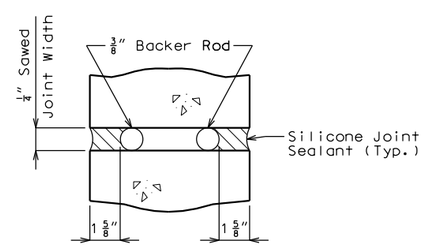

SECTION A-A

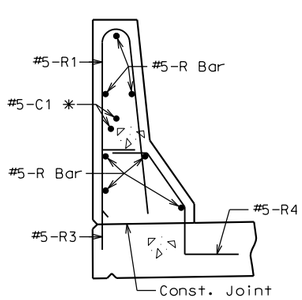

SECTION B-B

✳ Each side of joint location.

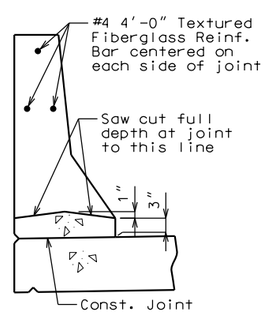

SECTION C-C

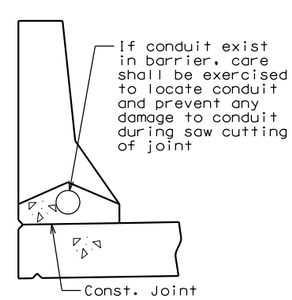

SECTION C-C

(Use when conduit required)

OPTIONAL SLIP-FORM SAFETY BARRIER CURB

General Notes:

Top of safety barrier curb shall be built parallel to grade with barrier curb joints (except at end bents) normal to grade.

All exposed edges of safety barrier curb shall have either a 1/2-inch radius or a 3/8-inch bevel, unless otherwise noted.

Payment for all concrete and reinforcement, complete in place, will be considered completely covered by the contract unit price for Safety Barrier Curb per linear foot.

Concrete in the safety barrier curb shall be Class B-1.

Measurement of safety barrier curb is to the nearest linear foot for each structure, measured along the outside top of slab from end of wing to end of wing.

Concrete traffic barrier delineators shall be placed on top of the safety barrier curb as shown on Missouri Standard Plans 617.10 and in accordance with Sec 617. Delineators on bridges with two-lane, two-way traffic shall have retroreflective sheeting on both sides. Concrete traffic barrier delineators will be considered completely covered by the contract unit price for Safety Barrier Curb.

Joint sealant and backer rods shall be used on all slip-form barrier curbs instead of joint filler and shall be in accordance with Sec 717 for silicone joint sealant for saw cut and formed joints.

Plastic waterstop shall not be used with slip-form option.

For slip-form option, all sides of the safety barrier curb shall have a vertically broomed finish and the curb top shall have a transversely broomed finish.

C bars (slip-form option only) shall be used in addition to cast-in-place conventional forming reinforcement for bridge safety barrier curb.

Cost of silicone joint sealant and backer rod, complete in place, will be considered completely covered by the contract unit price for Safety Barrier Curb.

Detailed Sept. 2016
Checked Sept. 2016

Note: This drawing is not to scale. Follow dimensions.

STATE OF MISSOURI
STEPHEN K. SCHUPP
NUMBER E-24698
REGISTERED PROFESSIONAL ENGINEER

DATE PREPARED	
2/3/2017	
STATE	SHEET NO.
MO	34
ROUTE	
BIG HOLLOW	
COUNTY	
JEFFERSON	
JOB NO.	
14-6048	
PROJECT NO.	
STP-9900 (646)	
BRIDGE NO.	
36900031	

DESCRIPTION	DATE

JEFFERSON COUNTY PUBLIC WORKS DEPARTMENT
P.O. BOX 100
HILLSBORO, MO 63050
(636-797-5340) PHONE
(636-797-5565) FAX

ABNA
4140 LINDELL BOULEVARD
ST. LOUIS, MO 63108
PH. 314-454-0222
CERTIFICATE/LICENSE NO. 001501

IF A SEAL IS PRESENT ON THIS SHEET IT HAS BEEN ELECTRONICALLY SEALED AND DATED.

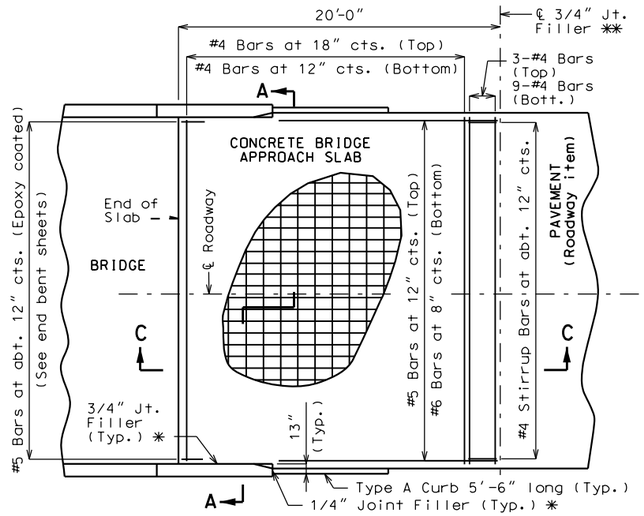

PART PLAN OF SQUARED STRUCTURE

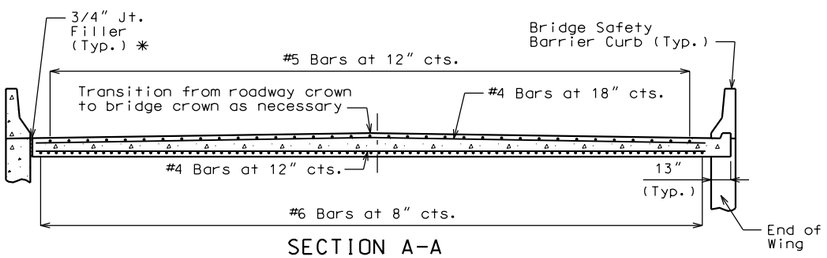

SECTION A-A

With the approval of the engineer, the contractor may crown the bottom of the approach slab to match the crown of the roadway surface.

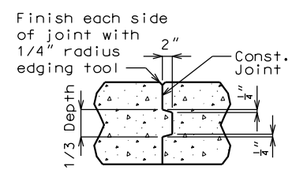

CONCRETE CONST. JOINT DETAIL

(If required)

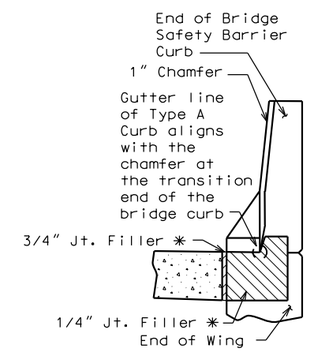

4" TYPE A CURB

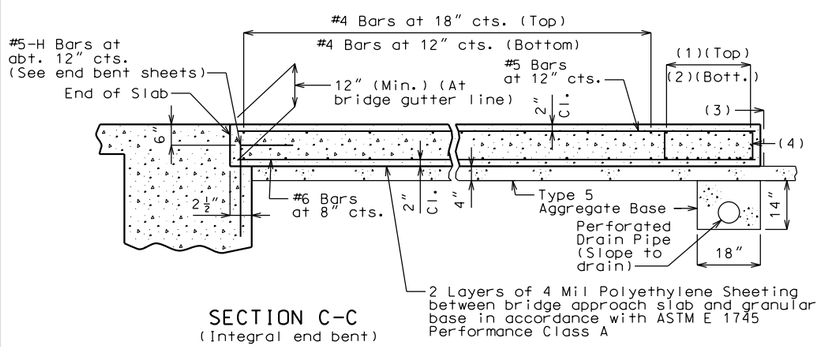

SECTION C-C

(Integral end bent)

(1) 3-#4 Bars

(2) 9-#4 Bars

(3) ℄ 3/4" Jt. Filler ✱✱

(4) #4 Stirrup Bars at abt. 12" cts.; 2'-0"x 8" (Min.) out to out; Actual length = 5'-10" (Min.); 90° stirrup hook at bottom; Stirrup height (8") and actual length vary due to crown.

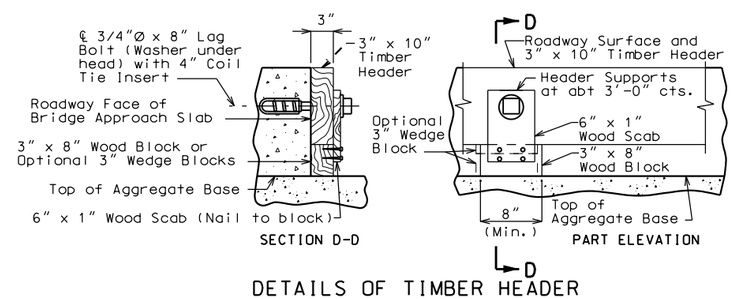

DETAILS OF TIMBER HEADER

Remove timber header when concrete pavement is placed.

General Notes:

Unseal access holes shall not be required for this project.

The contractor shall pour and satisfactorily finish the bridge slab before placing the bridge approach slab.

Drain pipe may be either 6" diameter corrugated metallic-coated pipe underdrain, 4" diameter corrugated polyvinyl chloride (PVC) drain pipe, or 4" diameter corrugated polyethylene (PE) drain pipe.

Notes For Concrete Slab Only:

All concrete for the bridge approach slab shall be in accordance with Sec 503 (f'c = 4,000 psi).

The reinforcing steel in the bridge approach slab shall be epoxy coated Grade 60 with fy = 60,000 psi.

Longitudinal construction joints in bridge approach slab shall be aligned with longitudinal construction joints in bridge slab.

Minimum clearance to reinforcing steel shall be 1½", unless otherwise shown.

The reinforcing steel in the bridge approach slab shall be continuous. The transverse reinforcing steel may be made continuous by lap splicing the #4 bars 23".

All joint filler shall be in accordance with Sec 1057 for preformed fiber expansion joint filler except as noted.

Payment for furnishing all materials, labor and excavation necessary to construct the concrete bridge approach slab, including the timber header, underdrain, Type 5 aggregate base, joint filler, and all other appurtenances and incidental work as shown on this sheet, complete in place, will be considered completely covered by the contract unit price for Bridge Approach Slab (Minor Road) per square yard.

See Missouri Standard Plans Drawing 609.00 for details of Type A Curb.

✱ Seal joint between vertical face of bridge approach slab and wing with "Silicone Joint Sealant for Saw Cut and Formed Joints" in accordance with Sec 717.

STATE OF MISSOURI
STEPHEN K. SOLTY
NUMBER E-24698
REGISTERED PROFESSIONAL ENGINEER

DATE PREPARED	
2/3/2017	
STATE	SHEET NO.
MO	35
ROUTE	
BIG HOLLOW	
COUNTY	
JEFFERSON	
JOB NO.	
14-6048	
PROJECT NO.	
STP-9900 (646)	
BRIDGE NO.	
36900031	

DATE	DESCRIPTION

IF A SEAL IS PRESENT ON THIS SHEET IT HAS BEEN ELECTRONICALLY SEALED AND DATED.

JEFFERSON COUNTY PUBLIC WORKS DEPARTMENT
P.O. BOX 100
HILLSBORO, MO 63050
(636-797-5340) PHONE
(636-797-5565) FAX

ABNA
4140 LINDELL BOULEVARD
ST. LOUIS, MO 63108
PH. 314-454-0222
CERTIFICATE/LICENSE NO. 001501

DETAILS OF BRIDGE APPROACH SLAB (MINOR ROAD)

Detailed Sept. 2016
Checked Sept. 2016

Note: This drawing is not to scale. Follow dimensions.

J:\2014\6048\Cadd\Bridge\B_36900031_020_App Slab.dgn 2:13:14 PM 2/3/2017

BILL OF REINFORCING STEEL

NO. REQ'D.	MARK NO. SIZE	MARK NO. MARK	LOCATION	EPOXY (E)	SHAPE NO.	STIRRUP (S)	SUBSTR. (X)	VARIES (V)	NO. EACH	B FT. IN.	C FT. IN.	D FT. IN.	E FT. IN.	F FT. IN.	H FT. IN.	K FT. IN.	NOMINAL LENGTH FT. IN.	ACTUAL LENGTH FT. IN.	WEIGHT LBS.
			END BENT 1																
14	6	F101	WINGWALL		23					14.000	4 8.000	14.000	11.750	7.500	11.750	7.500	6 12	6 11	145
12	6	F102	WINGWALL		23					14.000	3 0.000	14.000	11.750	7.500	11.750	7.500	5 4	5 3	95
4	6	F103	BEAM		32						4 8.000	2 3.000			2 0.500	11.500	6 11	6 7	40
4	6	F104	BEAM		15					2 3.000	4 8.000				2 0.500	11.500	6 11	6 10	41
8	8	H101	BEAM		20					35 9.000							35 9	35 9	764
8	6	H102	BEAM		20					35 9.000							35 9	35 9	430
8	6	H103	DIAPHRAGM		20					22.000							1 10	1 10	22
20	6	H104	DIAPHRAGM		20					4 5.000							4 5	4 5	133
4	6	H105	DIAPHRAGM		20					35 9.000							35 9	35 9	215
6	5	H106	STRAND TIE		23					15.000	17.000	15.000	6.375	13.625	6.375	13.625	3 11	3 11	25
4	8	H107	DIAPHRAGM	E	20					35 9.000							35 9	35 9	382
35	5	H108	APP HAUNCH	E	19					2 0.000	15.000						3 3	3 1	113
2	8	H109	WINGWALL	E	20					18 1.000							18 1	18 1	97
6	8	H110	WINGWALL		20					18 1.000							18 1	18 1	290
30	6	H111	WINGWALL		20					18 1.000							18 1	18 1	815
2	8	H112	WINGWALL	E	20					18 1.000							18 1	18 1	97
6	8	H113	WINGWALL		20					18 1.000							18 1	18 1	290
26	6	H114	WINGWALL		20					18 1.000							18 1	18 1	706
26	5	U101	BEAM		10						7 4.000	3 0.250					17 8	17 5	472
4	5	U102	BEAM		13	S				3 0.250	5 2.000	3 0.250	5 2.000				17 3	16 12	71
4	5	U103	BEAM		10						4 7.000	3 0.250					12 2	11 11	50
31	6	U104	DIAPHRAGM		19					3 7.375	3 0.250						6 8	6 6	303
31	5	U105	DIAPHRAGM	E	10						4 5.375	3 0.250					11 11	11 8	377
45	6	U106	DIAPHRAGM	E	19					3 2.000	4 9.500						7 11	7 10	529
6	5	U107	BEAM		13	S				3 0.250	4 10.375	3 0.250	410.375				16 8	16 4	102
4	5	U108	BEAM		13	S				3 0.250	4 7.000	3 0.250	4 7.000				16 2	15 10	66
10	5	V101	BEAM		20					7 4.000							7 4	7 4	76
18	6	V102	DIAPHRAGM		20					3 7.000							3 7	3 7	97
36	6	V103	WINGWALL		20					9 11.000							9 11	9 11	536
36	6	V104	WINGWALL		20					9 2.000							9 2	9 2	496
			END BENT 2																
13	6	F201	WINGWALL		23					14.000	4 8.000	14.000	11.750	7.500	11.750	7.500	6 12	6 11	135
14	6	F202	WINGWALL		23					14.000	3 0.000	14.000	11.750	7.500	11.750	7.500	5 4	5 3	110
4	6	F203	BEAM		32						4 8.000	2 3.000			2 0.500	11.500	6 11	6 7	40
4	6	F204	BEAM		15					2 3.000	4 8.000				2 0.500	11.500	6 11	6 10	41
8	8	H201	BEAM		20					35 9.000							35 9	35 9	764
8	6	H202	BEAM		20					35 9.000							35 9	35 9	430
8	6	H203	DIAPHRAGM		20					22.000							1 10	1 10	22
20	6	H204	DIAPHRAGM		20					4 5.000							4 5	4 5	133
4	6	H205	DIAPHRAGM		20					35 9.000							35 9	35 9	215
6	5	H206	STRAND TIE		23					15.000	17.000	15.000	6.375	13.625	6.375	13.625	3 11	3 11	25
4	8	H207	DIAPHRAGM	E	20					35 9.000							35 9	35 9	382
35	5	H208	APP HAUNCH	E	19					2 0.000	15.000						3 3	3 1	113
2	8	H209	WINGWALL	E	20					18 1.000							18 1	18 1	97
6	8	H210	WINGWALL		20					18 1.000							18 1	18 1	290
28	6	H211	WINGWALL		20					18 1.000							18 1	18 1	761
2	8	H212	WINGWALL	E	20					18 1.000							18 1	18 1	97
6	8	H213	WINGWALL		20					18 1.000							18 1	18 1	290
30	6	H214	WINGWALL		20					18 1.000							18 1	18 1	815

BILL OF REINFORCING STEEL

NO. REQ'D.	MARK NO. SIZE	MARK NO. MARK	LOCATION	EPOXY (E)	SHAPE NO.	STIRRUP (S)	SUBSTR. (X)	VARIES (V)	NO. EACH	B FT. IN.	C FT. IN.	D FT. IN.	E FT. IN.	F FT. IN.	H FT. IN.	K FT. IN.	NOMINAL LENGTH FT. IN.	ACTUAL LENGTH FT. IN.	WEIGHT LBS.
			END BENT 2 CONT.																
26	5	U201	BEAM		10						7 4.000	3 0.250					17 8	17 5	472
4	5	U202	BEAM		13	S				3 0.250	5 2.000	3 0.250	5 2.000				17 3	16 12	71
4	5	U203	BEAM		10						4 7.000	3 0.250					12 2	11 11	50
31	6	U204	DIAPHRAGM		19					3 4.000	3 0.250						6 4	6 2	287
31	5	U205	DIAPHRAGM	E	10						4 4.000	3 0.250					11 8	11 5	369
45	6	U206	DIAPHRAGM	E	19					3 0.000	4 9.500						7 9	7 8	518
6	5	U207	BEAM		13	S				3 0.250	5 0.000	3 0.250	5 0.000				16 11	16 8	104
4	5	U208	BEAM		13	S				3 0.250	4 7.000	3 0.250	4 7.000				16 2	15 10	66
10	5	V201	BEAM		20					7 4.000							7 4	7 4	76
18	6	V202	DIAPHRAGM		20					3 7.000							3 7	3 7	97
36	6	V203	WINGWALL		20					9 4.000							9 4	9 4	505
36	6	V204	WINGWALL		20					10 1.500							10 2	10 2	550
			SLAB																
15	6	S1	SLAB	E	20					2 8.000							2 8	2 8	60
28	6	S2	SLAB	E	20					2 10.000							2 10	2 10	119
35	6	S3	SLAB	E	20					3 1.000							3 1	3 1	162
21	6	S4	SLAB	E	20					2 1.000							2 1	2 1	66
29	6	S5	SLAB	E	20					2 0.000							2 0	2 0	87
16	6	S6	SLAB	E	20					2 2.000							2 2	2 2	52
12	6	S7	SLAB	E	20					2 5.000							2 5	2 5	44
28	6	S8	SLAB	E	20			V	1	2 4.500							2 5	2 5	
			INCR=12.875IN							31 4.000							31 4	31 4	709
131	6	S9	SLAB	E	20					32 5.000							32 5	32 5	6378
28	6	S10	SLAB	E	20			V	1	2 4.500							2 5	2 5	
			INCR=12.875IN							31 4.000							31 4	31 4	709
66	5	S11	SLAB	E	20					42 4.000							42 4	42 4	2914
			BARRIERS																
232	5	R1	BARRIER	E	26					2 6.000	4.250				2 6.000	3.000	5 4	5 3	1270
232	5	R3	BARRIER	E	19					17.000	6.000						1 11	1 9	423
232	5	R4	BARRIER	E	27						6.000	11.250	7.000	12.000	9.250	6.375	3 0	2 10	686
28	5	R5	BARRIER	E	20					40 0.000							40 0	40 0	1168
140	5	K1	BARRIER TRAN	E	19					2 5.000	5.125						2 10	2 9	402
140	5	K2	BARRIER TRAN	E	14					5.125	11.125	18.000			2.000	17.875	2 10	2 9	402
96	5	K3	BARRIER TRAN	E	27					3 4.125	5.125	12.000	2 6.250		9.875	6.875	7 3	7 1	709
44	5	K4	BARRIER TRAN	E	7					3 4.125	6.000						6 12	6 11	317
4	5	K5	BARRIER TRAN	E	25					2 10.625	6.750	4.375			5.500	4.000	3 10	3 9	16
4	5	K6	BARRIER TRAN	E	25					2 9.625	7.875	4.375			6.500	4.500	3 10	3 9	16
4	5	K7	BARRIER TRAN	E	25					2 8.500	9.625	4.375			7.875	5.500	3 10	3 10	16
4	5	K8	BARRIER TRAN	E	25					2 6.875	11.375	4.375			9.250	6.500	3 11	3 10	16
48	5	K9	BARRIER TRAN	E	20					6 3.000							6 3	6 3	313
40	4	K10	BARRIER TRAN	E	20					15 2.000							15 2	15 2	405
4	5	K11	BARRIER TRAN	E	8					2 2.125					2 2.000	2.375	4 4	4 4	18
16	5	C1	SLIP FORM	E	20					10 0.000							10 0	10 0	167

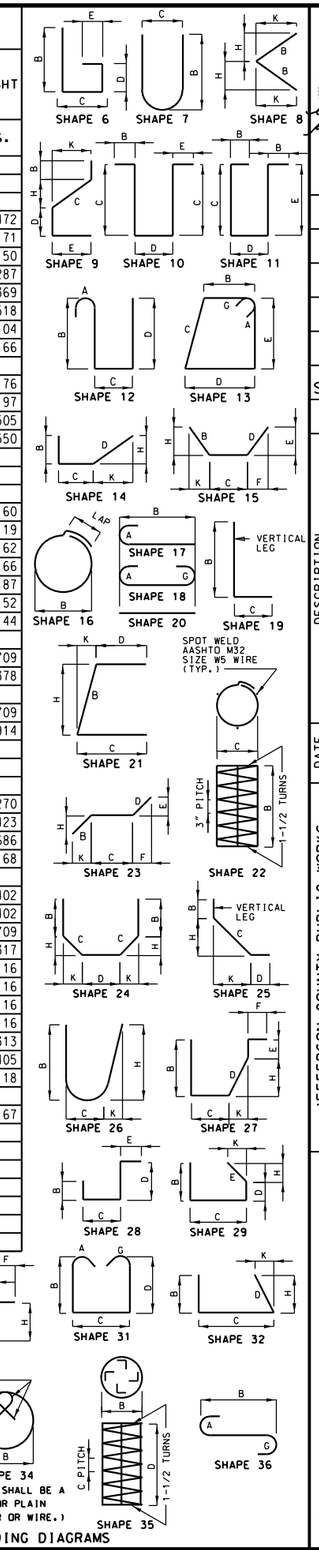

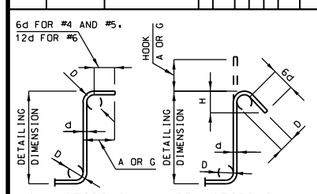

STIRRUP HOOK DIMENSIONS				
GRADES 40 - 50 - 60 KSI				
BAR SIZE	D (IN.)	90° HOOK: HOOK A OR G	135° HOOK: HOOK A OR G	135° HOOK: APPROX. H
#4	2"	4 1/2"	4 1/2"	3"
#5	2 1/2"	6"	5 1/2"	3 3/4"
#6	4 1/2"	12"	8"	4 1/2"

NOTE: UNLESS OTHERWISE NOTED DIAMETER "D" IS THE SAME FOR ALL BENDS AND HOOKS ON A BAR.

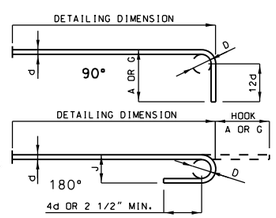

END HOOK DIMENSIONS				
		ALL GRADES		
BAR SIZE	D (IN.)	180° HOOKS: A OR G	180° HOOKS: J	90° HOOKS: A OR G
#3	2 1/4"	5"	3"	6"
#4	3"	6"	4"	8"
#5	3 3/4"	7"	5"	10"
#6	4 1/2"	8"	6"	12"
#7	5 1/4"	10"	7"	14"
#8	6"	11"	8"	16"
#9	9 1/2"	15"	11 3/4"	19"
#10	10 3/4"	17"	13 1/4"	22"
#11	12"	19"	14 3/4"	2'-0"
#14	18 1/4"	2'-3"	21 3/4"	2'-7"

NOTE:
ALL STANDARD HOOKS AND BENDS OTHER THAN 180 DEGREE ARE TO BE BENT WITH SAME PROCEDURE AS FOR 90 DEGREE STANDARD HOOKS.
HOOKS AND BENDS SHALL BE IN ACCORDANCE WITH THE PROCEDURES AS SHOWN ON THIS SHEET.
E = EPOXY COATED REINFORCEMENT.
S = STIRRUP.
X = BAR IS INCLUDED IN SUBSTRUCTURE QUANTITIES.
V = BAR DIMENSIONS VARY IN EQUAL INCREMENTS BETWEEN DIMENSIONS SHOWN ON THIS LINE AND THE FOLLOWING LINE.
NO. EA. = NUMBER OF BARS OF EACH LENGTH.
NOMINAL LENGTHS ARE BASED ON OUT TO OUT DIMENSIONS SHOWN IN BENDING DIAGRAMS AND ARE LISTED FOR FABRICATORS USE. (NEAREST INCH)
ACTUAL LENGTHS ARE MEASURED ALONG CENTERLINE BAR TO THE NEAREST INCH.
PAYWEIGHTS ARE BASED ON ACTUAL LENGTHS.
FOUR ANGLE OR CHANNEL SPACERS ARE REQUIRED FOR EACH COLUMN SPIRAL. SPACERS ARE TO BE PLACED ON INSIDE OF SPIRALS. LENGTH AND WEIGHT OF COLUMN SPIRALS DO NOT INCLUDE SPLICES OR SPACERS.
REINFORCING STEEL (GRADE 60) FY = 60,000 PSI.

STATE OF MISSOURI
STEPHEN A. SOLDER
NUMBER E-24698
REGISTERED PROFESSIONAL ENGINEER

DATE PREPARED
2/3/2017

STATE: MO
SHEET NO.: 36

ROUTE: BIG HOLLOW
COUNTY: JEFFERSON
JOB NO.: 14-6048
PROJECT NO.: STP-9900 (646)
BRIDGE NO.: 36900031

DESCRIPTION

DATE

IF A SEAL IS PRESENT ON THIS SHEET IT HAS BEEN ELECTRONICALLY SEALED AND DATED.

JEFFERSON COUNTY PUBLIC WORKS
DEPARTMENT
P.O. BOX 100
HILLSBORO, MO 63050
(636-797-5340) PHONE
(636-797-5565) FAX

ABNA
4140 LINDELL BOULEVARD
ST. LOUIS, MO 63108
PH. 314-454-0222
CERTIFICATE/LICENSE NO. 001501

Detailed Sept. 2016
Checked Sept. 2016

Note: This drawing is not to scale. Follow dimensions.

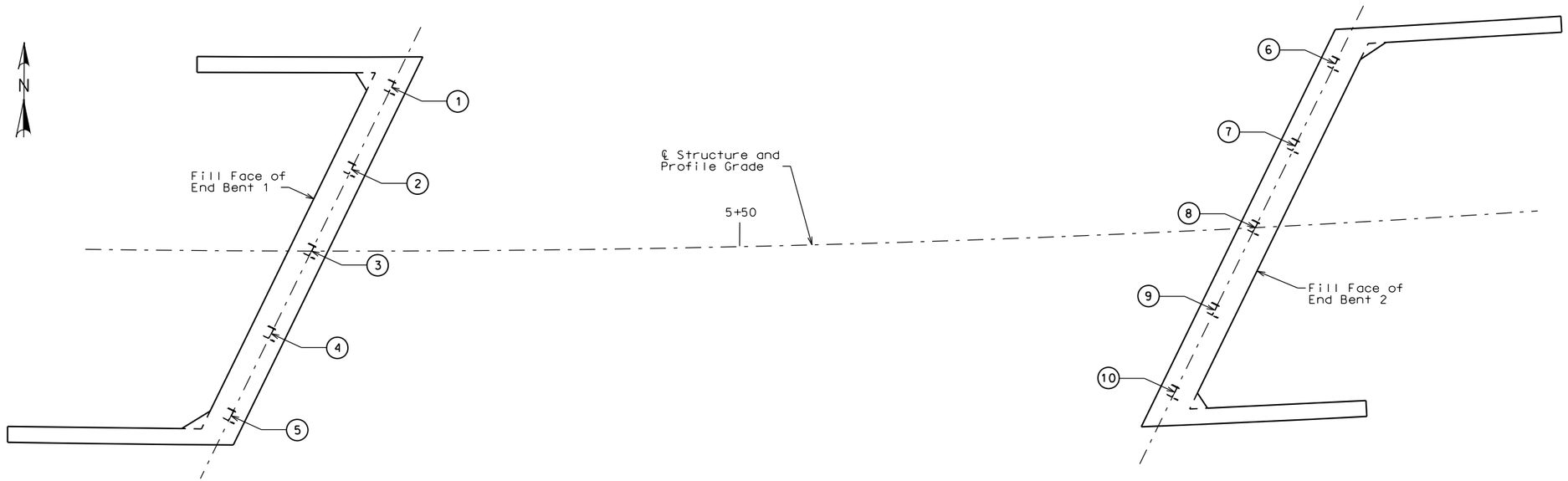

PART PLAN SHOWING
PILE NUMBERING FOR RECORDING
"AS BUILT PILE" DATA

NOTE: INDICATE IN REMARKS COLUMN:
A.) IF PILING WERE DRIVEN TO PRACTICAL REFUSAL.
B.) PILE BATTER IF OTHER THAN SHOWN ON BENT DETAIL SHEET.
C.) TYPE OF PILING USED.

NOTE: THIS SHEET TO BE COMPLETED BY CONSTRUCTION PERSONNEL.

"AS BUILT PILE" DATA

PILE NO.	LENGTH IN PLACE (FT.)	COMPUTED BEARING (KIPS)	REMARKS
			END BENT NO. 1
1			
2			
3			
4			
5			

"AS BUILT PILE" DATA

PILE NO.	LENGTH IN PLACE (FT.)	COMPUTED BEARING (KIPS)	REMARKS
			END BENT NO. 2
6			
7			
8			
9			
10			

STATE OF MISSOURI
STEPHEN K. SCHUPP
NUMBER E-24698
REGISTERED PROFESSIONAL ENGINEER

DATE PREPARED
2/3/2017

STATE	SHEET NO.
MO	37

ROUTE
BIG HOLLOW

COUNTY
JEFFERSON

JOB NO.
14-6048

PROJECT NO.
STP-9900 (646)

BRIDGE NO.
36900031

DATE	DESCRIPTION

IF A SEAL IS PRESENT ON THIS SHEET IT HAS BEEN ELECTRONICALLY SEALED AND DATED.

JEFFERSON COUNTY PUBLIC WORKS
DEPARTMENT
P.O. BOX 100
HILLSBORO, MO 63050
(636-797-5340) PHONE
(636-797-5565) FAX

ABNA
4140 LINDELL BOULEVARD
ST. LOUIS, MO 63108
PH. 314-454-0222
CERTIFICATE/LICENSE NO. 001501

Detailed Sept. 2016
Checked Sept. 2016

Note: This drawing is not to scale. Follow dimensions.

ABNA

DAILY FIELD REPORT BOREHOLE LOG

SHEET 1 OF 3
PROJECT NUMBER: 14-6048
HOLE NUMBER: BH-1

PROJECT: Big Hollow Bridge Replacment and Roadway Realignment	LOCATION: Jefferson County, Missouri		
COORDINATES:	DRILLING CONTRACTOR: Meyer Drilling		
DRILL MAKE AND MODEL: CME 750 RT	DEPTH TOP OF ROCK: 35'	DEPTH CASING & SIZE: 4¾"	HOLE SIZE: 8"
ELEVATION: 410	ANGLE FROM VERT. AND BEARING: N/A	DEPTH BOTTOM OF HOLE: 50'	
WATER LEVEL: 12'	FLUIDS AND ADDITIVES:	DATE START: 9-16-15	DATE FINISH: 9-16-15 / LOGGER: RJS

ELEVATION	DEPTH BELOW SURFACE (Feet)	SAMPLE INTERVAL	SAMPLE TYPE & NUMBER	SAMPLE RECOVERY	STANDARD PENETRATION TEST RESULT / Pocket Penetrometer tons/ft²	SYMBOLIC LOG	MOISTURE %	LIQUID LIMIT	PLASTIC LIMIT	PLASTICITY INDEX	SOIL DESCRIPTION (NAME, GRADATION OR PLASTICITY, PARTICLE SIZE DISTRIBUTION, COLOR, MOISTURE CONTENT, RELATIVE DENSITY OR CONSISTENCY, SOIL STRUCTURE, MINERALOGY, USCS GROUP SYMBOL)
	0										5" Asphalt 11" Base Rock
	1	1 to 2.5	SS1	73%	5-3-2 2.0		24.97				FILL: Firm, Brown Silty Clay with limestone gravel
	2										
	3	3.5 to 5	SS2	38%	1-1-2 2.0		23.76				FILL: Firm Brown Silty Clay with limestone gravel
	4										
	5										
	6	6 to 7.5	SS3	67%	1-3-5 1.25		26.51				FILL: Firm Brown Silty Clay with limestone gravel, trace roots
	7										
	8	8.5 to 10	SS4	83%	1-6-6 1.5		23.23	28	20	8	Firm to Stiff, Gray Silty CLAY
	9										
	10										
	11										
	12										
	13	13.5 to 15	SS5	72%	3-2-2 0.5		25.08				4" Wet Brown Silty CLAY with limestone gravel Soft Dark Gray Silty CLAY with course to medium grained Sand and limestone gravel
	14										
	15										
	16										
	17										
	18	18.5 to 20	SS6	100%	1-1-1 0.25		29.49				Wet, Very Soft, Gray Silty Clay with fine grained Sand
	19										

REMARKS:

The stratification lines represent approximate strata boundaries .
In situations the transition may be gradual.

ABNA

DAILY FIELD REPORT BOREHOLE LOG

SHEET 2 OF 3
PROJECT NUMBER: 14-6048
HOLE NUMBER: BH-1

PROJECT: Big Hollow Bridge Replacment and Roadway Realignment	LOCATION: Jefferson County, Missouri		
COORDINATES:	DRILLING CONTRACTOR: Meyer Drilling		
DRILL MAKE AND MODEL: CME 750 RT	DEPTH TOP OF ROCK: 35'	DEPTH CASING & SIZE: 4¾"	HOLE SIZE: 8"
ELEVATION: 410	ANGLE FROM VERT. AND BEARING: N/A	DEPTH BOTTOM OF HOLE: 50'	
WATER LEVEL: 12'	FLUIDS AND ADDITIVES:	DATE START: 9-16-15	DATE FINISH: 9-16-15 / LOGGER: RJS

ELEVATION	DEPTH BELOW SURFACE (Feet)	SAMPLE INTERVAL	SAMPLE TYPE & NUMBER	SAMPLE RECOVERY	STANDARD PENETRATION TEST RESULT / Pocket Penetrometer tons/ft²	SYMBOLIC LOG	MOISTURE %	LIQUID LIMIT	PLASTIC LIMIT	PLASTICITY INDEX	SOIL DESCRIPTION (NAME, GRADATION OR PLASTICITY, PARTICLE SIZE DISTRIBUTION, COLOR, MOISTURE CONTENT, RELATIVE DENSITY OR CONSISTENCY, SOIL STRUCTURE, MINERALOGY, USCS GROUP SYMBOL)
	20										
	21										
	22										
	23	23.5 to 25	SS7	100%	1-1-7 0.5		35.00				Wet,Soft, Dark Gray Silty CLAY
	24										
	25										
	26										
	27										
	28	28.5 to 30	SS8	100%	1-3-5 1.5		19.99				Wet,Soft, Dark Gray Silty CLAY with white Sandstone
	29										
	30										
	31										
	32										
	33	33.5 to 34	SS9	11%	50/2"		21.70				Medium to fine grained sand in brown Silty Clay
	34		Run 1	15%	RQD = 0%						Spoon refusal 34' Auger refusal 35' SANDSTONE: Green White, Thinly Bedded, fined Grained, Soft
	35										
	36										
	37										
	38										
	39										

REMARKS:

The stratification lines represent approximate strata boundaries .
In situations the transition may be gradual.

STATE OF MISSOURI
STEPHEN K. SEWELL
NUMBER E-24698
REGISTERED PROFESSIONAL ENGINEER

DATE PREPARED: 2/3/2017
STATE: MO | SHEET NO.: 38
ROUTE: BIG HOLLOW
COUNTY: JEFFERSON
JOB NO.: 14-6048
PROJECT NO.: STP-9900 (646)
BRIDGE NO.: 36900031

DESCRIPTION | DATE

IF A SEAL IS PRESENT ON THIS SHEET IT HAS BEEN ELECTRONICALLY SEALED AND DATED.

JEFFERSON COUNTY PUBLIC WORKS
DEPARTMENT
P.O. BOX 100
HILLSBORO, MO 63050
(636-797-5340) PHONE
(636-797-5565) FAX

ABNA
4140 LINDELL BOULEVARD
ST. LOUIS, MO 63108
PH. 314-454-0222
CERTIFICATE/LICENSE NO. 001501

Detailed Sept. 2016
Checked Sept. 2016

Note: This drawing is not to scale. Follow dimensions.

J:\2014\6048\Cadd\Bridge\B_36900031_023_Borings.dgn 2:14:12 PM 2/3/2017

ABNA

DAILY FIELD REPORT BOREHOLE LOG

SHEET 3 OF 3
PROJECT NUMBER: 14-6048
HOLE NUMBER: BH-1

PROJECT: Big Hollow Bridge Replacment and Roadway Realignment	LOCATION: Jefferson County, Missouri		
COORDINATES: 38.13031169N, 90.30030060W	DRILLING CONTRACTOR: Meyer Drilling		
DRILL MAKE AND MODEL: CME 750 RT	DEPTH TOP OF ROCK: 35'	DEPTH CASING & SIZE: 4¾"	HOLE SIZE: 8"
ELEVATION: 410	ANGLE FROM VERT. AND BEARING: N/A	DEPTH BOTTOM OF HOLE: 49'	
WATER LEVEL: 12'	FLUIDS AND ADDITIVES:	DATE START: 9-16-15	DATE FINISH: 9-16-15 / LOGGER: RJS

ELEVATION	DEPTH BELOW SURFACE (Feet)	SAMPLE INTERVAL	SAMPLE TYPE & NUMBER	SAMPLE RECOVERY	STANDARD PENETRATION TEST RESULT / Pocket Penetrometer tons/ft²	SYMBOLIC LOG	MOISTURE %	LIQUID LIMIT	PLASTIC LIMIT	PLASTICITY INDEX	SOIL DESCRIPTION (NAME, GRADATION OR PLASTICITY, PARTICLE SIZE DISTRIBUTION, COLOR, MOISTURE CONTENT, RELATIVE DENSITY OR CONSISTENCY, SOIL STRUCTURE, MINERALOGY, USCS GROUP SYMBOL)
	40										SANDSTONE: Green White, Thinly Bedded, fined Grained, Soft
	41										
	42		Run 1								
	43										
	44										
	45										SANDSTONE: Green White, Thinly Bedded, fined Grained, Soft
	46										
	47		Run 2	20%	RQD = 0%						
	48										
	49										
	50										Coring Terminated at 50'
	51										
	52										
	53										
	54										
	55										
	56										
	57										
	58										
	59										

REMARKS:

The stratification lines represent approximate strata boundaries .
In situations the transition may be gradual.

STATE OF MISSOURI
STEPHEN KSIAZEK
NUMBER E-24698
REGISTERED PROFESSIONAL ENGINEER

DATE PREPARED	2/3/2017
STATE	MO
SHEET NO.	39
ROUTE	BIG HOLLOW
COUNTY	JEFFERSON
JOB NO.	14-6048
PROJECT NO.	STP-9900 (646)
BRIDGE NO.	36900031

DESCRIPTION | DATE

IF A SEAL IS PRESENT ON THIS SHEET IT HAS BEEN ELECTRONICALLY SEALED AND DATED.

JEFFERSON COUNTY PUBLIC WORKS
DEPARTMENT

P.O. BOX 100
HILLSBORO, MO 63050
(636-797-5340) PHONE
(636-797-5565) FAX

ABNA
4140 LINDELL BOULEVARD
ST. LOUIS, MO 63108
PH. 314-454-0222
CERTIFICATE/LICENSE NO. 001501

Detailed Sept. 2016
Checked Sept. 2016

Note: This drawing is not to scale. Follow dimensions.

ABNA

DAILY FIELD REPORT BOREHOLE LOG

SHEET 1 OF 2
PROJECT NUMBER: 14-6048
HOLE NUMBER: BH-2

PROJECT: Big Hollow Bridge Replacment and Roadway Realignment	LOCATION: Jefferson County, Missouri		
COORDINATES: 38.13031027N, 90.30003327W	DRILLING CONTRACTOR: Meyer Drilling		
DRILL MAKE AND MODEL: CME 750 RT	DEPTH TOP OF ROCK: 36.3'	DEPTH CASING & SIZE: 4¼"	HOLE SIZE: 8"
ELEVATION: 410	ANGLE FROM VERT. AND BEARING: N/A	DEPTH BOTTOM OF HOLE: 39'	
WATER LEVEL: 12'	FLUIDS AND ADDITIVES:	DATE START: 9-16-15	DATE FINISH: 9-16-15 / LOGGER: RJS

ELEVATION	DEPTH BELOW SURFACE (Feet)	SAMPLE INTERVAL	SAMPLE TYPE & NUMBER	SAMPLE RECOVERY	STANDARD PENETRATION TEST RESULT / Pocket Penetrometer tons/ft²	SYMBOLIC LOG	MOISTURE %	LIQUID LIMIT	PLASTIC LIMIT	PLASTICITY INDEX	SOIL DESCRIPTION (NAME, GRADATION OR PLASTICITY, PARTICLE SIZE DISTRIBUTION, COLOR, MOISTURE CONTENT, RELATIVE DENSITY OR CONSISTENCY, SOIL STRUCTURE, MINERALOGY, USCS GROUP SYMBOL)
	0										4" Asphalt 13" Base Rock
	1	1 to 2.5	SS1	67%	5-4-3 2.75		20.51				FILL: Stiff, High Plastic, Red Brown CLAY
	2										
	3	3.5 to 5	SS2	39%	1-2-3 0.75		24.19				FILL: Firm to Stiff, Medium to High Plastic, Red Brown Silty CLAY
	4										
	5										
	6	6 to 7.5	SS3	50%	1-10-7 2.5		28.19	70	20	50	FILL: Stiff to Very Stiff, High Plastic, Red Brown to Orange CLAY with fine limestone gravel
	7										
	8	8.5 to 10	SS4	87%	2-2-3 0.25		20.78				Soft, Gray Silty CLAY with fine chert gravel trace Red medium grained sand
	9										
	10										
	11										
	12										
	13	13.5 to 15	SS5	67%	1-2-2 0.0		24.27				Very Loose, Saturated, Brown SAND trace chert gravel, trace clay
	14										
	15										
	16										
	17										
	18	18.5 to 20	SS6	22%	1-2-3 0.0		15.30				Loose, Saturated, Brown SAND trace chert gravel, trace clay
	19										

REMARKS:

The stratification lines represent approximate strata boundaries .
In situations the transition may be gradual.

ABNA

DAILY FIELD REPORT BOREHOLE LOG

SHEET 2 OF 2
PROJECT NUMBER: 14-6048
HOLE NUMBER: BH-2

PROJECT: Big Hollow Bridge Replacment and Roadway Realignment	LOCATION: Jefferson County, Missouri		
COORDINATES:	DRILLING CONTRACTOR: Meyer Drilling		
DRILL MAKE AND MODEL: CME 750 RT	DEPTH TOP OF ROCK: 36.3'	DEPTH CASING & SIZE: 4¼"	HOLE SIZE: 8"
ELEVATION: 410	ANGLE FROM VERT. AND BEARING: N/A	DEPTH BOTTOM OF HOLE: 39'	
WATER LEVEL: 12'	FLUIDS AND ADDITIVES:	DATE START: 9-16-15	DATE FINISH: 9-16-15 / LOGGER: RJS

ELEVATION	DEPTH BELOW SURFACE (Feet)	SAMPLE INTERVAL	SAMPLE TYPE & NUMBER	SAMPLE RECOVERY	STANDARD PENETRATION TEST RESULT / Pocket Penetrometer tons/ft²	SYMBOLIC LOG	MOISTURE %	LIQUID LIMIT	PLASTIC LIMIT	PLASTICITY INDEX	SOIL DESCRIPTION (NAME, GRADATION OR PLASTICITY, PARTICLE SIZE DISTRIBUTION, COLOR, MOISTURE CONTENT, RELATIVE DENSITY OR CONSISTENCY, SOIL STRUCTURE, MINERALOGY, USCS GROUP SYMBOL)
	20										
	21										
	22										
	23	23.5 to 25	SS7	17%	50/2"		19.48				Wet, Dense, Medium Grained, Brown SAND
	24										
	25										
	26										
	27										
	28	28.5 to 29	SS8	16%	30/1"		14.66				with White SAND Spoon and Auger refusal at 29'
	29		Run 1	60%	RQD = 16%						Damp, Very Dense, Medium to Fine Grained SAND
	30										
	31										
	32										
	33										
	34										
	35										
	36										
	37										SANDSTONE: Green White, thickly bedded, soft
	38										Coring terminated at 39'
	39										

REMARKS:

The stratification lines represent approximate strata boundaries .
In situations the transition may be gradual.

STATE OF MISSOURI
STEPHEN M. SEELY
NUMBER E-24698
REGISTERED PROFESSIONAL ENGINEER

DATE PREPARED	2/3/2017
STATE	MO
SHEET NO.	40
ROUTE	BIG HOLLOW
COUNTY	JEFFERSON
JOB NO.	14-6048
PROJECT NO.	STP-9900 (646)
BRIDGE NO.	36900031

DESCRIPTION
DATE

IF A SEAL IS PRESENT ON THIS SHEET IT HAS BEEN ELECTRONICALLY SEALED AND DATED.

JEFFERSON COUNTY PUBLIC WORKS DEPARTMENT
P.O. BOX 100
HILLSBORO, MO 63050
(636-797-5340) PHONE
(636-797-5565) FAX

ABNA
4140 LINDELL BOULEVARD
ST. LOUIS, MO 63108
PH. 314-454-0222
CERTIFICATE/LICENSE NO. 001501

Detailed Sept. 2016
Checked Sept. 2016

Note: This drawing is not to scale. Follow dimensions.

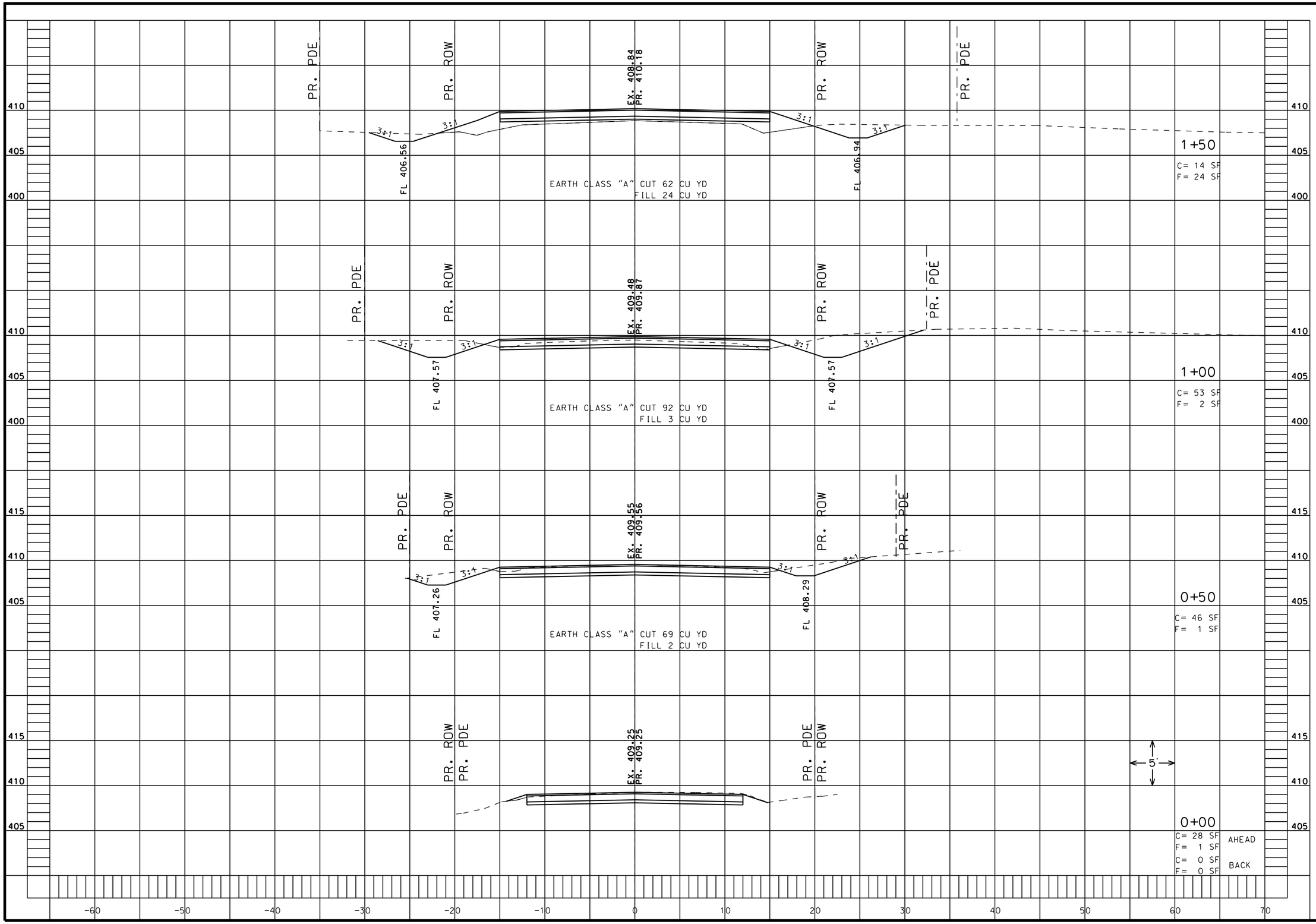

STATE OF MISSOURI
STEPHEN A. SCHUTZ
NUMBER E-24698
REGISTERED PROFESSIONAL ENGINEER

IF A SEAL IS PRESENT ON THIS SHEET IT HAS BEEN ELECTRONICALLY SEALED AND DATED.

DATE PREPARED	2/3/2017
STATE	MO
SHEET NO.	41
ROUTE	BIG HOLLOW
COUNTY	JEFFERSON
JOB NO.	14-6048
PROJECT NO.	STP-9900 (646)
BRIDGE NO.	36900031

DATE	DESCRIPTION

JEFFERSON COUNTY PUBLIC WORKS
DEPARTMENT

P.O. BOX 100
HILLSBORO, MO 63050
(636-797-5340) PHONE
(636-797-5565) FAX

ABNA
4140 LINDELL BOULEVARD
ST. LOUIS, MO 63108
PH. 314-454-0222
CERTIFICATE/LICENSE NO. 001501

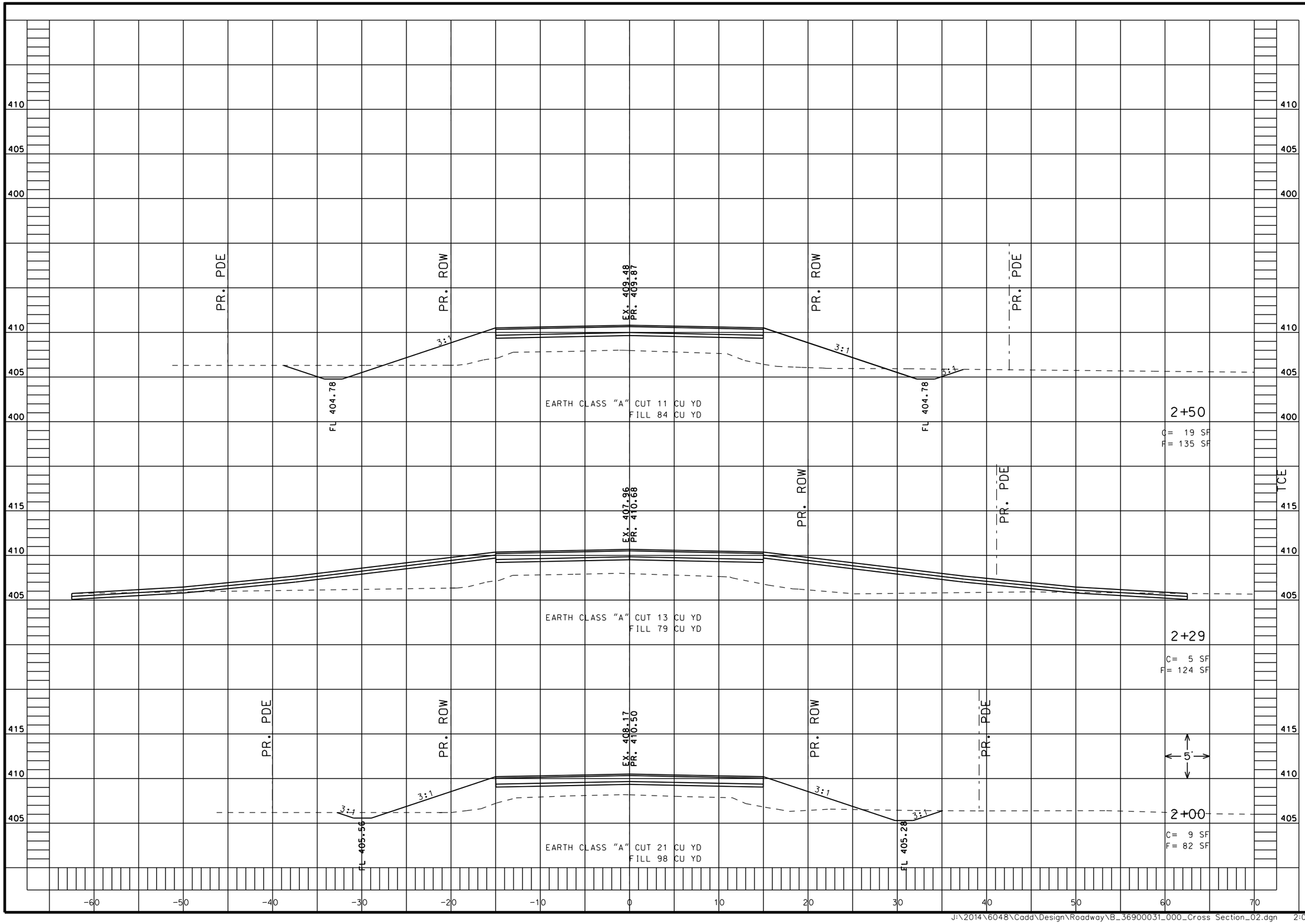

STATE OF MISSOURI
STEPHEN M. SEELBACH
NUMBER E-24698
REGISTERED PROFESSIONAL ENGINEER

DATE PREPARED	2/3/2017
STATE	MO
SHEET NO.	42
ROUTE	BIG HOLLOW
COUNTY	JEFFERSON
JOB NO.	14-6048
PROJECT NO.	STP-9900 (646)
BRIDGE NO.	36900031

DATE	DESCRIPTION

IF A SEAL IS PRESENT ON THIS SHEET IT HAS BEEN ELECTRONICALLY SEALED AND DATED.

JEFFERSON COUNTY PUBLIC WORKS
DEPARTMENT

P.O. BOX 100
HILLSBORO, MO 63050
(636-797-5340) PHONE
(636-797-5565) FAX

ABNA
4140 LINDELL BOULEVARD
ST. LOUIS, MO 63108
PH. 314-454-0222
CERTIFICATE/LICENSE NO. 001501

J:\2014\6048\Cadd\Design\Roadway\B_36900031_000_Cross Section_02.dgn 2:01:09 PM 2/3/2017

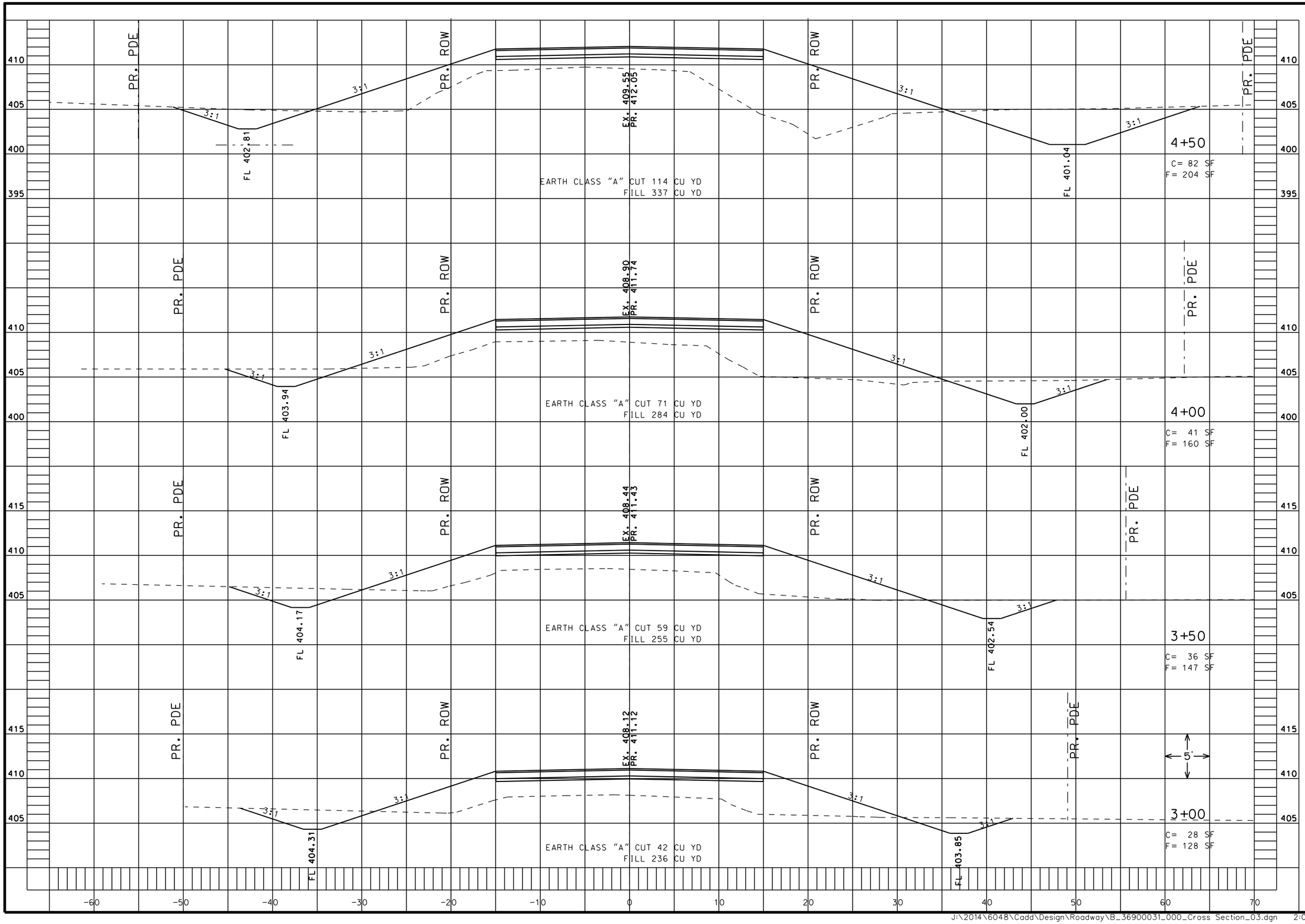

STATE OF MISSOURI
STEPHEN M. SEELY
NUMBER E-24698
REGISTERED PROFESSIONAL ENGINEER

DATE PREPARED	2/3/2017
STATE	MO
SHEET NO.	43
ROUTE	BIG HOLLOW
COUNTY	JEFFERSON
JOB NO.	14-6048
PROJECT NO.	STP-9900 (646)
BRIDGE NO.	36900031

DESCRIPTION

DATE

IF A SEAL IS PRESENT ON THIS SHEET IT HAS BEEN ELECTRONICALLY SEALED AND DATED.

JEFFERSON COUNTY PUBLIC WORKS
DEPARTMENT

P.O. BOX 100
HILLSBORO, MO 63050
(636-797-53401) PHONE
(636-797-5565) FAX

ABNA
4140 LINDELL BOULEVARD
ST. LOUIS, MO 63108
PH. 314-454-0222
CERTIFICATE/LICENSE NO. 001501

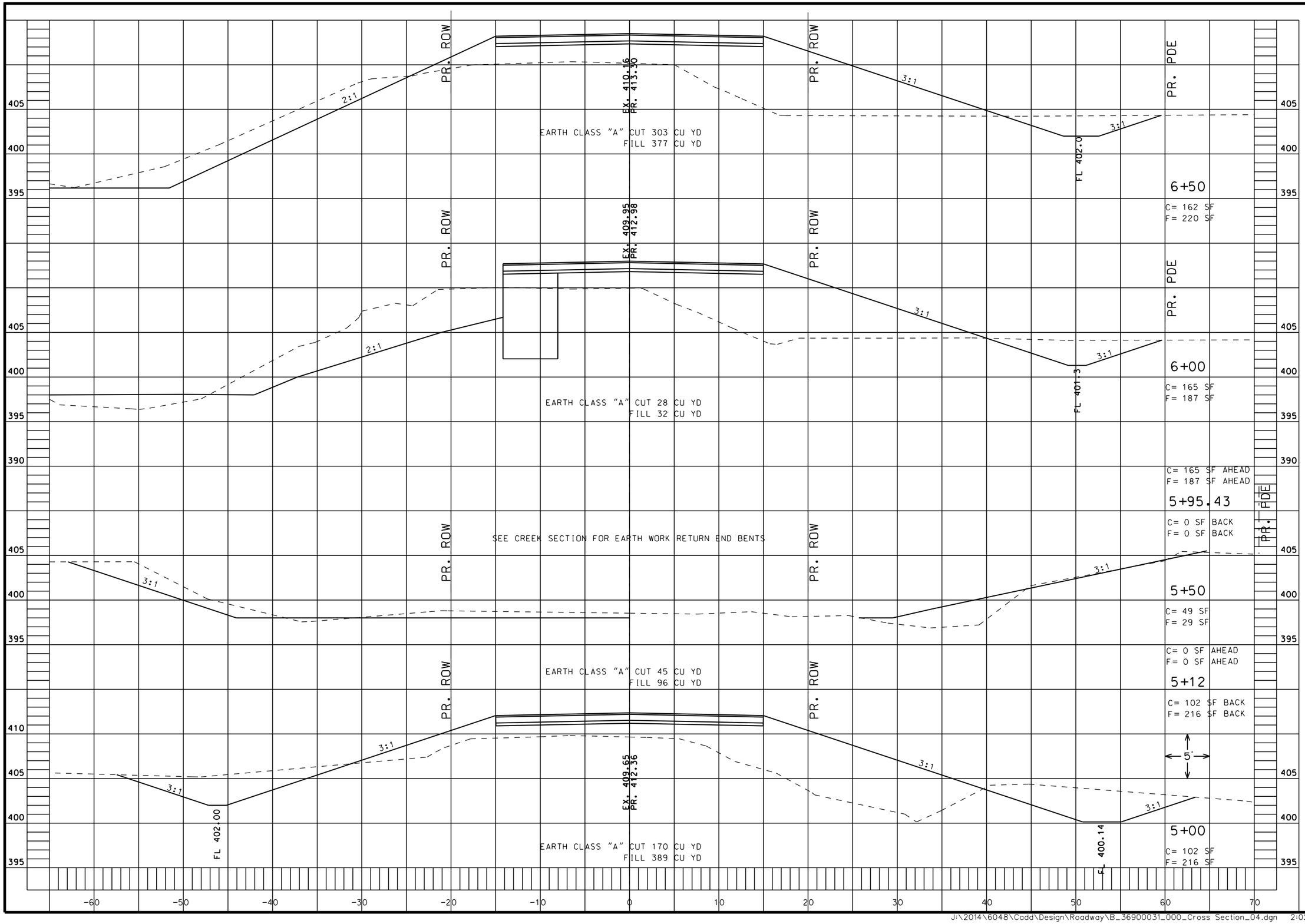

STATE OF MISSOURI
STEPHEN M. SEELY
NUMBER
E-24698
REGISTERED PROFESSIONAL ENGINEER

DATE PREPARED	2/3/2017
STATE	MO
SHEET NO.	44
ROUTE	BIG HOLLOW
COUNTY	JEFFERSON
JOB NO.	14-6048
PROJECT NO.	STP-9900 (646)
BRIDGE NO.	36900031

DATE	DESCRIPTION

IF A SEAL IS PRESENT ON THIS SHEET IT HAS BEEN ELECTRONICALLY SEALED AND DATED.

JEFFERSON COUNTY PUBLIC WORKS
DEPARTMENT

P.O. BOX 100
HILLSBORO, MO 63050
(636-797-5340) PHONE
(636-797-5565) FAX

ABNA
4140 LINDELL BOULEVARD
ST. LOUIS, MO 63108
PH. 314-454-0222
CERTIFICATE/LICENSE NO. 001501

J:\2014\6048\Cadd\Design\Roadway\B_36900031_000_Cross Section_04.dgn 2:02:40 PM 2/3/2017

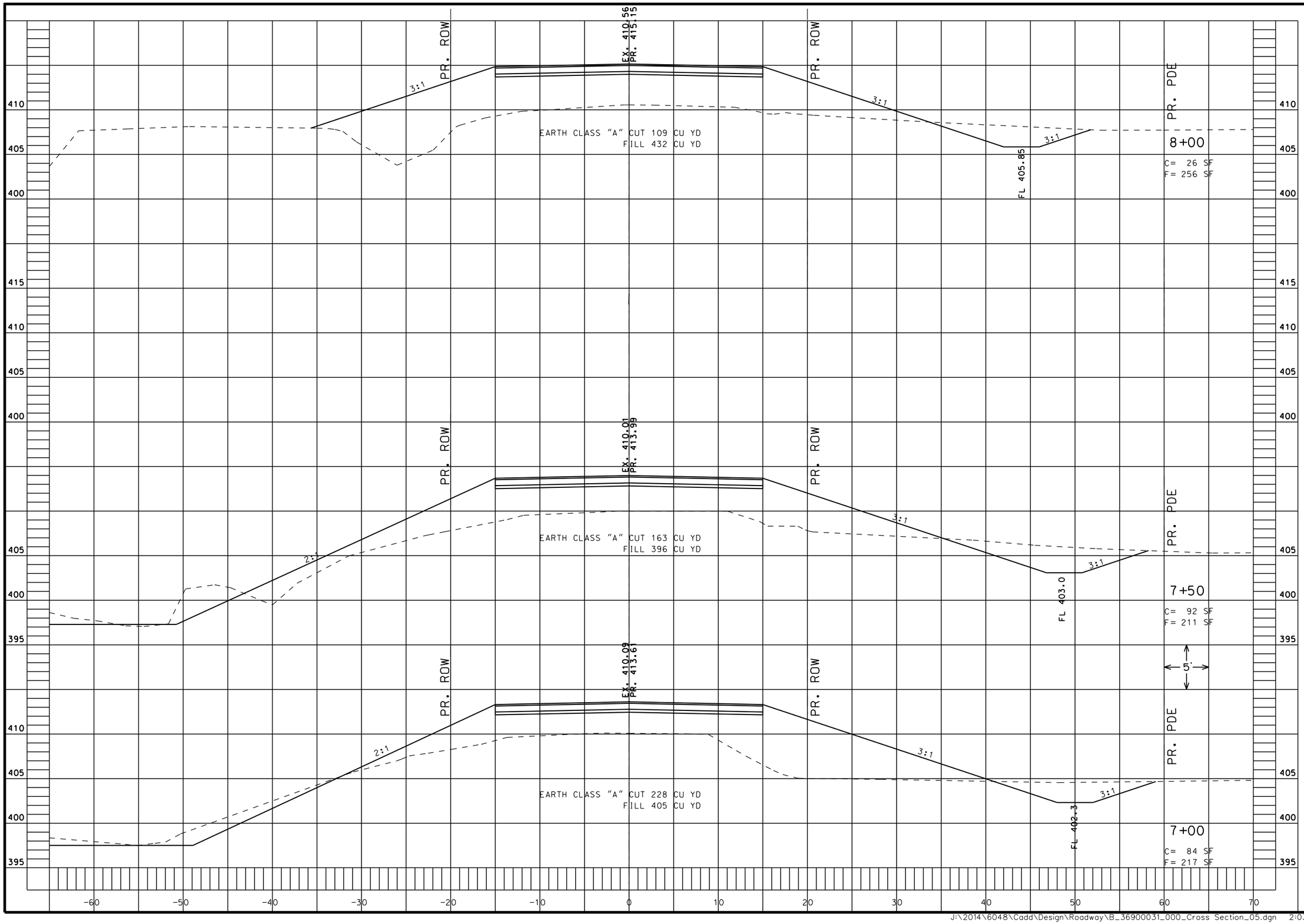

STATE OF MISSOURI
STEPHEN M. SEELY
NUMBER E-24698
REGISTERED PROFESSIONAL ENGINEER

DATE PREPARED	2/3/2017
STATE	MO
SHEET NO.	45
ROUTE	BIG HOLLOW
COUNTY	JEFFERSON
JOB NO.	14-6048
PROJECT NO.	STP-9900 (646)
BRIDGE NO.	36900031

DATE	DESCRIPTION

IF A SEAL IS PRESENT ON THIS SHEET IT HAS BEEN ELECTRONICALLY SEALED AND DATED.

JEFFERSON COUNTY PUBLIC WORKS
DEPARTMENT

P.O. BOX 100
HILLSBORO, MO 63050
(636-797-5340) PHONE
(636-797-5565) FAX

ABNA
4140 LINDELL BOULEVARD
ST. LOUIS, MO 63108
PH. 314-454-0222
CERTIFICATE/LICENSE NO. 001501

J:\2014\6048\Cadd\Design\Roadway\B_36900031_000_Cross Section_05.dgn 2:03:24 PM 2/3/2017

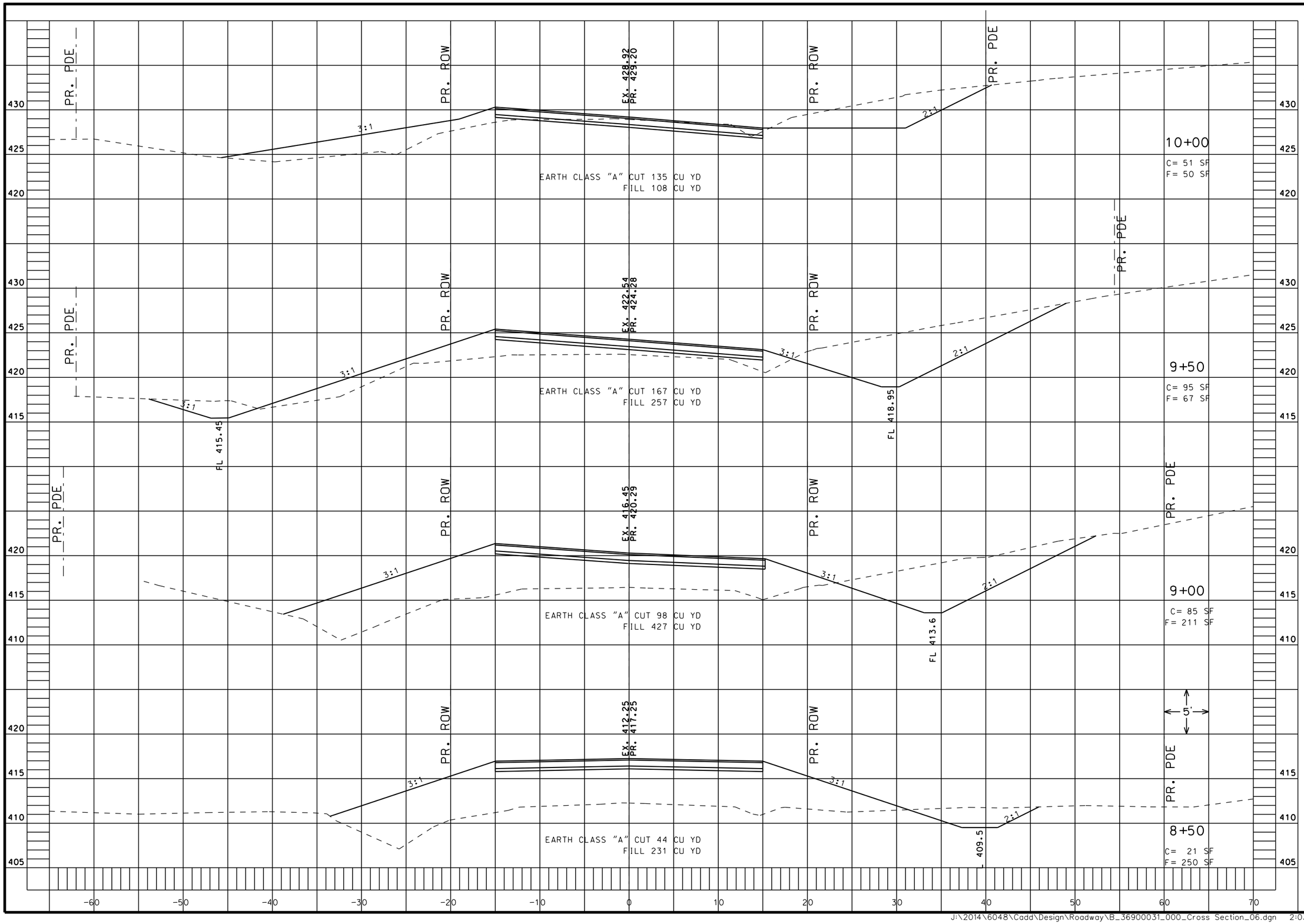

STATE OF MISSOURI
STEPHEN M. SEWELL
NUMBER E-24698
REGISTERED PROFESSIONAL ENGINEER

DATE PREPARED	2/3/2017
STATE	MO
SHEET NO.	46
ROUTE	BIG HOLLOW
COUNTY	JEFFERSON
JOB NO.	14-6048
PROJECT NO.	STP-9900 (646)
BRIDGE NO.	36900031

DESCRIPTION

DATE

IF A SEAL IS PRESENT ON THIS SHEET IT HAS BEEN ELECTRONICALLY SEALED AND DATED.

JEFFERSON COUNTY PUBLIC WORKS
DEPARTMENT

P.O. BOX 100
HILLSBORO, MO 63050
(636-797-5340) PHONE
(636-797-5565) FAX

JEFFERSON COUNTY MISSOURI
ESTABLISHED 1818

ABNA
4140 LINDELL BOULEVARD
ST. LOUIS, MO 63108
PH. 314-454-0222
CERTIFICATE/LICENSE NO. 001501

J:\2014\6048\Cadd\Design\Roadway\B_36900031_000_Cross Section_06.dgn 2:03:57 PM 2/3/2017

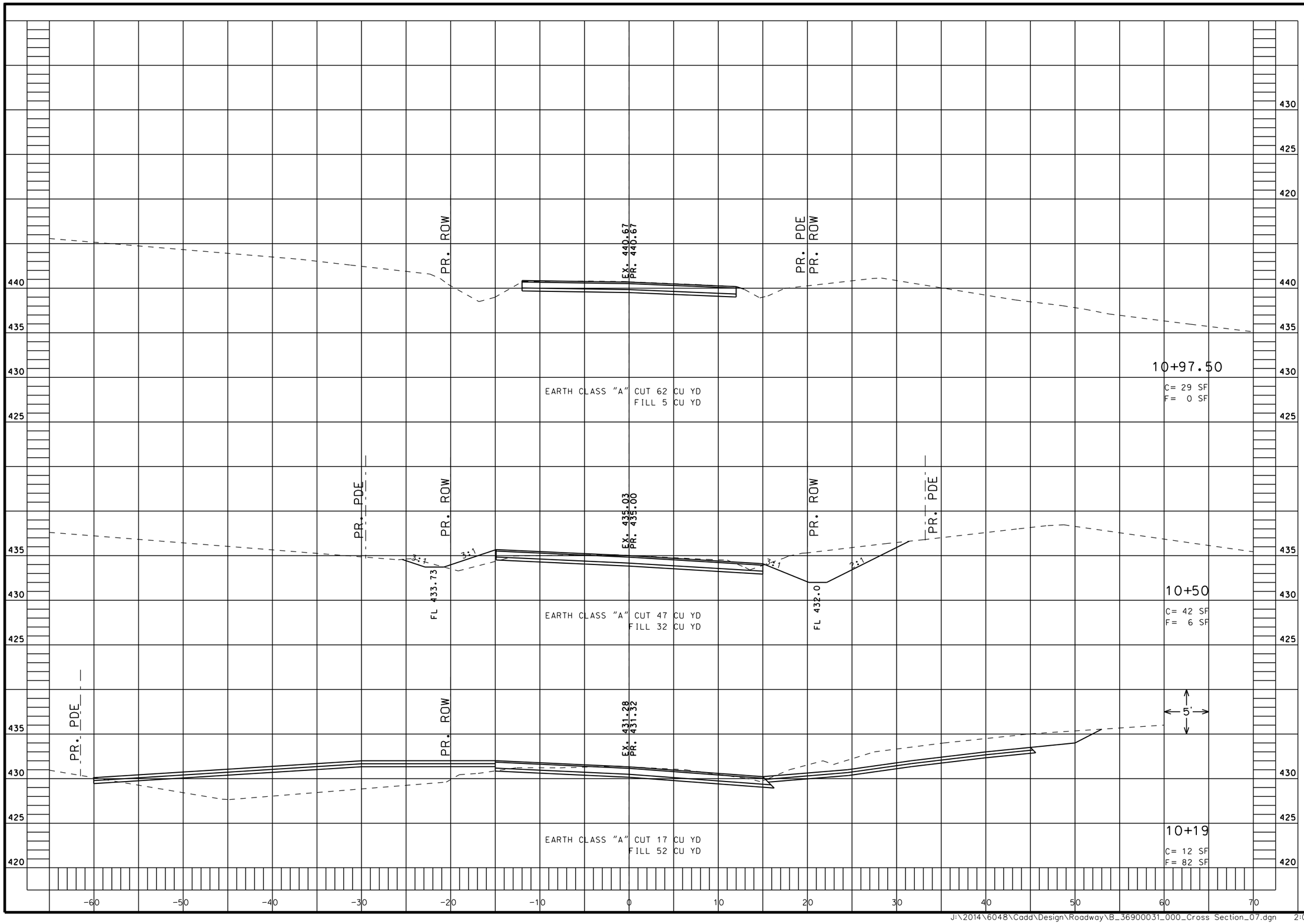

STATE OF MISSOURI
STEPHEN M. SEIBERT
NUMBER E-24698
REGISTERED PROFESSIONAL ENGINEER

DATE PREPARED	2/3/2017
STATE	MO
SHEET NO.	47
ROUTE	BIG HOLLOW
COUNTY	JEFFERSON
JOB NO.	14-6048
PROJECT NO.	STP-9900 (646)
BRIDGE NO.	36900031

DESCRIPTION

DATE

IF A SEAL IS PRESENT ON THIS SHEET IT HAS BEEN ELECTRONICALLY SEALED AND DATED.

JEFFERSON COUNTY PUBLIC WORKS
DEPARTMENT

P.O. BOX 100
HILLSBORO, MO 63050
(636-797-5340) PHONE
(636-797-5565) FAX

ABNA
4140 LINDELL BOULEVARD
ST. LOUIS, MO 63108
PH. 314-454-0222
CERTIFICATE/LICENSE NO. 001501