JEFFERSON COUNTY PUBLIC WORKS DEPARTMENT
PLANS FOR PROPOSED
COUNTY ROAD
OLD STATE ROUTE 21
PHASE 1 IMPROVEMENTS

DESIGN DESIGNATION

A.A.D.T. - 2015 = 6565
A.A.D.T. - 2035 = 9755
D.H.V. = 10%
T = 9%
V = 50 M.P.H.
D = 50%

FUNCTIONAL CLASSIFICATION - MINOR ARTERIAL

UTILITIES

ELECTRIC - AMEREN MISSOURI
WILLIAM ROSENER
6450 HIGHWAY MM
HOUSE SPRINGS, MO 63051
OFFICE: 636-671-6162

TELEPHONE - AT&T
GLENN HOGENMILLER
122 NORTH 2ND STREET
FESTUS, MO 63028
OFFICE: 636-931-7525

CABLE - CHARTER
DARYL STEFFEN
815 CHARTER COMMUNICATIONS DRIVE
TOWN & COUNTRY, MO 63017
OFFICE: 636-387-6663

GAS - LACLEDE
BRIAN LANGENBACHER
411B SHREWSBURY AVENUE
SHREWSBURY, MO 63119
OFFICE: 314-768-7767

SEWER - ROCK CREEK
JASON SIEGER
4133 WEST OUTER ROAD
ARNOLD, MO 63010
OFFICE: 636-464-3305

PUBLIC WATER SUPPLY DISTRICT #3
pwsd3jb2@yahoo.com
1469 OLD STATE ROUTE 21
ARNOLD, MO 63026
OFFICE: 636-296-7053

CONVENTIONAL SYMBOLS
(USED IN PLANS)

	EXISTING	NEW
BUILDINGS AND STRUCTURES		
GUARD RAIL		
CONCRETE RIGHT-OF-WAY MARKER		
STEEL RIGHT-OF-WAY MARKER		
LOCATION SURVEY MARKER		
UTILITIES		
FIBER OPTICS	-FO-	-FO-
OVERHEAD TELEPHONE		
UNDERGROUND TELEPHONE	-T-	-T-
OVERHEAD POWER		
UNDERGROUND POWER	-P-	-P-
GAS	-G-	-G-
WATER	-W-	-W-
MANHOLE	SAN	
FIRE HYDRANT	HYD	
WATER VALVE	WV	
WATER METER	WM	
DROP INLET	D	
DITCH BLOCK		
GROUND MOUNTED SIGN	SIGN	
LIGHT POLE		
H-FRAME POWER POLE		
TELEPHONE PEDESTAL	PED	
FENCE		
CHAIN LINK	-V-	
WOVEN WIRE	-X-	
GATE POST		
BENCHMARK	BM	
LEAVE IN PLACE	(LIP)	
TO BE REMOVED	(R)	
TO BE REMOVED & RELOCATED	(TBR&R)	
USE IN PLACE	(UIP)	

NOTE: DASHED OR OPEN SYMBOLS INDICATE EXISTING FEATURES

APPROVED BY:

JASON JONAS, P.E.
DIRECTOR OF PUBLIC WORKS

2/2/16
DATE

INDEX OF SHEETS

DESCRIPTION	SHEET NUMBER
TITLE SHEET	1
TYPICAL SECTIONS (TS) (2 SHEETS)	2
QUANTITIES (QU) (11 SHEETS)	3
PLAN-PROFILE (PP)	4-39
TRAFFIC CONTROL SHEETS (TC)	40-43

LENGTH OF PROJECT

BEGINNING OF PROJECT	STA. 755 + 00.00	
END OF PROJECT	STA. 945 + 15.00	
APPARENT LENGTH	19,015.00	
EQUATIONS AND EXCEPTIONS:		
STA. 773 + 13.17 BK STA. 773 + 13.73 AHD	-0.56	FEET
STA. 785 + 04.55 BK STA. 785 + 10.86 AHD	-6.31	FEET
STA. 788 + 04.00 BK STA. 788 + 00.00 AHD	4.00	FEET
STA. 827 + 86.17 BK STA. 824 + 91.27 AHD	294.90	FEET
STA. 841 + 00.00 STA. 849 + 50.00	-850.00	FEET
STA. 854 + 40.30 BK STA. 854 + 45.68 AHD	-5.38	FEET
STA. 860 + 77.00 BK STA. 860 + 75.60 AHD	1.40	FEET
STA. 869 + 00.00 STA. 886 + 90.00	-1790.00	FEET
STA. 886 + 90.00 STA. 894 + 93.00	-803.00	FEET
STA. 896 + 34.98 BK STA. 896 + 01.39 AHD	33.59	FEET
STA. 912 + 53.74 BK STA. 912 + 66.58 AHD	-12.84	FEET
STA. 934 + 78.09 BK STA. 934 + 62.38 AHD	15.71	FEET
STA. 943 + 45.75 BK STA. 943 + 58.22 AHD	-12.47	FEET
TOTAL CORRECTIONS	-3130.96	FEET
NET LENGTH OF PROJECT	15,884.04	FEET
LENGTH OF PROJECT	3.008	MILES

STATE OF MISSOURI
RICHARD S. BAUM
NUMBER E-24320
PROFESSIONAL ENGINEER

DATE PREPARED	03-NOV-2016
ROUTE	21
STATE	MO
DISTRICT	SL
SHEET NO.	1
COUNTY	JEFFERSON
JOB NO.	PW17039RDW
CONTRACT ID.	
PROJECT NO.	
BRIDGE NO.	

DATE	DESCRIPTION

JEFFERSON COUNTY
PUBLIC WORKS DEPARTMENT
P.O. BOX 100
HILLSBORO, MO 63050
(636-797-5340)
www.jeffcomo.org

JACOBS
JACOBS ENGINEERING GROUP
1000 ROBIDOUX ROW, BOOK 2
ST. LOUIS, MISSOURI 63102-2121
(314) 421-3960 FAX (314) 421-3960
CERTIFICATE OF AUTHORITY
#00704

NOTE:

1. PLANT MIX BITUMINOUS PAVEMENT (BP-1) QUANTITY BASED UPON 1.929 TONS/CU. YD. COMPACTED MIXTURE
2. PLANT MIX BITUMINOUS BASE QUANTITY BASED UPON 1.931 TONS/CU. YD. COMPACTED MIXTURE
3. TACK COAT QUANTITY BASED UPON 0.08 GALLONS/SQ. YD.
4. PRIME COAT QUANTITY BASED UPON 0.45 GALLONS/SQ. YD.

✱ SEE PLANS FOR LOCATIONS WHERE SHOULDER WIDTH VARIES

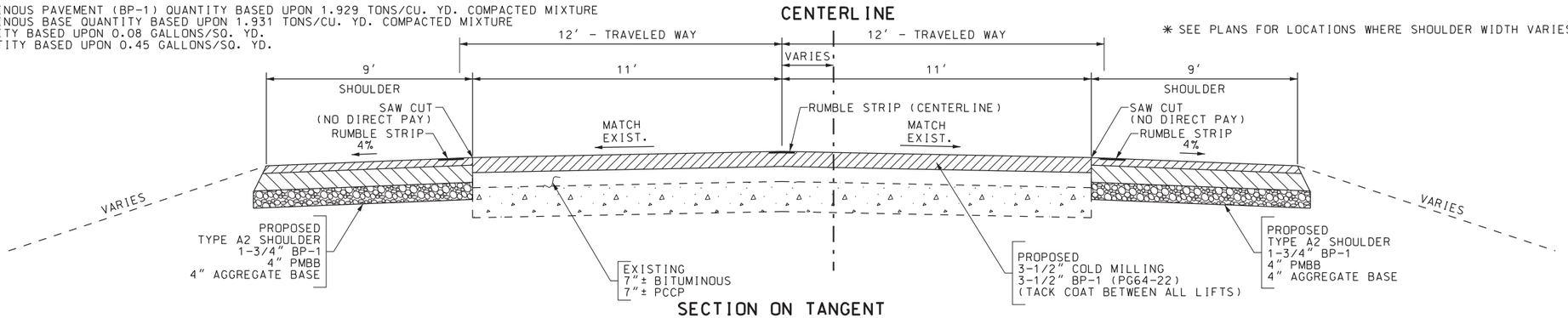

SECTION ON TANGENT

TYPICAL SECTION OLD STATE ROUTE 21

STA. 755+00.00 TO STA. 762+12.98
STA. 773+13.73 TO STA. 776+78.68
STA. 785+10.86 TO STA. 815+68.78
STA. 827+42.80 TO STA. 841+00.00
STA. 854+45.68 TO STA. 869+00.00
STA. 896+01.39 TO STA. 896+26.29
STA. 912+66.58 TO STA. 927+71.93
STA. 934+62.38 TO STA. 936+45.59
STA. 943+58.22 TO STA. 944+46.00
STA. 945+08.00 TO STA. 945+15.00

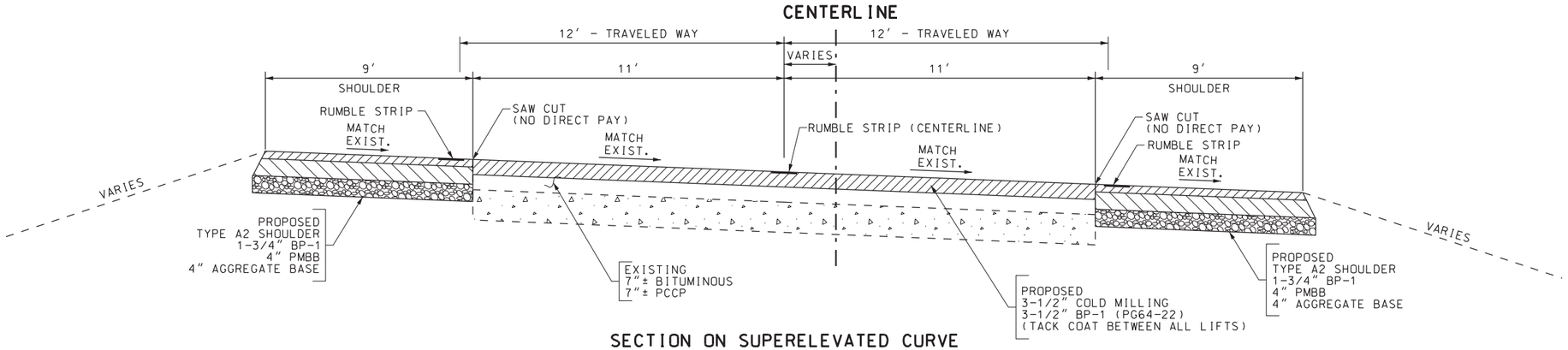

SECTION ON SUPERELEVATED CURVE

TYPICAL SECTION OLD STATE ROUTE 21

STA. 762+12.98 TO STA. 773+13.73
STA. 776+78.68 TO STA. 785+10.86
STA. 815+68.78 TO STA. 827+42.80
STA. 849+50.00 TO STA. 854+45.68
STA. 894+93.00 TO STA. 896+01.39
STA. 896+26.29 TO STA. 912+66.58
STA. 927+71.93 TO STA. 934+62.38
STA. 936+45.59 TO STA. 943+58.22

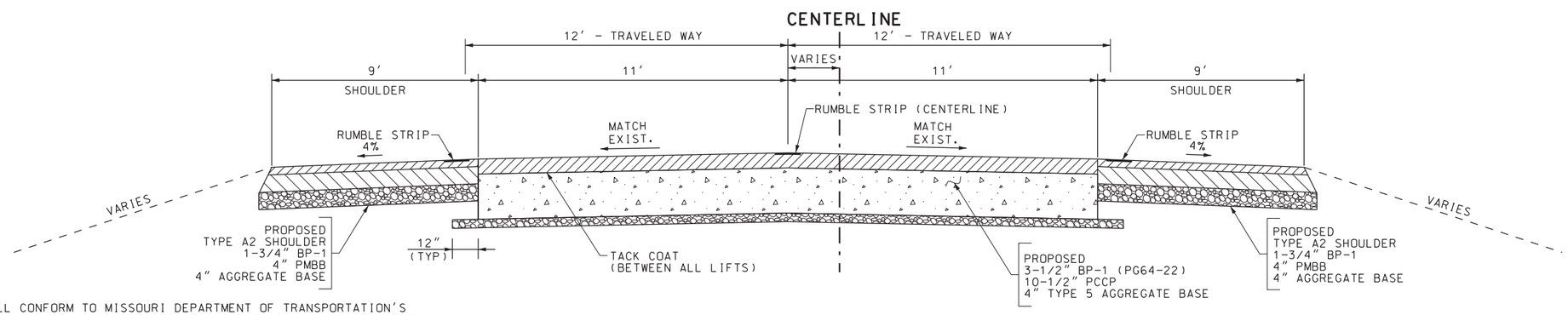

SECTION ON TANGENT

TYPICAL SECTION OLD STATE ROUTE 21

STA. 944+46.00 TO STA. 945+08.00

NOTES:

1. ALL WORK SHALL CONFORM TO MISSOURI DEPARTMENT OF TRANSPORTATION'S STANDARD PLANS AND STANDARD SPECIFICATIONS FOR HIGHWAY CONSTRUCTION.
2. CONTRACTOR SHALL FIELD VERIFY LOCATIONS OF EXISTING PAVEMENT STRUCTURE PRIOR TO SAW CUT.
3. SEE MISSOURI DEPARTMENT OF TRANSPORTATION'S STANDARD PLAN 620.00 FOR PAVEMENT MARKING DETAILS AND TYPICAL SECTIONS SHEET 2 - PAVEMENT EDGE DETAIL.
4. SEE MISSOURI DEPARTMENT OF TRANSPORTATION'S STANDARD PLAN 626.00 FOR RUMBLE STRIP DETAILS AND TYPICAL SECTIONS SHEET 2 - PAVEMENT EDGE DETAIL.

NOTE:
CONCRETE PAVEMENT SHALL BE DOWELED TO ADJOINING EXISTING CONCRETE PAVEMENT. SEE MISSOURI DEPARTMENT OF TRANSPORTATION'S STANDARD PLAN 613.00P FOR ADDITIONAL INFORMATION (DOWEL SIZE, SPACING, DIMENSIONS, ETC.)

TYPICAL SECTIONS
SHEET 1 OF 2

STATE OF MISSOURI
RICHARD S. BAUM
NUMBER E-24320
PROFESSIONAL ENGINEER

DATE PREPARED	03-NOV-2016
ROUTE	21
STATE	MO
DISTRICT	SL
SHEET NO.	2
COUNTY	JEFFERSON
JOB NO.	PW17039RDW
CONTRACT ID.	
PROJECT NO.	
BRIDGE NO.	

DATE	DESCRIPTION

JEFFERSON COUNTY
PUBLIC WORKS DEPARTMENT
P.O. BOX 100
HILLSBORO, MO 63050
(636-797-5340)
www.jeffcomo.org

JACOBS ENGINEERING GROUP INC.
ST. LOUIS, MISSOURI
PHONE
CERTIFICATE OF AUTHORITY

NOTES:

1. ALL WORK SHALL CONFORM TO MISSOURI DEPARTMENT OF TRANSPORTATION'S STANDARD PLANS AND STANDARD SPECIFICATIONS FOR HIGHWAY CONSTRUCTION.
2. CONTRACTOR SHALL FIELD VERIFY LOCATIONS OF EXISTING PAVEMENT STRUCTURE PRIOR TO SAW CUT.

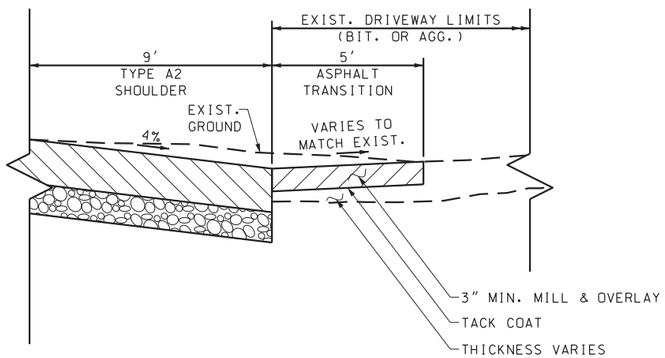

NOTES:

1. THE CONSTRUCTION OF THE ASPHALT TRANSITION SHALL REQUIRE REMOVAL OF SUFFICIENT MATERIAL TO CONSTRUCT A MINIMUM THREE (3") INCH THICK ASPHALT LAYER.
2. REMOVAL OF SUFFICIENT MATERIAL MAY EXCEED OR MAY BE LESS THAN THREE (3") INCHES IN THICKNESS DEPENDING ON GRADE OF EXISTING DRIVEWAY AND CONSTRUCTION OF NEW TYPE A2 SHOULDER.
3. ASPHALT TRANSITION SHALL BE CONSTRUCTED USING PLANT MIX BITUMINOUS BASE.

ASPHALT TRANSITION DETAIL

N.T.S.

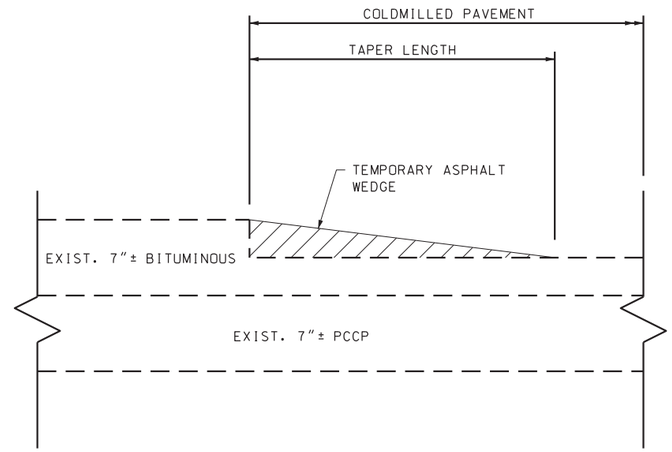

NOTES:

1. THE TAPER LENGTH SHALL BE 3 FT. IN LENGTH FOR EVERY 1 INCH OF THICKNESS FOR SHORT TERM OPERATION (LESS THAT 7 CALENDAR DAYS).
2. THE TAPER LENGTH SHALL BE 5 FT. IN LENGTH FOR EVERY 1 INCH OF THICKNESS FOR TEMPORARY OPERATION (IN PLACE OVER 7 CALENDAR DAYS).
3. THE COST TO PROVIDE AND PLACE TEMPORARY ASPHALT SHALL BE CONSIDERED INCIDENTAL AND INCLUDED IN OTHER ITEMS.
4. THE CONTRACTOR SHALL ERECT BUMP (W08-1) SIGNS FACING EACH DIRECTION OF TRAFFIC AT ALL LOCATIONS WHERE THE TEMPORARY TRANSVERSE ASPHALT TAPERS ARE USED.

TEMPORARY TRANSVERSE ASPHALT TAPER

N.T.S.

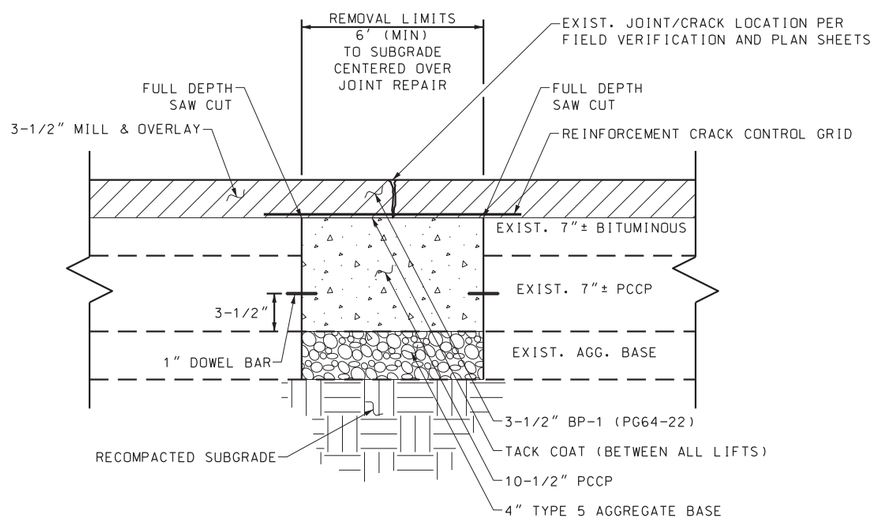

NOTES:

1. SEE MISSOURI DEPARTMENT OF TRANSPORTATION'S STANDARD PLAN 613.00 FOR ADDITIONAL INFORMATION.
2. SEE PLANS FOR LOCATIONS OF FULL DEPTH JOINT REPAIR.

FULL DEPTH JOINT REPAIR DETAIL

N.T.S.

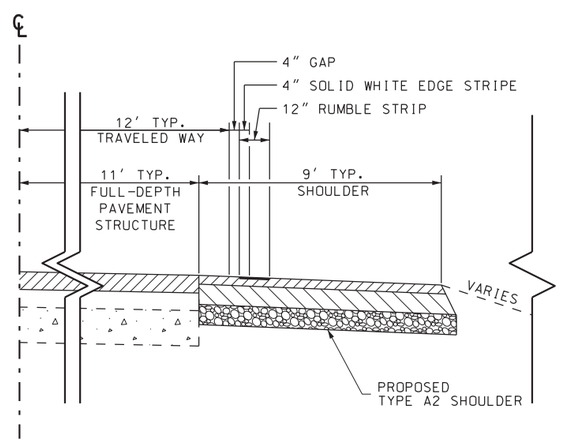

PAVEMENT EDGE DETAIL

N.T.S.

TYPICAL SECTIONS
SHEET 2 OF 2

STATE OF MISSOURI
RICHARD S. BAUM
NUMBER E-24320
REGISTERED PROFESSIONAL ENGINEER

DATE PREPARED	
03-NOV-2016	
ROUTE 21	STATE MO
DISTRICT SL	SHEET NO. 2
COUNTY JEFFERSON	
JOB NO. PW17039RDW	
CONTRACT ID.	
PROJECT NO.	
BRIDGE NO.	

DATE	DESCRIPTION

JEFFERSON COUNTY
PUBLIC WORKS DEPARTMENT
P.O. BOX 100
HILLSBORO, MO 63050
(636-797-5340)
www.jeffcomo.org

JACOBS ENGINEERING GROUP INC.
ST. LOUIS, MO
PHONE
CERTIFICATE OF AUTHORITY

MISSOURI HIGHWAYS AND TRANSPORTATION COMMISSION

SUMMARY OF QUANTITIES

REMOVAL OF IMPROVEMENTS				
SHEET	STATION	STATION	LOCATION	DESCRIPTION
7	770+01		OLD ROUTE 21, LT & RT	14.7 SY CONC PVM'T
7	771+02		OLD ROUTE 21, LT & RT	14.7 SY CONC PVM'T
8	773+53		OLD ROUTE 21, LT & RT	14.7 SY CONC PVM'T
8	774+51		OLD ROUTE 21, LT & RT	14.7 SY CONC PVM'T
8	775+18		OLD ROUTE 21, LT & RT	14.7 SY CONC PVM'T
8	776+32		OLD ROUTE 21, LT & RT	14.7 SY CONC PVM'T
8	776+72		OLD ROUTE 21, LT & RT	14.7 SY CONC PVM'T
10	782+02		OLD ROUTE 21, LT	MAILBOX
12	791+50		OLD ROUTE 21, LT	MAILBOX
13	798+06		OLD ROUTE 21, LT & RT	14.7 SY CONC PVM'T
13	798+50		OLD ROUTE 21, LT	MAILBOX
13	798+50		OLD ROUTE 21, LT	MAILBOX
14	802+50		OLD ROUTE 21, LT	MAILBOX
14	803+58		OLD ROUTE 21, LT & RT	14.7 SY CONC PVM'T
15	805+55		OLD ROUTE 21, LT & RT	14.7 SY CONC PVM'T
15	806+05		OLD ROUTE 21, LT & RT	14.7 SY CONC PVM'T
15	808+56		OLD ROUTE 21, LT & RT	14.7 SY CONC PVM'T
16	810+56		OLD ROUTE 21, LT & RT	14.7 SY CONC PVM'T
16	811+07		OLD ROUTE 21, LT & RT	14.7 SY CONC PVM'T
16	811+57		OLD ROUTE 21, LT & RT	14.7 SY CONC PVM'T
16	812+25		OLD ROUTE 21, LT & RT	14.7 SY CONC PVM'T
18	819+53		OLD ROUTE 21, LT & RT	14.7 SY CONC PVM'T
18	820+03		OLD ROUTE 21, LT & RT	14.7 SY CONC PVM'T
18	822+18	822+50	OLD ROUTE 21, RT	32.0 LF GUARDRAIL
19	822+50	826+09	OLD ROUTE 21, RT	359.0 LF GUARDRAIL
19	823+45	827+00	OLD ROUTE 21, LT	355.0 LF GUARDRAIL
20	827+00	827+30	OLD ROUTE 21, LT	30.0 LF GUARDRAIL
20	827+23		OLD ROUTE 21, RT	MAILBOX
20	825+40		OLD ROUTE 21, RT	MAILBOX
20	826+55		OLD ROUTE 21, LT & RT	14.7 SY CONC PVM'T
20	827+55		OLD ROUTE 21, LT & RT	14.7 SY CONC PVM'T
20	827+98		OLD ROUTE 21, LT	MAILBOX
21	829+30		OLD ROUTE 21, RT	MAILBOX
22	836+06		OLD ROUTE 21, LT & RT	14.7 SY CONC PVM'T
23	838+07		OLD ROUTE 21, LT & RT	14.7 SY CONC PVM'T

REMOVAL OF IMPROVEMENTS				
SHEET	STATION	STATION	LOCATION	DESCRIPTION
25	855+32		OLD ROUTE 21, LT	7.3 SY CONC PVM'T
25	856+31		OLD ROUTE 21, LT	7.3 SY CONC PVM'T
25	856+80		OLD ROUTE 21, RT	MAILBOX
29	894+85	896+22	OLD ROUTE 21, RT	137.0 LF GUARDRAIL
30	899+80		OLD ROUTE 21, LT	MAILBOX
34	917+64		OLD ROUTE 21, LT & RT	14.7 SY CONC PVM'T
34	919+14		OLD ROUTE 21, LT & RT	14.7 SY CONC PVM'T
34	920+65		OLD ROUTE 21, LT & RT	14.7 SY CONC PVM'T
35	922+14		OLD ROUTE 21, LT & RT	14.7 SY CONC PVM'T
35	923+14		OLD ROUTE 21, LT & RT	14.7 SY CONC PVM'T
35	923+65		OLD ROUTE 21, LT & RT	14.7 SY CONC PVM'T
35	925+14		OLD ROUTE 21, RT	7.3 SY CONC PVM'T
36	928+15		OLD ROUTE 21, LT & RT	14.7 SY CONC PVM'T
36	929+14		OLD ROUTE 21, LT & RT	14.7 SY CONC PVM'T
36	929+64		OLD ROUTE 21, LT & RT	14.7 SY CONC PVM'T
36	930+14		OLD ROUTE 21, LT & RT	14.7 SY CONC PVM'T
37	931+65		OLD ROUTE 21, LT & RT	14.7 SY CONC PVM'T
37	932+32		OLD ROUTE 21, LT & RT	14.7 SY CONC PVM'T
37	933+45		OLD ROUTE 21, LT	MAILBOX
37	934+10		OLD ROUTE 21, RT	MAILBOX
38	936+41		OLD ROUTE 21, LT & RT	14.7 SY CONC PVM'T
38	937+42		OLD ROUTE 21, LT & RT	14.7 SY CONC PVM'T
38	938+41		OLD ROUTE 21, LT & RT	14.7 SY CONC PVM'T
38	938+92		OLD ROUTE 21, LT & RT	14.7 SY CONC PVM'T
38	939+05		OLD ROUTE 21, LT	MAILBOX
38	939+91		OLD ROUTE 21, LT & RT	14.7 SY CONC PVM'T
39	940+20		OLD ROUTE 21, LT	MAILBOX
39	940+91		OLD ROUTE 21, LT & RT	14.7 SY CONC PVM'T
39	941+33		OLD ROUTE 21, LT	MAILBOX
39	941+91		OLD ROUTE 21, LT & RT	14.7 SY CONC PVM'T
39	942+97		OLD ROUTE 21, LT & RT	14.7 SY CONC PVM'T
39	943+60		OLD ROUTE 21, LT	MAILBOX
39	944+10		OLD ROUTE 21, LT & RT	14.7 SY CONC PVM'T
39	943+92		OLD ROUTE 21, RT	MAILBOX
39	944+46	945+08	OLD ROUTE 21, LT & RT	151.6 SY CONC PVM'T
39	944+50		OLD ROUTE 21, RT	MAILBOX
			TOTAL	1 LUMP SUM

MOBILIZATION	
TOTAL	1 LUMP SUM

2B

REGISTERED PROFESSIONAL ENGINEER
STATE OF MISSOURI
RICHARD S. BAUM
NUMBER E-24320

DATE PREPARED
03-NOV-2016

ROUTE	STATE
21	MO
DISTRICT	SHEET NO.
SL	3

COUNTY
JEFFERSON

JOB NO.
PW17039RDW

CONTRACT ID.

PROJECT NO.

BRIDGE NO.

DATE	DESCRIPTION

JEFFERSON COUNTY
PUBLIC WORKS DEPARTMENT
P.O. BOX 100
HILLSBORO, MO 63050
(636-797-5340)
www.jeffcomo.org

JACOBS ENGINEERING GROUP INC.
701 NORTH 15TH STREET
ST. LOUIS, MO 63103
PHONE: 314-335-4800
CERTIFICATE OF AUTHORITY NO. E-2001000163

MISSOURI HIGHWAYS AND TRANSPORTATION COMMISSION

2B

SUMMARY OF QUANTITIES

PAVEMENT QUANTITIES							
SHEET	STATION	STATION	LOCATION	COLD MILLING	BITUMINOUS PAVEMENT MIXTURE PG64-22 (BP-1)	TACK COAT	TYPE A2 SHOULDER
				SY	TON	GAL	SY
4	755+00	759+50	OLD ROUTE 21, LT & RT	1100	206.3	176	900.0
5	759+50	764+00	OLD ROUTE 21, LT & RT	1100	206.3	176	900.0
6	764+00	768+50	OLD ROUTE 21, LT & RT	1100	206.3	176	900.0
7	768+50	773+00	OLD ROUTE 21, LT & RT	1100	206.3	176	900.0
8	773+00	773+13	OLD ROUTE 21, LT & RT	32	6.0	6	26.0
8	773+14	775+28	OLD ROUTE 21, LT				214.0
8	776+52	777+50	OLD ROUTE 21, LT				98.0
8	773+14	777+50	OLD ROUTE 21	1066	199.9	170	
8	773+14	777+50	OLD ROUTE 21, RT				436.0
9	777+50	782+00	OLD ROUTE 21, LT & RT	1100	206.3	176	900.0
10	782+00	785+05	OLD ROUTE 21, LT & RT	746	139.8	120	610.0
10	785+11	786+50	OLD ROUTE 21, LT & RT	340	63.7	54	278.0
11	786+50	788+04	OLD ROUTE 21, LT & RT	376	70.6	60	308.0
11	788+00	791+00	OLD ROUTE 21, LT & RT	733	137.5	118	600.0
12	791+00	795+50	OLD ROUTE 21, LT & RT	1100	206.3	176	900.0
13	795+50	800+00	OLD ROUTE 21, LT & RT	1100	206.3	176	900.0
14	800+00	804+50	OLD ROUTE 21, LT & RT	1100	206.3	176	900.0
15	804+50	809+00	OLD ROUTE 21, LT & RT	1100	206.3	176	900.0
16	809+00	812+46	OLD ROUTE 21	846	158.6	136	
16	809+00	811+38	OLD ROUTE 21, LT & RT				476.0
17	814+70	818+00	OLD ROUTE 21	918	172.1	146	
17	815+74	818+00	OLD ROUTE 21, RT				226.0
17	816+11	818+00	OLD ROUTE 21, LT				189.0
18	818+00	822+50	OLD ROUTE 21, LT & RT	1100	206.3	176	900.0
19	822+50	827+00	OLD ROUTE 21	1241	233.0	198	
19	822+50	822+75	OLD ROUTE 21, LT				25.0
19	823+37	827+00	OLD ROUTE 21, LT				363.0
19	822+50	826+16	OLD ROUTE 21, RT				366.0
19	826+95	827+00	OLD ROUTE 21, RT				5.0
20	827+00	827+86	OLD ROUTE 21, LT & RT	210	39.4	34	172.0
20	824+91	828+50	OLD ROUTE 21, LT & RT	878	164.6	140	718.0
21	828+50	833+00	OLD ROUTE 21, LT & RT	1100	206.3	176	900.0
22	833+00	837+50	OLD ROUTE 21	1100	206.3	176	
22	833+00	837+50	OLD ROUTE 21, LT				450.0
22	833+00	835+98	OLD ROUTE 21, RT				298.0
22	837+08	837+50	OLD ROUTE 21, RT				42.0
			SHEET SUBTOTAL	20.586	3860.8	3294	15.800.0

STATE OF MISSOURI
RICHARD S. BAUM
NUMBER E-24320
REGISTERED PROFESSIONAL ENGINEER

DATE PREPARED
03-NOV-2016

ROUTE	STATE
21	MO
DISTRICT	SHEET NO.
SL	3

COUNTY
JEFFERSON

JOB NO.
PW17039RDW

CONTRACT ID.

PROJECT NO.

BRIDGE NO.

DATE	DESCRIPTION

JEFFERSON COUNTY
PUBLIC WORKS DEPARTMENT

P.O. BOX 100
HILLSBORO, MO 63050
(636-797-5340)
www.jeffcomo.org

JACOBS ENGINEERING GROUP INC.
701 N. 15TH STREET
ST. LOUIS, MO 63103
PHONE: 314-335-4800
CERTIFICATE OF AUTHORITY NUMBER: E-2001000165

MISSOURI HIGHWAYS AND TRANSPORTATION COMMISSION

SUMMARY OF QUANTITIES

PAVEMENT QUANTITIES							
SHEET	STATION	STATION	LOCATION	COLD MILLING	BITUMINOUS PAVEMENT MIXTURE PG64-22 (BP-1)	TACK COAT	TYPE A2 SHOULDER
				SY	TON	GAL	SY
23	837+50	841+00	OLD ROUTE 21, LT & RT	856	160.5	136	700.0
24	849+50	854+00	OLD ROUTE 21, LT & RT	1100	206.3	176	900.0
25	854+00	854+40	OLD ROUTE 21, LT & RT	98	18.3	16	80.0
25	854+46	858+50	OLD ROUTE 21, LT & RT	988	185.2	158	808.0
26	858+50	860+77	OLD ROUTE 21, LT & RT	555	104.1	88	454.0
26	860+76	863+00	OLD ROUTE 21, LT & RT	548	102.7	88	448.0
27	863+00	867+50	OLD ROUTE 21, LT & RT	1100	206.3	176	900.0
28	867+50	869+00	OLD ROUTE 21, LT & RT	367	68.8	58	300.0
29	894+93	896+35	OLD ROUTE 21	347	65.1	56	
29	896+01	899+50	OLD ROUTE 21	853	160.0	136	
29	894+93	896+35	OLD ROUTE 21, LT				142.0
29	896+01	899+50	OLD ROUTE 21, LT				349.0
29	894+93	896+09	OLD ROUTE 21, RT				183.3
29	896+09	899+50	OLD ROUTE 21, RT				341.0
30	899+50	904+00	OLD ROUTE 21, LT & RT	1100	206.3	176	900.0
31	904+00	908+50	OLD ROUTE 21, LT & RT	1100	206.3	176	900.0
32	908+50	912+54	OLD ROUTE 21, LT & RT	988	185.2	158	808.0
32	912+67	913+00	OLD ROUTE 21, LT & RT	81	15.1	12	66.0
33	913+00	917+50	OLD ROUTE 21, LT & RT	1100	206.3	176	900.0
34	917+50	922+00	OLD ROUTE 21, LT & RT	1100	206.3	176	900.0
35	922+00	926+50	OLD ROUTE 21, LT & RT	1100	206.3	176	900.0
36	926+50	931+00	OLD ROUTE 21, LT & RT	1100	206.3	176	900.0
37	931+00	934+78	OLD ROUTE 21, LT & RT	924	173.3	148	756.0
37	934+62	935+50	OLD ROUTE 21, LT & RT	215	40.3	34	176.0
38	935+50	940+00	OLD ROUTE 21, LT & RT	1100	206.3	176	900.0
39	940+00	943+46	OLD ROUTE 21, LT & RT	846	158.6	136	692.0
39	943+58	944+46	OLD ROUTE 21, LT & RT	215	40.3	34	176.0
39	944+46	945+08	OLD ROUTE 21, LT & RT				124.0
39	945+08	945+15	OLD ROUTE 21, LT & RT	17	3.2	2	14.0
			SHEET SUBTOTAL	17,798	3337.4	2844	14,717.3
			TOTAL	38,384	7198.2	6138	30,517.3

2B

STATE OF MISSOURI
RICHARD S. BAUM
NUMBER E-24320
REGISTERED PROFESSIONAL ENGINEER

DATE PREPARED
03-NOV-2016

ROUTE	STATE
21	MO
DISTRICT	SHEET NO.
SL	3

COUNTY
JEFFERSON

JOB NO.
PW17039RDW

CONTRACT ID.

PROJECT NO.

BRIDGE NO.

DATE	DESCRIPTION

JEFFERSON COUNTY
PUBLIC WORKS DEPARTMENT
P.O. BOX 100
HILLSBORO, MO 63050
(636-797-5340)
www.jeffcomo.org

[redacted]

JACOBS ENGINEERING GROUP INC.
701 NORTH 15TH STREET
ST. LOUIS, MO 63103
PHONE: 314-335-4800
CERTIFICATE OF AUTHORITY NUMBER: E-2001000163

MISSOURI HIGHWAYS AND TRANSPORTATION COMMISSION

SUMMARY OF QUANTITIES

2B

LINEAR GRADING					
SHEET	STATION	STATION	LOCATION	CLASS 2 STA	COMMENT
4	755+00	759+50	OLD ROUTE 21, LT	4.5	SHOULDER
4	755+00	759+50	OLD ROUTE 21, RT	4.5	SHOULDER
5	759+50	764+00	OLD ROUTE 21, LT	4.5	SHOULDER
5	759+50	764+00	OLD ROUTE 21, RT	4.5	SHOULDER
6	764+00	768+50	OLD ROUTE 21, LT	4.5	SHOULDER
6	764+00	768+50	OLD ROUTE 21, RT	4.5	SHOULDER
7	768+50	773+00	OLD ROUTE 21, LT	4.5	SHOULDER
7	768+50	773+00	OLD ROUTE 21, RT	4.5	SHOULDER
8	773+00	773+13	OLD ROUTE 21, LT	0.1	SHOULDER
8	773+14	775+28	OLD ROUTE 21, LT	2.1	SHOULDER
8	776+52	777+50	OLD ROUTE 21, LT	1.0	SHOULDER
8	773+00	773+13	OLD ROUTE 21, RT	0.1	SHOULDER
8	773+14	777+50	OLD ROUTE 21, RT	4.4	SHOULDER
9	777+50	782+00	OLD ROUTE 21, LT	4.5	SHOULDER
9	777+50	782+00	OLD ROUTE 21, RT	4.5	SHOULDER
10	782+00	785+05	OLD ROUTE 21, LT	3.1	SHOULDER
10	785+11	786+50	OLD ROUTE 21, LT	1.4	SHOULDER
10	782+00	785+05	OLD ROUTE 21, RT	3.1	SHOULDER
10	785+11	786+50	OLD ROUTE 21, RT	1.4	SHOULDER
11	786+50	788+04	OLD ROUTE 21, LT	1.5	SHOULDER
11	788+00	791+00	OLD ROUTE 21, LT	3.0	SHOULDER
11	786+50	788+04	OLD ROUTE 21, RT	1.5	SHOULDER
11	788+00	791+00	OLD ROUTE 21, RT	3.0	SHOULDER
12	791+00	795+50	OLD ROUTE 21, LT	4.5	SHOULDER
12	791+00	795+50	OLD ROUTE 21, RT	4.5	SHOULDER
13	795+50	800+00	OLD ROUTE 21, LT	4.5	SHOULDER
13	795+50	800+00	OLD ROUTE 21, RT	4.5	SHOULDER
14	800+00	804+50	OLD ROUTE 21, LT	4.5	SHOULDER
14	800+00	804+50	OLD ROUTE 21, RT	4.5	SHOULDER
15	804+50	809+00	OLD ROUTE 21, LT	4.5	SHOULDER
15	804+50	809+00	OLD ROUTE 21, RT	4.5	SHOULDER
16	809+00	811+38	OLD ROUTE 21, LT	2.4	SHOULDER
16	809+00	811+38	OLD ROUTE 21, RT	2.4	SHOULDER
17	816+11	818+00	OLD ROUTE 21, LT	1.9	SHOULDER
17	815+74	818+00	OLD ROUTE 21, RT	2.3	SHOULDER
18	818+00	822+50	OLD ROUTE 21, LT	4.5	SHOULDER
18	818+00	822+50	OLD ROUTE 21, RT	4.5	SHOULDER
19	822+50	822+75	OLD ROUTE 21, LT	0.3	SHOULDER
19	823+37	827+00	OLD ROUTE 21, LT	3.6	SHOULDER
19	822+50	826+16	OLD ROUTE 21, RT	3.7	SHOULDER
19	826+95	827+00	OLD ROUTE 21, RT	0.1	SHOULDER
20	827+00	827+86	OLD ROUTE 21, LT	0.9	SHOULDER
20	824+91	828+50	OLD ROUTE 21, LT	3.6	SHOULDER
20	827+00	827+86	OLD ROUTE 21, RT	0.9	SHOULDER
20	824+91	828+50	OLD ROUTE 21, RT	3.6	SHOULDER
21	828+50	833+00	OLD ROUTE 21, LT	4.5	SHOULDER
21	828+50	833+00	OLD ROUTE 21, RT	4.5	SHOULDER
22	833+00	837+50	OLD ROUTE 21, LT	4.5	SHOULDER
22	833+00	835+98	OLD ROUTE 21, RT	3.0	SHOULDER
22	837+08	837+50	OLD ROUTE 21, RT	0.4	SHOULDER
			SUBTOTAL	158.3	

LINEAR GRADING					
SHEET	STATION	STATION	LOCATION	CLASS 2 STA	COMMENT
23	837+50	841+00	OLD ROUTE 21, LT	3.5	SHOULDER
23	837+50	841+00	OLD ROUTE 21, RT	3.5	SHOULDER
24	849+50	854+00	OLD ROUTE 21, LT	4.5	SHOULDER
24	849+50	854+00	OLD ROUTE 21, RT	4.5	SHOULDER
25	854+00	854+40	OLD ROUTE 21, LT	0.4	SHOULDER
25	854+46	858+50	OLD ROUTE 21, LT	4.0	SHOULDER
25	854+00	854+40	OLD ROUTE 21, RT	0.4	SHOULDER
25	854+46	858+50	OLD ROUTE 21, RT	4.0	SHOULDER
26	858+50	860+77	OLD ROUTE 21, LT	2.3	SHOULDER
26	860+76	863+00	OLD ROUTE 21, LT	2.2	SHOULDER
26	858+50	860+77	OLD ROUTE 21, RT	2.3	SHOULDER
26	860+76	863+00	OLD ROUTE 21, RT	2.2	SHOULDER
27	863+00	867+50	OLD ROUTE 21, LT	4.5	SHOULDER
27	863+00	867+50	OLD ROUTE 21, RT	4.5	SHOULDER
28	867+50	869+00	OLD ROUTE 21, LT	1.5	SHOULDER
28	867+50	869+00	OLD ROUTE 21, RT	1.5	SHOULDER
29	894+93	896+35	OLD ROUTE 21, LT	1.4	SHOULDER
29	896+01	899+50	OLD ROUTE 21, LT	3.5	SHOULDER
29	894+93	896+35	OLD ROUTE 21, RT	1.4	SHOULDER
29	896+01	899+50	OLD ROUTE 21, RT	3.5	SHOULDER
30	899+50	904+00	OLD ROUTE 21, LT	4.5	SHOULDER
30	899+50	904+00	OLD ROUTE 21, RT	4.5	SHOULDER
31	904+00	908+50	OLD ROUTE 21, LT	4.5	SHOULDER
31	904+00	908+50	OLD ROUTE 21, RT	4.5	SHOULDER
32	908+50	912+54	OLD ROUTE 21, LT	4.0	SHOULDER
32	912+67	913+00	OLD ROUTE 21, LT	0.3	SHOULDER
32	908+50	912+54	OLD ROUTE 21, RT	4.0	SHOULDER
32	912+67	913+00	OLD ROUTE 21, RT	0.3	SHOULDER
33	913+00	917+50	OLD ROUTE 21, LT	4.5	SHOULDER
33	913+00	917+50	OLD ROUTE 21, RT	4.5	SHOULDER
34	917+50	922+00	OLD ROUTE 21, LT	4.5	SHOULDER
34	917+50	922+00	OLD ROUTE 21, RT	4.5	SHOULDER
35	922+00	926+50	OLD ROUTE 21, LT	4.5	SHOULDER
35	922+00	926+50	OLD ROUTE 21, RT	4.5	SHOULDER
36	926+50	931+00	OLD ROUTE 21, LT	4.5	SHOULDER
36	926+50	931+00	OLD ROUTE 21, RT	4.5	SHOULDER
37	931+00	934+78	OLD ROUTE 21, LT	3.8	SHOULDER
37	934+62	935+50	OLD ROUTE 21, LT	0.9	SHOULDER
37	931+00	934+78	OLD ROUTE 21, RT	3.8	SHOULDER
37	934+62	935+50	OLD ROUTE 21, RT	0.9	SHOULDER
38	935+50	940+00	OLD ROUTE 21, LT	4.5	SHOULDER
38	935+50	940+00	OLD ROUTE 21, RT	4.5	SHOULDER
39	940+00	943+46	OLD ROUTE 21, LT	3.5	SHOULDER
39	943+58	945+15	OLD ROUTE 21, LT	1.6	SHOULDER
39	940+00	943+46	OLD ROUTE 21, RT	3.5	SHOULDER
39	943+58	945+15	OLD ROUTE 21, RT	1.6	SHOULDER
			SUBTOTAL	146.8	
			TOTAL	305.1	

STATE OF MISSOURI
RICHARD S. BAUM
NUMBER E-24320
REGISTERED PROFESSIONAL ENGINEER

DATE PREPARED: 03-NOV-2016
ROUTE: 21 | STATE: MO
DISTRICT: SL | SHEET NO.: 3
COUNTY: JEFFERSON
JOB NO.: PW17039RDW
CONTRACT ID.
PROJECT NO.
BRIDGE NO.

DATE	DESCRIPTION

JEFFERSON COUNTY
PUBLIC WORKS DEPARTMENT
P.O. BOX 100
HILLSBORO, MO 63050
(636-797-5340)
www.jeffcomo.org

[redacted]

JACOBS ENGINEERING GROUP INC.
701 NORTH 15TH STREET
ST. LOUIS, MO 63103
PHONE: 314-335-4800
CERTIFICATE OF AUTHORITY: E-2007000163

MISSOURI HIGHWAYS AND TRANSPORTATION COMMISSION

2B

SUMMARY OF QUANTITIES

PAVEMENT EDGE TREATMENT				
SHEET	STATION	STATION	LOCATION	LF
4	755+00	759+50	OLD ROUTE 21, LT	450
4	755+00	759+50	OLD ROUTE 21, RT	450
5	759+50	764+00	OLD ROUTE 21, LT	450
5	759+50	764+00	OLD ROUTE 21, RT	450
6	764+00	768+50	OLD ROUTE 21, LT	450
6	764+00	768+50	OLD ROUTE 21, RT	450
7	768+50	773+00	OLD ROUTE 21, LT	450
7	768+50	773+00	OLD ROUTE 21, RT	450
8	773+00	773+13	OLD ROUTE 21, LT	13
8	773+14	775+28	OLD ROUTE 21, LT	214
8	776+52	777+50	OLD ROUTE 21, LT	98
8	773+00	773+13	OLD ROUTE 21, RT	13
8	773+14	777+50	OLD ROUTE 21, RT	436
9	777+50	782+00	OLD ROUTE 21, LT	450
9	777+50	782+00	OLD ROUTE 21, RT	450
10	782+00	785+05	OLD ROUTE 21, LT	305
10	785+11	786+50	OLD ROUTE 21, LT	139
10	782+00	785+05	OLD ROUTE 21, RT	305
10	785+11	786+50	OLD ROUTE 21, RT	139
11	786+50	788+04	OLD ROUTE 21, LT	154
11	788+00	791+00	OLD ROUTE 21, LT	300
11	786+50	788+04	OLD ROUTE 21, RT	154
11	788+00	791+00	OLD ROUTE 21, RT	300
12	791+00	795+50	OLD ROUTE 21, LT	450
12	791+00	795+50	OLD ROUTE 21, RT	450
13	795+50	800+00	OLD ROUTE 21, LT	450
13	795+50	800+00	OLD ROUTE 21, RT	450
14	800+00	804+50	OLD ROUTE 21, LT	450
14	800+00	804+50	OLD ROUTE 21, RT	450
15	804+50	809+00	OLD ROUTE 21, LT	450
15	804+50	809+00	OLD ROUTE 21, RT	450
16	809+00	811+38	OLD ROUTE 21, LT	238
16	809+00	811+38	OLD ROUTE 21, RT	238
17	816+11	818+00	OLD ROUTE 21, LT	189
17	815+74	818+00	OLD ROUTE 21, RT	226
18	818+00	822+50	OLD ROUTE 21, LT	450
18	818+00	822+50	OLD ROUTE 21, RT	450
19	822+50	822+75	OLD ROUTE 21, LT	25
19	823+37	827+00	OLD ROUTE 21, LT	363
19	822+50	826+16	OLD ROUTE 21, RT	366
19	826+95	827+00	OLD ROUTE 21, RT	5
20	827+00	827+86	OLD ROUTE 21, LT	86
20	824+91	828+50	OLD ROUTE 21, LT	359
20	827+00	827+86	OLD ROUTE 21, RT	86
20	824+91	828+50	OLD ROUTE 21, RT	359
21	828+50	833+00	OLD ROUTE 21, LT	450
21	828+50	833+00	OLD ROUTE 21, RT	450
22	833+00	837+50	OLD ROUTE 21, LT	450
22	833+00	835+98	OLD ROUTE 21, RT	298
22	837+08	837+50	OLD ROUTE 21, RT	42
			SUBTOTAL	15,800

PAVEMENT EDGE TREATMENT				
SHEET	STATION	STATION	LOCATION	LF
23	837+50	841+00	OLD ROUTE 21, LT	350
23	837+50	841+00	OLD ROUTE 21, RT	350
24	849+50	854+00	OLD ROUTE 21, LT	450
24	849+50	854+00	OLD ROUTE 21, RT	450
25	854+00	854+40	OLD ROUTE 21, LT	40
25	854+46	858+50	OLD ROUTE 21, LT	404
25	854+00	854+40	OLD ROUTE 21, RT	40
25	854+46	858+50	OLD ROUTE 21, RT	404
26	858+50	860+77	OLD ROUTE 21, LT	227
26	860+76	863+00	OLD ROUTE 21, LT	224
26	858+50	860+77	OLD ROUTE 21, RT	227
26	860+76	863+00	OLD ROUTE 21, RT	224
27	863+00	867+50	OLD ROUTE 21, LT	450
27	863+00	867+50	OLD ROUTE 21, RT	450
28	867+50	869+00	OLD ROUTE 21, LT	150
28	867+50	869+00	OLD ROUTE 21, RT	150
29	894+93	896+35	OLD ROUTE 21, LT	142
29	896+01	899+50	OLD ROUTE 21, LT	349
29	894+93	896+35	OLD ROUTE 21, RT	142
29	896+01	899+50	OLD ROUTE 21, RT	349
30	899+50	904+00	OLD ROUTE 21, LT	450
30	899+50	904+00	OLD ROUTE 21, RT	450
31	904+00	908+50	OLD ROUTE 21, LT	450
31	904+00	908+50	OLD ROUTE 21, RT	450
32	908+50	912+54	OLD ROUTE 21, LT	404
32	912+67	913+00	OLD ROUTE 21, LT	33
32	908+50	912+54	OLD ROUTE 21, RT	404
32	912+67	913+00	OLD ROUTE 21, RT	33
33	913+00	917+50	OLD ROUTE 21, LT	450
33	913+00	917+50	OLD ROUTE 21, RT	450
34	917+50	922+00	OLD ROUTE 21, LT	450
34	917+50	922+00	OLD ROUTE 21, RT	450
35	922+00	926+50	OLD ROUTE 21, LT	450
35	922+00	926+50	OLD ROUTE 21, RT	450
36	926+50	931+00	OLD ROUTE 21, LT	450
36	926+50	931+00	OLD ROUTE 21, RT	450
37	931+00	934+78	OLD ROUTE 21, LT	378
37	934+62	935+50	OLD ROUTE 21, LT	88
37	931+00	934+78	OLD ROUTE 21, RT	378
37	934+62	935+50	OLD ROUTE 21, RT	88
38	935+50	940+00	OLD ROUTE 21, LT	450
38	935+50	940+00	OLD ROUTE 21, RT	450
39	940+00	943+46	OLD ROUTE 21, LT	346
39	943+58	945+15	OLD ROUTE 21, LT	157
39	940+00	943+46	OLD ROUTE 21, RT	346
39	943+58	945+15	OLD ROUTE 21, RT	157
			SUBTOTAL	14,684
			TOTAL	30,484

STATE OF MISSOURI
RICHARD S. BAUM
NUMBER E-24320
REGISTERED PROFESSIONAL ENGINEER

DATE PREPARED
03-NOV-2016

ROUTE	STATE
21	MO
DISTRICT	SHEET NO.
SL	3

COUNTY
JEFFERSON

JOB NO.
PW17039RDW

CONTRACT ID.

PROJECT NO.

BRIDGE NO.

DATE	DESCRIPTION

JEFFERSON COUNTY
PUBLIC WORKS DEPARTMENT
P.O. BOX 100
HILLSBORO, MO 63050
(636-797-5340)
www.jeffcomo.org

[redacted]

JACOBS ENGINEERING GROUP INC.
201 NORTH 7TH STREET
ST. LOUIS, MO 63101
PHONE: 314-335-4800
CERTIFICATE OF AUTHORITY

MISSOURI HIGHWAYS AND TRANSPORTATION COMMISSION

2B

SUMMARY OF QUANTITIES

BITUMINOUS RUMBLE STRIPS					
SHEET	STATION	STATION	LOCATION	CENTERLINE	SHOULDER
				STA	STA
4	755+00	759+50	OLD ROUTE 21	4.5	
4	758+10	759+50	OLD ROUTE 21, RT		1.4
5	759+50	764+00	OLD ROUTE 21	4.5	
5	762+20	764+00	OLD ROUTE 21, LT		1.8
5	759+50	764+00	OLD ROUTE 21, RT		4.5
6	764+00	768+50	OLD ROUTE 21	4.5	
6	764+00	768+50	OLD ROUTE 21, LT		4.5
6	764+00	764+85	OLD ROUTE 21, RT		0.9
6	767+30	767+90	OLD ROUTE 21, RT		0.6
7	768+50	773+00	OLD ROUTE 21	4.5	
7	768+50	769+30	OLD ROUTE 21, LT		0.8
7	771+80	773+00	OLD ROUTE 21, LT		1.2
7	770+85	773+00	OLD ROUTE 21, RT		2.2
8	773+00	773+13	OLD ROUTE 21	0.1	
8	773+14	777+50	OLD ROUTE 21	4.4	
8	773+00	773+13	OLD ROUTE 21, LT		0.1
8	773+14	774+80	OLD ROUTE 21, LT		1.7
8	773+00	773+13	OLD ROUTE 21, RT		0.1
8	773+13	775+20	OLD ROUTE 21, RT		2.1
9	777+50	782+00	OLD ROUTE 21	4.5	
9	777+82	781+65	OLD ROUTE 21, LT		3.8
9	777+60	782+00	OLD ROUTE 21, RT		4.4
10	782+00	785+05	OLD ROUTE 21	3.1	
10	785+11	786+50	OLD ROUTE 21	1.4	
10	783+80	785+05	OLD ROUTE 21, LT		1.3
10	785+11	786+50	OLD ROUTE 21, LT		1.4
10	782+00	785+05	OLD ROUTE 21, RT		3.1
10	785+11	786+50	OLD ROUTE 21, RT		1.4
11	786+50	788+04	OLD ROUTE 21	1.5	
11	788+00	791+00	OLD ROUTE 21	3.0	
11	786+50	788+04	OLD ROUTE 21, LT		1.5
11	788+00	790+55	OLD ROUTE 21, LT		2.6
11	786+50	788+04	OLD ROUTE 21, RT		1.5
11	788+00	791+00	OLD ROUTE 21, RT		3.0
12	791+00	795+50	OLD ROUTE 21	4.5	
12	792+80	795+50	OLD ROUTE 21, LT		2.7
12	791+00	795+50	OLD ROUTE 21, RT		4.5
13	795+50	800+00	OLD ROUTE 21	4.5	
13	795+50	798+15	OLD ROUTE 21, LT		2.7
13	795+50	800+00	OLD ROUTE 21, RT		4.5
14	800+00	804+50	OLD ROUTE 21	4.5	
14	801+80	802+00	OLD ROUTE 21, LT		0.2
14	804+30	804+50	OLD ROUTE 21, LT		0.2
14	800+00	801+30	OLD ROUTE 21, RT		1.3
14	803+45	804+50	OLD ROUTE 21, RT		1.1
15	804+50	809+00	OLD ROUTE 21	4.5	
15	804+50	804+55	OLD ROUTE 21, LT		0.1
15	806+85	807+10	OLD ROUTE 21, LT		0.3
15	804+50	809+00	OLD ROUTE 21, RT		4.5
			SUBTOTAL	54.0	68.0

BITUMINOUS RUMBLE STRIPS					
SHEET	STATION	STATION	LOCATION	CENTERLINE	SHOULDER
				STA	STA
16	809+00	812+46	OLD ROUTE 21	3.5	
16	809+50	811+38	OLD ROUTE 21, LT		1.9
16	809+00	811+38	OLD ROUTE 21, RT		2.4
17	814+70	818+00	OLD ROUTE 21	3.3	
17	817+41	818+00	OLD ROUTE 21, LT		0.6
17	815+74	818+00	OLD ROUTE 21, RT		2.3
18	818+00	822+50	OLD ROUTE 21	4.5	
18	818+00	822+25	OLD ROUTE 21, LT		4.3
18	818+00	822+50	OLD ROUTE 21, RT		4.5
19	822+50	827+00	OLD ROUTE 21	4.5	
19	824+67	827+00	OLD ROUTE 21, LT		2.3
19	822+50	824+86	OLD ROUTE 21, RT		2.4
20	827+00	827+86	OLD ROUTE 21	0.9	
20	824+91	828+50	OLD ROUTE 21	3.6	
20	827+00	827+86	OLD ROUTE 21, LT		0.9
20	824+91	826+30	OLD ROUTE 21, LT		1.4
21	828+50	833+00	OLD ROUTE 21	4.5	
21	829+50	830+50	OLD ROUTE 21, LT		1.0
21	832+60	833+00	OLD ROUTE 21, LT		0.4
22	833+00	837+50	OLD ROUTE 21	4.5	
22	833+00	837+10	OLD ROUTE 21, LT		4.1
22	833+00	834+68	OLD ROUTE 21, RT		1.7
23	837+50	841+00	OLD ROUTE 21	3.5	
23	839+25	839+50	OLD ROUTE 21, LT		0.3
23	837+58	841+00	OLD ROUTE 21, RT		3.4
24	849+50	854+00	OLD ROUTE 21	4.5	
24	851+80	854+00	OLD ROUTE 21, LT		2.2
24	849+50	854+00	OLD ROUTE 21, RT		4.5
25	854+00	854+40	OLD ROUTE 21	0.4	
25	854+46	858+50	OLD ROUTE 21	4.0	
25	854+00	854+40	OLD ROUTE 21, LT		0.4
25	854+46	858+50	OLD ROUTE 21, LT		4.0
25	854+00	854+40	OLD ROUTE 21, RT		0.4
25	854+46	855+25	OLD ROUTE 21, RT		0.8
25	857+35	858+50	OLD ROUTE 21, RT		1.2
26	858+50	860+77	OLD ROUTE 21	2.3	
26	860+76	863+00	OLD ROUTE 21	2.2	
26	858+50	860+77	OLD ROUTE 21, LT		2.3
26	860+76	863+00	OLD ROUTE 21, LT		2.2
26	858+50	860+77	OLD ROUTE 21, RT		2.3
26	860+76	863+00	OLD ROUTE 21, RT		2.2
27	863+00	867+50	OLD ROUTE 21	4.5	
27	863+00	867+50	OLD ROUTE 21, LT		4.5
27	863+00	867+50	OLD ROUTE 21, RT		4.5
28	867+50	869+00	OLD ROUTE 21	1.5	
28	867+50	869+00	OLD ROUTE 21, LT		1.5
28	867+50	869+00	OLD ROUTE 21, RT		1.5
			SUBTOTAL	52.2	68.4

BITUMINOUS RUMBLE STRIPS					
SHEET	STATION	STATION	LOCATION	CENTERLINE	SHOULDER
				STA	STA
29	894+93	896+35	OLD ROUTE 21	1.4	
29	896+01	899+50	OLD ROUTE 21	3.5	
29	894+93	896+35	OLD ROUTE 21, RT		1.4
29	896+01	899+50	OLD ROUTE 21, RT		3.5
30	899+50	904+00	OLD ROUTE 21	4.5	
30	899+50	904+00	OLD ROUTE 21, RT		4.5
31	904+00	908+50	OLD ROUTE 21	4.5	
31	905+16	907+00	OLD ROUTE 21, LT		1.8
31	904+00	908+50	OLD ROUTE 21, RT		4.5
32	908+50	912+54	OLD ROUTE 21	4.0	
32	912+67	913+00	OLD ROUTE 21	0.3	
32	909+20	910+75	OLD ROUTE 21, LT		1.6
32	908+50	912+54	OLD ROUTE 21, RT		4.0
32	912+67	913+00	OLD ROUTE 21, RT		0.3
33	913+00	917+50	OLD ROUTE 21	4.5	
33	913+00	913+45	OLD ROUTE 21, LT		0.5
33	916+60	917+50	OLD ROUTE 21, LT		0.9
33	913+00	915+20	OLD ROUTE 21, RT		2.2
34	917+50	922+00	OLD ROUTE 21	4.5	
34	917+50	922+00	OLD ROUTE 21, LT		4.5
34	917+50	922+00	OLD ROUTE 21, RT		4.5
35	922+00	926+50	OLD ROUTE 21	4.5	
35	922+00	926+50	OLD ROUTE 21, LT		4.5
35	922+00	926+50	OLD ROUTE 21, RT		4.5
36	926+50	931+00	OLD ROUTE 21	4.5	
36	926+50	927+65	OLD ROUTE 21, LT		1.2
36	930+00	931+00	OLD ROUTE 21, LT		1.0
36	926+50	930+90	OLD ROUTE 21, RT		4.4
37	931+00	934+78	OLD ROUTE 21	3.8	
37	934+62	935+50	OLD ROUTE 21	0.9	
37	931+00	931+85	OLD ROUTE 21, LT		0.9
37	934+65	934+78	OLD ROUTE 21, LT		0.1
37	934+62	935+50	OLD ROUTE 21, RT		0.9
38	935+50	940+00	OLD ROUTE 21	4.5	
38	935+50	937+00	OLD ROUTE 21, LT		1.5
38	939+05	940+00	OLD ROUTE 21, RT		1.0
39	940+00	943+46	OLD ROUTE 21	3.5	
39	943+58	945+15	OLD ROUTE 21	1.6	
39	944+76	945+15	OLD ROUTE 21, LT		0.4
39	940+00	942+15	OLD ROUTE 21, RT		2.2
			SUBTOTAL	50.5	56.8
			TOTAL	156.7	193.2

REGISTERED PROFESSIONAL ENGINEER
STATE OF MISSOURI
RICHARD S. BAUM
NUMBER E-24320

DATE PREPARED
03-NOV-2016

ROUTE	STATE
21	MO
DISTRICT	SHEET NO.
SL	3

COUNTY
JEFFERSON

JOB NO.
PW17039RDW

CONTRACT ID.

PROJECT NO.

BRIDGE NO.

DESCRIPTION	DATE

JEFFERSON COUNTY
PUBLIC WORKS DEPARTMENT
P.O. BOX 100
HILLSBORO, MO 63050
(636-797-5340)
www.jeffcomo.org

[redacted]

JACOBS ENGINEERING GROUP INC.
ST. LOUIS, MO
PHONE
CERTIFICATE OF AUTHORITY

MISSOURI HIGHWAYS AND TRANSPORTATION COMMISSION

SUMMARY OF QUANTITIES

2B

PAVEMENT REPAIR QUANTITIES

SHEET	STATION	STATION	LOCATION	FURNISHING & PLACING CONCRETE MATERIAL FOR PAVEMENT REPAIR	SUBGRADE COMPACTION (6 IN. DEPTH) (PAVEMENT REPAIR)	TYPE 1 OR TYPE 5 AGGR. BASE (4 IN. THICK) (PAVEMENT REPAIR)	FULL DEPTH PAVEMENT REPAIR SAW CUT	DOWEL BAR (DRILLING, FURNISHING, AND INSTALLATION) FOR FULL DEPTH PAVEMENT REPAIR	DOWEL BAR (FURNISHING AND INSTALLATION WITH BASKETS) FOR FULL DEPTH PAVEMENT REPAIR	ASPHALT REINFORCEMENT CRACK CONTROL GRID
				SY	SY	SY	LF	EA	EA	SY
7	770+01		OLD ROUTE 21, LT & RT	14.7	15	15	44	40		22.0
7	771+02		OLD ROUTE 21, LT & RT	14.7	15	15	44	40		22.0
8	773+53		OLD ROUTE 21, LT & RT	14.7	15	15	44	40		22.0
8	774+51		OLD ROUTE 21, LT & RT	14.7	15	15	44	40		22.0
8	775+18		OLD ROUTE 21, LT & RT	14.7	15	15	44	40		22.0
8	776+32		OLD ROUTE 21, LT & RT	14.7	15	15	44	40		22.0
8	776+72		OLD ROUTE 21, LT & RT	14.7	15	15	44	40		22.0
13	798+06		OLD ROUTE 21, LT & RT	14.7	15	15	44	40		22.0
14	803+58		OLD ROUTE 21, LT & RT	14.7	15	15	44	40		22.0
15	805+55		OLD ROUTE 21, LT & RT	14.7	15	15	44	40		22.0
15	806+05		OLD ROUTE 21, LT & RT	14.7	15	15	44	40		22.0
15	808+56		OLD ROUTE 21, LT & RT	14.7	15	15	44	40		22.0
16	810+56		OLD ROUTE 21, LT & RT	14.7	15	15	44	40		22.0
16	811+07		OLD ROUTE 21, LT & RT	14.7	15	15	44	40		22.0
16	811+57		OLD ROUTE 21, LT & RT	14.7	15	15	44	40		22.0
16	812+25		OLD ROUTE 21, LT & RT	14.7	15	15	44	40		22.0
18	819+53		OLD ROUTE 21, LT & RT	14.7	15	15	44	40		22.0
18	820+03		OLD ROUTE 21, LT & RT	14.7	15	15	44	40		22.0
20	826+55		OLD ROUTE 21, LT & RT	14.7	15	15	44	40		22.0
20	827+55		OLD ROUTE 21, LT & RT	14.7	15	15	44	40		22.0
22	836+06		OLD ROUTE 21, LT & RT	14.7	15	15	44	40		22.0
23	838+07		OLD ROUTE 21, LT & RT	14.7	15	15	44	40		22.0
25	855+32		OLD ROUTE 21, LT	7.3	7	7	22	20		11.0
25	856+31		OLD ROUTE 21, LT	7.3	7	7	22	20		11.0
34	917+64		OLD ROUTE 21, LT & RT	14.7	15	15	44	40		22.0
34	919+14		OLD ROUTE 21, LT & RT	14.7	15	15	44	40		22.0
34	920+65		OLD ROUTE 21, LT & RT	14.7	15	15	44	40		22.0
35	922+14		OLD ROUTE 21, LT & RT	14.7	15	15	44	40		22.0
35	923+14		OLD ROUTE 21, LT & RT	14.7	15	15	44	40		22.0
35	923+65		OLD ROUTE 21, LT & RT	14.7	15	15	44	40		22.0
35	925+14		OLD ROUTE 21, RT	7.3	7	7	22	20		11.0
36	928+15		OLD ROUTE 21, LT & RT	14.7	15	15	44	40		22.0
36	929+14		OLD ROUTE 21, LT & RT	14.7	15	15	44	40		22.0
36	929+64		OLD ROUTE 21, LT & RT	14.7	15	15	44	40		22.0
36	930+14		OLD ROUTE 21, LT & RT	14.7	15	15	44	40		22.0
37	931+65		OLD ROUTE 21, LT & RT	14.7	15	15	44	40		22.0
37	932+32		OLD ROUTE 21, LT & RT	14.7	15	15	44	40		22.0
38	936+41		OLD ROUTE 21, LT & RT	14.7	15	15	44	40		22.0
38	937+42		OLD ROUTE 21, LT & RT	14.7	15	15	44	40		22.0
38	938+41		OLD ROUTE 21, LT & RT	14.7	15	15	44	40		22.0
38	938+92		OLD ROUTE 21, LT & RT	14.7	15	15	44	40		22.0
38	939+91		OLD ROUTE 21, LT & RT	14.7	15	15	44	40		22.0
39	940+91		OLD ROUTE 21, LT & RT	14.7	15	15	44	40		22.0
39	941+91		OLD ROUTE 21, LT & RT	14.7	15	15	44	40		22.0
39	942+97		OLD ROUTE 21, LT & RT	14.7	15	15	44	40		22.0
39	944+10		OLD ROUTE 21, LT & RT	14.7	15	15	44	40		22.0
39	944+46	945+08	OLD ROUTE 21, LT & RT	151.6	152	152	44	40	60	158.9
			SUBTOTAL	805.6	818	818	2002	1820	60	1137.9
			20% CONTINGENCY	161.1	164	164	400	364	12	227.6
			TOTAL	966.7	982	982	2402	2184	72	1365.5

SUMMARY OF QUANTITIES
SHEET 7 OF 11

STATE OF MISSOURI
RICHARD S. BAUM
NUMBER E-24320
REGISTERED PROFESSIONAL ENGINEER

DATE PREPARED
03-NOV-2016

ROUTE	STATE
21	MO
DISTRICT	SHEET NO.
SL	3

COUNTY
JEFFERSON

JOB NO.
PW17039RDW

CONTRACT ID.

PROJECT NO.

BRIDGE NO.

DATE	DESCRIPTION

JEFFERSON COUNTY
PUBLIC WORKS DEPARTMENT

P.O. BOX 100
HILLSBORO, MO 63050
(636-797-5340)
www.jeffcomo.org

JACOBS ENGINEERING GROUP INC.
701 NORTH 15TH STREET
ST. LOUIS, MO 63103
PHONE: 314-335-4000
CERTIFICATE OF AUTHORITY NUMBER: E-2001000172

MISSOURI HIGHWAYS AND TRANSPORTATION COMMISSION

2B

SUMMARY OF QUANTITIES

ENTRANCES AND PAVED APPROACHES					
SHEET	STATION	LOCATION	COLDMILLING BIT PVMT FOR REMOVAL OF SURFACING (3 IN. OR LESS)	TACK COAT	BITUMINOUS PAVEMENT MIXTURE PG64-22 (BASE)
			SY	GAL	TON
4	755+65	OLD ROUTE 21, LT	30	2	4.9
4	755+83	OLD ROUTE 21, RT	42	3	6.8
4	757+13	OLD ROUTE 21, RT	45	4	7.3
4	758+31	OLD ROUTE 21, LT	16	1	2.6
5	760+63	OLD ROUTE 21, LT	30	2	4.8
6	765+50	OLD ROUTE 21, RT	30	2	4.9
7	769+49	OLD ROUTE 21, RT	29	2	4.7
7	770+12	OLD ROUTE 21, LT	35	3	5.6
7	770+13	OLD ROUTE 21, RT	19	2	3.0
8	776+78	OLD ROUTE 21, RT	28	2	4.5
10	782+32	OLD ROUTE 21, LT	14	1	2.3
12	791+24	OLD ROUTE 21, LT	18	1	2.8
13	798+73	OLD ROUTE 21, LT	12	1	1.9
14	800+30	OLD ROUTE 21, LT	17	1	2.8
14	802+76	OLD ROUTE 21, LT	22	2	3.6
14	802+82	OLD ROUTE 21, RT	13	1	2.1
15	805+32	OLD ROUTE 21, LT	22	2	3.6
15	807+90	OLD ROUTE 21, LT	27	2	4.3
20	825+24	OLD ROUTE 21, RT	12	1	1.9
20	827+04	OLD ROUTE 21, LT	27	2	4.3
20	827+21	OLD ROUTE 21, RT	17	1	2.8
20	828+06	OLD ROUTE 21, LT	9	1	1.5
21	829+52	OLD ROUTE 21, RT	19	2	3.1
21	831+11	OLD ROUTE 21, LT	12	1	1.9
21	831+74	OLD ROUTE 21, RT	17	1	2.7
23	837+76	OLD ROUTE 21, LT	14	1	2.2
23	840+44	OLD ROUTE 21, LT	48	4	7.7
24	850+06	OLD ROUTE 21, LT	38	3	6.1
25	856+73	OLD ROUTE 21, RT	14	1	2.3
29	896+17	OLD ROUTE 21, LT	35	3	5.6
29	898+34	OLD ROUTE 21, LT	38	3	6.1
30	899+60	OLD ROUTE 21, LT	18	1	2.9
30	901+11	OLD ROUTE 21, LT	20	2	3.3
31	907+77	OLD ROUTE 21, LT	17	1	2.8
32	911+46	OLD ROUTE 21, LT	20	2	3.2
33	913+99	OLD ROUTE 21, LT	7	1	1.2
33	915+17	OLD ROUTE 21, LT	9	1	1.5
33	916+77	OLD ROUTE 21, RT	22	2	3.6
37	932+33	OLD ROUTE 21, RT	11	1	1.7
37	932+67	OLD ROUTE 21, RT	29	2	4.7
37	933+19	OLD ROUTE 21, LT	18	1	2.9
38	937+77	OLD ROUTE 21, LT	22	2	3.6
38	938+26	OLD ROUTE 21, RT	31	2	5.0
38	939+27	OLD ROUTE 21, LT	9	1	1.5
39	940+34	OLD ROUTE 21, LT	12	1	1.9
39	941+63	OLD ROUTE 21, LT	22	2	3.6
39	943+75	OLD ROUTE 21, RT	17	1	2.8
39	944+65	OLD ROUTE 21, RT	12	1	1.9
		TOTAL	1045	82	168.8

REGISTERED STATE OF MISSOURI RICHARD S. BAUM NUMBER E-24320 PROFESSIONAL ENGINEER

DATE PREPARED
03-NOV-2016

ROUTE	STATE
21	MO
DISTRICT	SHEET NO.
SL	3

COUNTY
JEFFERSON

JOB NO.
PW17039RDW

CONTRACT ID.

PROJECT NO.

BRIDGE NO.

DATE	DESCRIPTION

JEFFERSON COUNTY
PUBLIC WORKS DEPARTMENT

P.O. BOX 100
HILLSBORO, MO 63050
(636-797-5340)
www.jeffcomo.org

JACOBS
JACOBS ENGINEERING GROUP INC.
ST. LOUIS, MO
PHONE
CERTIFICATE OF AUTHORITY

MISSOURI HIGHWAYS AND TRANSPORTATION COMMISSION

SUMMARY OF QUANTITIES

2B

PAVEMENT MARKING						
				WATERBORNE PAINT, TYPE P BEADS		
SHEET	STATION	STATION	LOCATION	4" SOLID WHITE	4" SOLID YELLOW	4" INT. YELLOW
				LF	LF	LF
4	755+00	759+50	OLD ROUTE 21	900	900	
5	759+50	764+00	OLD ROUTE 21	900	900	
6	764+00	768+50	OLD ROUTE 21	900	900	
7	768+50	773+00	OLD ROUTE 21	900	900	
8	773+00	773+13	OLD ROUTE 21	26	26	
8	773+14	777+50	OLD ROUTE 21	872	872	
9	777+50	782+00	OLD ROUTE 21	900	900	
10	782+00	783+57	OLD ROUTE 21	314	314	
10	783+57	785+05	OLD ROUTE 21	296	148	37
10	785+11	786+50	OLD ROUTE 21	278	139	35
11	786+50	788+04	OLD ROUTE 21	308	154	39
11	788+00	791+00	OLD ROUTE 21	600	300	75
12	791+00	791+81	OLD ROUTE 21	162	81	20
12	791+81	795+50	OLD ROUTE 21	738		92
13	795+50	800+00	OLD ROUTE 21	900		113
14	800+00	804+50	OLD ROUTE 21	900		113
15	804+50	807+14	OLD ROUTE 21	528		66
15	807+14	809+00	OLD ROUTE 21	372	186	47
16	809+00	811+14	OLD ROUTE 21	428	214	54
16	811+14	813+50	OLD ROUTE 21	472	472	
17	813+50	814+85	OLD ROUTE 21	270	270	
17	814+85	816+15	OLD ROUTE 21	130	260	
17	816+15	818+00	OLD ROUTE 21	370	370	
18	818+00	822+50	OLD ROUTE 21	900	900	
19	822+50	822+65	OLD ROUTE 21	30	30	
19	822+65	823+43	OLD ROUTE 21	78	156	
19	823+43	826+15	OLD ROUTE 21	544	544	
19	826+15	826+96	OLD ROUTE 21	81	162	
19	826+96	827+00	OLD ROUTE 21	8	8	
20	827+00	827+86	OLD ROUTE 21	172	172	
20	824+91	828+50	OLD ROUTE 21	718	718	
			SUBTOTAL	14.995	10.996	689

PAVEMENT MARKING						
				WATERBORNE PAINT, TYPE P BEADS		
SHEET	STATION	STATION	LOCATION	4" SOLID WHITE	4" SOLID YELLOW	4" INT. YELLOW
				LF	LF	LF
21	828+50	833+00	OLD ROUTE 21	900	900	
22	833+00	837+50	OLD ROUTE 21	900	900	
23	837+50	841+00	OLD ROUTE 21	700	700	
24	849+50	850+96	OLD ROUTE 21	292	292	
24	850+96	854+00	OLD ROUTE 21	608	304	76
25	854+00	854+40	OLD ROUTE 21	80	40	10
25	854+46	858+50	OLD ROUTE 21	808	404	101
26	858+50	860+77	OLD ROUTE 21	454	227	57
26	860+76	862+38	OLD ROUTE 21	324	162	41
26	862+38	863+00	OLD ROUTE 21	124	124	
27	863+00	863+53	OLD ROUTE 21	106	106	
27	863+53	867+50	OLD ROUTE 21	794	397	99
28	867+50	869+00	OLD ROUTE 21	300	150	38
29	894+93	896+35	OLD ROUTE 21	284	284	
29	896+01	899+50	OLD ROUTE 21	698	698	
30	899+50	904+00	OLD ROUTE 21	900	900	
31	904+00	908+50	OLD ROUTE 21	900	900	
32	908+50	912+54	OLD ROUTE 21	808	808	
32	912+67	913+00	OLD ROUTE 21	66	66	
33	913+00	917+50	OLD ROUTE 21	900	900	
34	917+50	922+00	OLD ROUTE 21	900	900	
35	922+00	926+50	OLD ROUTE 21	900	900	
36	926+50	931+00	OLD ROUTE 21	900	900	
37	931+00	934+78	OLD ROUTE 21	756	756	
37	934+62	935+50	OLD ROUTE 21	176	176	
38	935+50	940+00	OLD ROUTE 21	900	900	
39	940+00	943+46	OLD ROUTE 21	692	692	
39	943+58	945+15	OLD ROUTE 21	314	314	
			SUBTOTAL	16.484	14.800	421
			TOTAL	31.479	25.796	1110

STATE OF MISSOURI
RICHARD S. BAUM
NUMBER E-24320
REGISTERED PROFESSIONAL ENGINEER

DATE PREPARED
03-NOV-2016

ROUTE	STATE
21	MO
DISTRICT	SHEET NO.
SL	3

COUNTY
JEFFERSON

JOB NO.
PW17039RDW

CONTRACT ID.

PROJECT NO.

BRIDGE NO.

DATE	DESCRIPTION

JEFFERSON COUNTY
PUBLIC WORKS DEPARTMENT

P.O. BOX 100
HILLSBORO, MO 63050
(636-797-5340)
www.jeffcomo.org

[redacted]

[redacted]

MISSOURI HIGHWAYS AND TRANSPORTATION COMMISSION

2B

SUMMARY OF QUANTITIES

TEMPORARY PAVEMENT MARKING						
SHEET	STATION	STATION	LOCATION	TEMPORARY RAISED PAVEMENT MARKER		WATERBORNE PAINT, TYPE P BEADS
				TYPE 2 (WHITE)	TYPE 2 (YELLOW)	4" SOLID YELLOW
				EA	EA	LF
4	755+00	759+50	OLD ROUTE 21	12	11	44
5	759+50	764+00	OLD ROUTE 21	12	11	44
6	764+00	768+50	OLD ROUTE 21	12	11	44
7	768+50	773+00	OLD ROUTE 21	12	11	44
8	773+14	777+50	OLD ROUTE 21	12	11	44
9	777+50	782+00	OLD ROUTE 21	12	11	44
10	782+00	783+57	OLD ROUTE 21	6	4	16
10	783+57	785+05	OLD ROUTE 21	6	4	16
10	785+11	786+50	OLD ROUTE 21	6	3	12
11	786+50	788+04	OLD ROUTE 21	6	4	16
11	788+00	791+00	OLD ROUTE 21	12	8	32
12	791+00	791+81	OLD ROUTE 21	0	2	8
12	791+81	795+50	OLD ROUTE 21	12	9	36
13	795+50	800+00	OLD ROUTE 21	12	11	44
14	800+00	804+50	OLD ROUTE 21	12	11	44
15	804+50	807+14	OLD ROUTE 21	6	7	28
15	807+14	809+00	OLD ROUTE 21	6	5	20
16	809+00	811+14	OLD ROUTE 21	6	5	20
16	811+14	813+50	OLD ROUTE 21	6	6	24
17	813+50	814+85	OLD ROUTE 21	6	3	12
17	814+85	816+15	OLD ROUTE 21	6	3	12
17	816+15	818+00	OLD ROUTE 21	6	5	20
18	818+00	822+50	OLD ROUTE 21	12	11	44
19	822+65	823+43	OLD ROUTE 21	0	2	8
19	823+43	826+15	OLD ROUTE 21	6	7	28
19	826+15	826+96	OLD ROUTE 21	0	2	8
20	827+00	827+86	OLD ROUTE 21	0	2	8
20	824+91	828+50	OLD ROUTE 21	12	9	36
			SUBTOTAL	216	189	756

TEMPORARY PAVEMENT MARKING						
SHEET	STATION	STATION	LOCATION	TEMPORARY RAISED PAVEMENT MARKER		WATERBORNE PAINT, TYPE P BEADS
				TYPE 2 (WHITE)	TYPE 2 (YELLOW)	4" SOLID YELLOW
				EA	EA	LF
21	828+50	833+00	OLD ROUTE 21	12	11	44
22	833+00	837+50	OLD ROUTE 21	12	11	44
23	837+50	841+00	OLD ROUTE 21	12	9	36
24	849+50	850+96	OLD ROUTE 21	6	4	16
24	850+96	854+00	OLD ROUTE 21	12	8	32
25	854+00	854+40	OLD ROUTE 21	0	1	4
25	854+46	858+50	OLD ROUTE 21	12	10	40
26	858+50	860+77	OLD ROUTE 21	6	6	24
26	860+76	862+38	OLD ROUTE 21	6	4	16
26	862+38	863+00	OLD ROUTE 21	0	2	8
27	863+00	863+53	OLD ROUTE 21	0	1	4
27	863+53	867+50	OLD ROUTE 21	12	10	40
28	867+50	869+00	OLD ROUTE 21	6	4	16
29	894+93	896+35	OLD ROUTE 21	6	4	16
29	896+01	899+50	OLD ROUTE 21	12	9	36
30	899+50	904+00	OLD ROUTE 21	12	11	44
31	904+00	908+50	OLD ROUTE 21	12	11	44
32	908+50	912+54	OLD ROUTE 21	12	10	40
32	912+67	913+00	OLD ROUTE 21	0	1	4
33	913+00	917+50	OLD ROUTE 21	12	11	44
34	917+50	922+00	OLD ROUTE 21	12	11	44
35	922+00	926+50	OLD ROUTE 21	12	11	44
36	926+50	931+00	OLD ROUTE 21	12	11	44
37	931+00	934+78	OLD ROUTE 21	12	9	36
37	934+62	935+50	OLD ROUTE 21	0	2	8
38	935+50	940+00	OLD ROUTE 21	12	11	44
39	940+00	943+46	OLD ROUTE 21	12	9	36
39	943+58	945+15	OLD ROUTE 21	6	4	16
			SUBTOTAL	240	206	824
			TOTAL	456	395	1580

GUARDRAIL					
SHEET	STATION	STATION	LOCATION	MGS	CRASHWORTHY END TERMINAL (MASH)
				LF	EA
19	822+55.73	825+71.54	OLD ROUTE 21, RT	312.5	2
19	823+82.29	826+91.56	OLD ROUTE 21, LT	312.5	2
29	894+85.35	895+84.38	OLD ROUTE 21, RT	100.0	1
			TOTAL	725	5

REGISTERED PROFESSIONAL ENGINEER
STATE OF MISSOURI
RICHARD S. BAUM
NUMBER E-24320

DATE PREPARED: 03-NOV-2016
ROUTE: 21
STATE: MO
DISTRICT: SL
SHEET NO.: 3
COUNTY: JEFFERSON
JOB NO.: PW17039RDW
CONTRACT ID.:
PROJECT NO.:
BRIDGE NO.:

DESCRIPTION
DATE

JEFFERSON COUNTY
PUBLIC WORKS DEPARTMENT
P.O. BOX 100
HILLSBORO, MO 63050
(636-797-5340)
www.jeffcomo.org

[redacted]

JACOBS ENGINEERING GROUP INC.
101 N. BROADWAY
ST. LOUIS, MO 63102
PHONE: 314-335-4800
CERTIFICATE OF AUTHORITY NUMBER: E-2005000146

EFFECTIVE: 08-01-2012

SIGN	SIZE (IN.)	AREA (SQ. FT.)	QTY	TOTAL AREA	QTY RELOC	TOTAL RELOC AREA	DESCRIPTION
WARNING SIGNS							
W01-1L	48X48	16.00					TURN (SYMBOL LEFT ARROW)
W01-1R	48X48	16.00					TURN (SYMBOL RIGHT ARROW)
W01-2L	48X48	16.00					CURVE (SYMBOL LEFT ARROW)
W01-2R	48X48	16.00					CURVE (SYMBOL RIGHT ARROW)
W01-3L	48X48	16.00					REVERSE TURN (SYMBOL LEFT ARROW)
W01-3R	48X48	16.00					REVERSE TURN (SYMBOL RIGHT ARROW)
W01-4L	48X48	16.00					REVERSE CURVE (SYMBOL LEFT ARROW)
W01-4R	48X48	16.00					REVERSE CURVE (SYMBOL RIGHT ARROW)
W01-4bL	48X48	16.00					DOUBLE ARROW REVERSE CURVE (SYMBOL LEFT ARROWS)
W01-4bR	48X48	16.00					DOUBLE ARROW REVERSE CURVE (SYMBOL RIGHT ARROWS)
W01-4cL	48X48	16.00					TRIPLE ARROW REVERSE CURVE (SYMBOL LEFT ARROWS)
W01-4cR	48X48	16.00					TRIPLE ARROW REVERSE CURVE (SYMBOL RIGHT ARROWS)
W01-6	60X30	12.50					HORIZONTAL ARROW (SYMBOL)
W01-6a	72X36	18.00					HORIZONTAL ARROW (SYMBOL ON PERMANENT BARRICADE)
W01-7	60X30	12.50					DOUBLE HEAD HORIZONTAL ARROW (SYMBOL)
W01-7a	72X36	18.00					DOUBLE HEAD HORIZONTAL ARROW (SYMBOL ON PERMANENT BARRICADE)
W01-8	18X24	3.00					CHEVRON (SYMBOL)
W01-8a	30X36	7.50					CHEVRON (SYMBOL FOR DIVIDED HIGHWAYS)
W03-1	48X48	16.00					STOP AHEAD (SYMBOL)
W03-2	48X48	16.00					YIELD AHEAD (SYMBOL)
W03-3	48X48	16.00					SIGNAL AHEAD (SYMBOL)
W03-4	48X48	16.00					BE PREPARED TO STOP
W03-5	48X48	16.00					SPEED LIMIT AHEAD
W04-1L	48X48	16.00					MERGE (SYMBOL FROM LEFT)
W04-1R	48X48	16.00					MERGE (SYMBOL FROM RIGHT)
W05-1	48X48	16.00					ROAD/BRIDGE/RAMP NARROWS
W05-3	48X48	16.00					ONE LANE BRIDGE
W05-5	48X48	16.00	1	16.00			NARROW LANES
W06-1	48X48	16.00					DIVIDED HIGHWAY (SYMBOL)
W06-2	48X48	16.00					DIVIDED HIGHWAY END (SYMBOL)
W06-3	48X48	16.00					TWO WAY TRAFFIC (SYMBOL)
W07-3a	30X24	5.00					NEXT XX MILES (PLAQUE)
W08-1	48X48	16.00	12	192.00			BUMP
W08-2	48X48	16.00					DIP
W08-3	48X48	16.00					PAVEMENT ENDS
W08-4	48X48	16.00					SOFT SHOULDER
W08-5	48X48	16.00					SLIPPERY WHEN WET (SYMBOL)
W08-6	48X48	16.00					TRUCK CROSSING WITH FLAGS
W08-6c	48X48	16.00					TRUCK ENTRANCE
W08-7	36X36	9.00					LOOSE GRAVEL
W08-9	48X48	16.00					LOW SHOULDER
W08-11	48X48	16.00	4	64.00			UNEVEN LANES
W08-12	48X48	16.00	4	64.00			NO CENTER LINE
W10-1	42 RND.	9.62					RAILROAD CROSSING
W012-1	24X24	4.00					DOUBLE DOWN ARROW (SYMBOL)
W012-2	48X48	16.00					LOW CLEARANCE (SYMBOL)
W012-2x	24X18	3.00					LOW CLEARANCE (PLAQUE)
W012-2a	84X24	14.00					OVERHEAD LOW CLEARANCE (FEET AND INCHES)
W08-15	48X48	16.00					GROOVED PAVEMENT
W08-15p	30X24	5.00					MOTORCYCLE (PLAQUE)
W08-17	48X48	16.00	4	64.00			SHOULDER DROP-OFF (SYMBOL)
W08-17p	30X24	5.00	4	20.00			SHOULDER DROP-OFF (PLAQUE)
SPECIAL	120X60	50.00					LOW CLEARANCE XX FT XX IN XX MILES AHEAD
SPECIAL	120X60	50.00					WIDTH RESTRICTION XX FT XX IN XX MILES AHEAD
W013-1	30X30	6.25					ADVISORY SPEED (PLAQUE)
W016-2	30X24	5.00					XXX FEET (PLAQUE)
W016-3	30X24	5.00					X MILE (PLAQUE)
W020-1	48X48	16.00	4	64.00			ROAD/BRIDGE/RAMP WORK AHEAD
W020-2	48X48	16.00	2	32.00			DETOUR AHEAD
W020-3	48X48	16.00					ROAD CLOSED AHEAD
W020-4	48X48	16.00	4	64.00			ONE LANE ROAD AHEAD
W020-5	48X48	16.00					RIGHT/CENTER/LEFT LANE CLOSED AHEAD
W020-5a	48X48	16.00					2 RIGHT/CENTER/LEFT LANES CLOSED AHEAD
W020-6a	48X48	16.00					RIGHT/CENTER/LEFT LANE CLOSED
W020-7a	48X48	16.00	4	64.00			FLAGGER (SYMBOL) WITH FLAGS
W021-2	36X36	9.00					FRESH OIL
W021-5b	48X48	16.00	2	32.00			SHOULDER WORK AHEAD
W022-1	48X48	16.00					BLASTING ZONE AHEAD
W022-2	42X36	10.50					TURN OFF 2-WAY RADIO AND PHONE
W022-3	42X36	10.50					END BLASTING ZONE
W022-6e	21X15	2.19					WET PAINT (ARROW PIVOTS)
GUIDE SIGNS							
SPECIAL	36X36	9.00					FRESH OIL/LOOSE GRAVEL
E05-1	36X48	12.00					GORE EXIT
E05-2	48X36	12.00					EXIT OPEN
E05-2a	48X36	12.00					EXIT CLOSED
G020-1	60X24	10.00					ROAD WORK NEXT XX MILES
G020-2	48X24	8.00					END ROAD WORK
G020-4	36X18	4.50					PILOT CAR FOLLOW ME
SPECIAL	42X30	8.75					PLEASE WAIT FOR PILOT CAR
G020-5aP	36X24	6.00					WORK ZONE (PLAQUE)
M04-8a	24X18	3.00	2	6.00			END DETOUR
M04-9L	48X36	12.00	7	84.00			DETOUR (LEFT ARROW)
M04-9R	48X36	12.00	6	72.00			DETOUR (RIGHT ARROW)
M04-10L	48X18	6.00					DETOUR (ARROW LEFT)
M04-10R	48X18	6.00					DETOUR (ARROW RIGHT)
M04-9S	48X36	12.00	4	48.00			DETOUR (STRAIGHT ARROW)
	48X30	10.00	9	90.00			OLD ROUTE 21
	48X30	10.00	3	30.00			(SB) OLD ROUTE 21
	48X30	10.00	5	50.00			(NB) OLD ROUTE 21
REGULATORY SIGNS							
R1-1	48X48	13.25	1	13.25			STOP
R1-2	48 TRI.	6.93					YIELD
R1-2a	36X36	9.00					TO ONCOMING TRAFFIC (PLAQUE)
R1-3	20X9	1.25					X-WAY (PLAQUE)
R2-1	36X48	12.00					SPEED LIMIT XX
R3-1	48X48	16.00					NO RIGHT TURN (SYMBOL)
R3-2	48X48	16.00					NO LEFT TURN (SYMBOL)
R3-3	36X36	9.00					NO TURNS
R3-4	48X48	16.00					NO U-TURN (SYMBOL)
R3-7L	30X30	6.25					LEFT LANE MUST TURN LEFT
R3-7R	30X30	6.25					RIGHT LANE MUST TURN RIGHT
R4-1	36X48	12.00					DO NOT PASS
R4-2	36X48	12.00					PASS WITH CARE
R4-7aL	36X48	12.00					KEEP LEFT (HORIZONTAL ARROW)
R4-7a	36X48	12.00					KEEP RIGHT (HORIZONTAL ARROW)
R5-1	30X30	6.25					DO NOT ENTER
R5-1a	36X24	6.00					WRONG WAY
R6-1L	48X18	6.00					ONE WAY ARROW (LEFT)
R6-1R	48X18	6.00					ONE WAY ARROW (RIGHT)
R6-2L	24X30	5.00					ONE WAY (LEFT)
R6-2R	24X30	5.00					ONE WAY (RIGHT)
R10-6	24X36	6.00					STOP HERE ON RED (45° ARROW)
R11-2	48X30	10.00	2	20.00			ROAD CLOSED
R11-3a	60X30	12.50	1	12.50			ROAD CLOSED XX MILES AHEAD LOCAL TRAFFIC ONLY
R11-4	60X30	12.50					ROAD CLOSED TO THRU TRAFFIC
S4-4	36X15	3.75					WHEN FLASHING
CONST-3A	60X48	20.00					FINE SIGN
CONST-3X	56X12	4.67					SPEEDING/PASSING (PLATE)
MISCELLANEOUS SIGNS							
SPECIAL	36X48	12.00					POINT OF PRESENCE
SPECIAL	96X48	32.00					POINT OF PRESENCE
CONST-7-48	48X24	8.00					RATE OUR WORK ZONE
CONST-7-72	72X36	18.00					RATE OUR WORK ZONE
616-10.05 CONSTRUCTION SIGNS TOTAL				1101.75			
616-10.10 RELOCATED SIGNS TOTAL							

ITEM NUMBER	TOTAL QTY	DESCRIPTION
6122008		IMPACT ATTENUATOR (8 SAND BARRELS)
6122009		IMPACT ATTENUATOR (9 SAND BARRELS)
6122010		IMPACT ATTENUATOR (10 SAND BARRELS)
6122012		IMPACT ATTENUATOR (12 SAND BARRELS)
6122014		IMPACT ATTENUATOR (14 SAND BARRELS)
6122017		IMPACT ATTENUATOR (17 SAND BARRELS)
6122019		IMPACT ATTENUATOR (19 SAND BARRELS)
6122020		REPLACEMENT SAND BARREL
6122030		IMPACT ATTENUATOR ARRAY (RELOCATION)
6123000A	1	TRUCK OR TRAILER MOUNTED ATTENUATOR (TMA)
6161007		SPEED LIMIT AND STROBE LIGHT ASSEMBLY
6161008		ADVANCED WARNING RAIL SYSTEM
6161009		FLAG ASSEMBLY
6161020		CHANNELIZER (DRUM-LIKE)
6161022		CHANNELIZER (CONES)
6161024		CHANNELIZER (TRIM LINE) WITH LIGHT
6161025	260	CHANNELIZER (TRIM LINE)
6161026		CHANNELIZER (VERTICAL PANEL)
6161027		CHANNELIZER (VERTICAL PANEL) WITH LIGHT
6161028		CHANNELIZER
6161030		TYPE III MOVEABLE BARRICADE
6161031	9	TYPE III MOVEABLE BARRICADE WITH LIGHT
6161033		DIRECTION INDICATOR BARRICADE
6161034		DIRECTION INDICATOR BARRICADE, WITH LIGHT
6161040		FLASHING ARROW PANEL
6161047		TYPE III OBJECT MARKER
6161051		WARNING LIGHT, TYPE A
6161052		WARNING LIGHT, TYPE B
6161053		WARNING LIGHT, TYPE C
6161055		SEQUENTIAL FLASHING WARNING LIGHT
6161070		TUBULAR MARKER
6161095		RADAR SPEED ADVISORY SYSTEM
6161096		CHANGEABLE MESSAGE SIGN, COMMISSION FURNISHED/RETAINED
6161098A	2	CHANGEABLE MESSAGE SIGN, W/O COMMUNICATION INTERFACE, CONTRACTOR FURNISHED/RETAINED
6161100		CHANGEABLE MESSAGE SIGN, CONTRACTOR FURNISHED/COMMISSION RETAINED
6173600D		CONTRACTOR FURNISHED/RETAINED TEMPORARY TRAFFIC BARRIER
6173602B		CONTRACTOR FURNISHED/COMMISSION RETAINED TEMPORARY TRAFFIC BARRIER
6174000A		TEMPORARY TRAFFIC BARRIER HEIGHT TRANSITION
6175010A		RELOCATING TEMPORARY TRAFFIC BARRIER
6176000B		COMMISSION FURNISHED/RETAINED TEMPORARY TRAFFIC BARRIER
6177000B		COMMISSION FURNISHED/RETAINED TEMPORARY TRAFFIC BARRIER HEIGHT TRANSITION
9019400		TEMPORARY LIGHTING
9029400		TEMPORARY TRAFFIC SIGNALS
9029401		TEMPORARY TRAFFIC SIGNALS AND LIGHTING

SUMMARY OF QUANTITIES
SHEET 11 OF 11

STATE OF MISSOURI
RICHARD S. BAUM
NUMBER E-24320
REGISTERED PROFESSIONAL ENGINEER

DATE PREPARED
03-NOV-2016

ROUTE	STATE
21	MO
DISTRICT	SHEET NO.
SL	3

COUNTY
JEFFERSON

JOB NO.
PW17039RDW

CONTRACT ID.

PROJECT NO.

BRIDGE NO.

DESCRIPTION

DATE

JEFFERSON COUNTY
PUBLIC WORKS DEPARTMENT
P.O. BOX 100
HILLSBORO, MO 63050
(636-797-5340)
www.jeffcomo.org

JACOBS ENGINEERING GROUP INC.
ST. LOUIS, MISSOURI
PHONE
CERTIFICATE OF AUTHORITY

GENERAL NOTES:

1. ANY WORK INDICATED ON THE PLANS THAT EXTENDS BEYOND THE PROJECT LIMITS IS CONSIDERED INCIDENTAL TO AND NOT A PART OF THE CONSTRUCTION OF THIS PROJECT.

2. THE EXISTING CENTERLINE OF OLD STATE ROUTE 21 HAS BEEN RE-CREATED FROM AS-BUILT PLANS AND PROVIDED BY:

   HURST-ROSCHE, INC.
   3675 WEST OUTER ROAD, SUITE 101
   ARNOLD, MISSOURI 63010
   636-333-3351

3. THE PROJECT COORDINATE SYSTEM IS TIED TO STATE PLANE MONUMENT STATION NAMED "ROCK".

4. NO DIRECT PAYMENT WILL BE MADE FOR SAWCUTS ASSOCIATED WITH THE REMOVAL OF THE EXISTING SHOULDERS. THE COST WILL BE CONSIDERED INCIDENTAL AND INCLUDED IN OTHER ITEMS.

5. SEE PAVEMENT EDGE DETAIL ON TYPICAL SECTIONS SHEET 2 OF 2 FOR LOCATION OF 4" SOLID WHITE EDGE STRIPE.

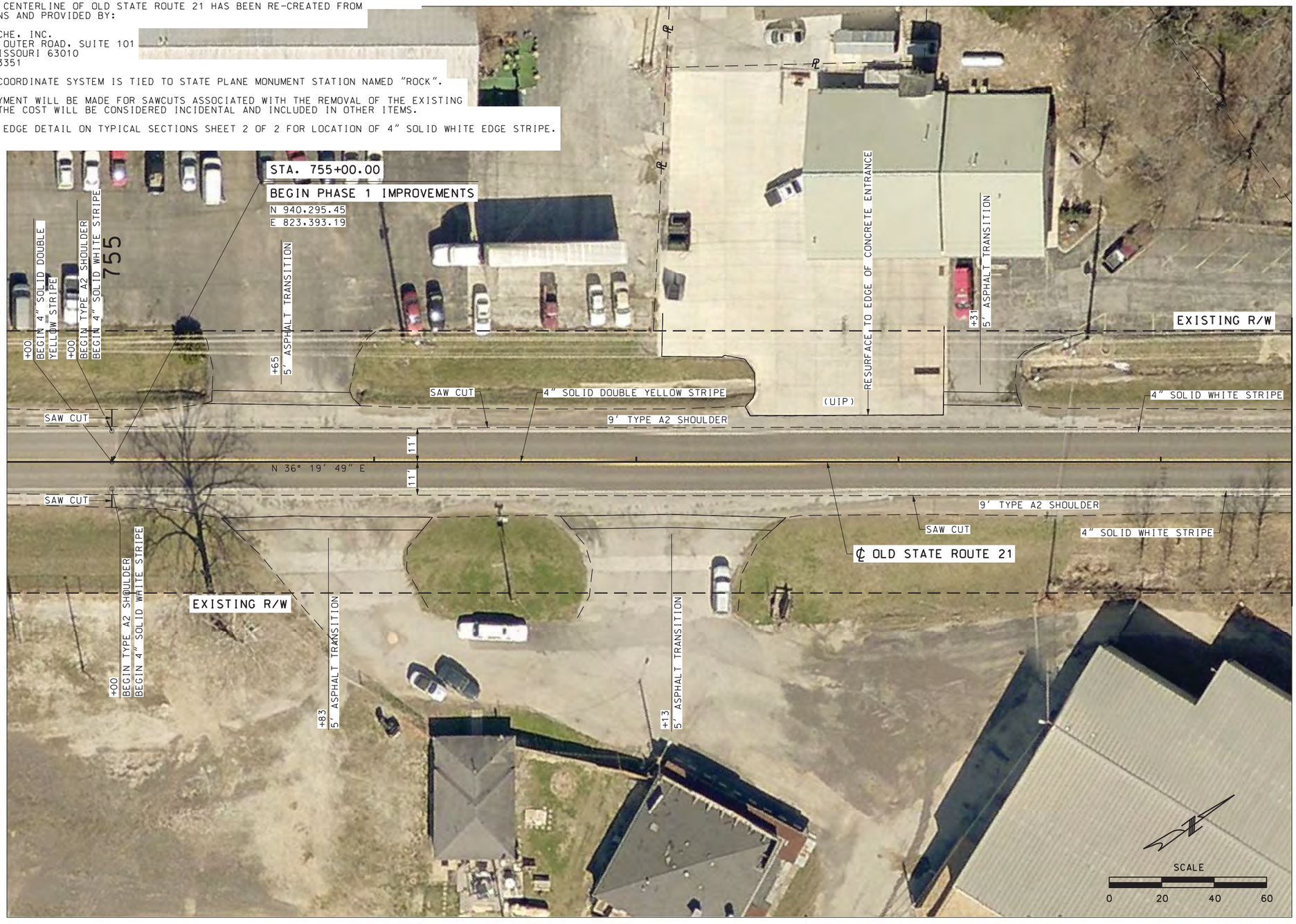

STATE OF MISSOURI
RICHARD S. BAUM
NUMBER E-24320
PROFESSIONAL ENGINEER

DATE PREPARED	
03-NOV-2016	
ROUTE 21	STATE MO
DISTRICT SL	SHEET NO. 4
COUNTY JEFFERSON	
JOB NO. PW17039RDW	
CONTRACT ID.	
PROJECT NO.	
BRIDGE NO.	

DATE	DESCRIPTION

JEFFERSON COUNTY
PUBLIC WORKS DEPARTMENT

P.O. BOX 100
HILLSBORO, MO 63050
(636-797-5340)
www.jeffcomo.org

JACOBS ENGINEERING GROUP INC.
ST. LOUIS, MO
PHONE
CERTIFICATE

SCALE

0 20 40 60

STATE OF MISSOURI
RICHARD S. BAUM
NUMBER E-24320
REGISTERED PROFESSIONAL ENGINEER

DATE PREPARED	03-NOV-2016
ROUTE	21
STATE	MO
DISTRICT	SL
SHEET NO.	5
COUNTY	JEFFERSON
JOB NO.	PW17039RDW
CONTRACT ID.	
PROJECT NO.	
BRIDGE NO.	

DATE	DESCRIPTION

JEFFERSON COUNTY
PUBLIC WORKS DEPARTMENT

P.O. BOX 100
HILLSBORO, MO 63050
(636-797-5340)
www.jeffcomo.org

JACOBS ENGINEERING GROUP INC.
ST. LOUIS, MO
PHONE
CERTIFICATE

OLD STATE ROUTE 21

P.I. 767+78.85
N - 941,325.72
E - 824,150.83
Δ - 36°00'00"
Dc - 3°59'57"
Ts - 565.87'
Lc - 700.19'
Rc - 1432.69'
SE - match exist.
Ds - 3°59'57"
Xc - 199.90'
Yc - 4.65'

SCALE

0 20 40 60

STATE OF MISSOURI
RICHARD S. BAUM
NUMBER E-24320
PROFESSIONAL ENGINEER

DATE PREPARED	03-NOV-2016
ROUTE	21
STATE	MO
DISTRICT	SL
SHEET NO.	6
COUNTY	JEFFERSON
JOB NO.	PW17039RDW
CONTRACT ID.	
PROJECT NO.	
BRIDGE NO.	

DATE	DESCRIPTION

JEFFERSON COUNTY
PUBLIC WORKS DEPARTMENT

P.O. BOX 100
HILLSBORO, MO 63050
(636-797-5340)
www.jeffcomo.org

JACOBS ENGINEERING GROUP INC.
701 N. 15TH STREET
ST. LOUIS, MO 63103
PHONE: 314-335-4000
CERTIFICATE OF AUTHORITY: E-2008-0159

SCALE

0 20 40 60

STATE OF MISSOURI
RICHARD S. BAUM
NUMBER E-24320
PROFESSIONAL ENGINEER

DATE PREPARED	03-NOV-2016
ROUTE	21
STATE	MO
DISTRICT	SL
SHEET NO.	7
COUNTY	JEFFERSON
JOB NO.	PW17039RDW
CONTRACT ID.	
PROJECT NO.	
BRIDGE NO.	

DATE	DESCRIPTION

JEFFERSON COUNTY
PUBLIC WORKS DEPARTMENT

P.O. BOX 100
HILLSBORO, MO 63050
(636-797-5340)
www.jeffcomo.org

JACOBS ENGINEERING GROUP INC.
ST. LOUIS, MO
PHONE:
CERTIFICATE OF AUTHORITY

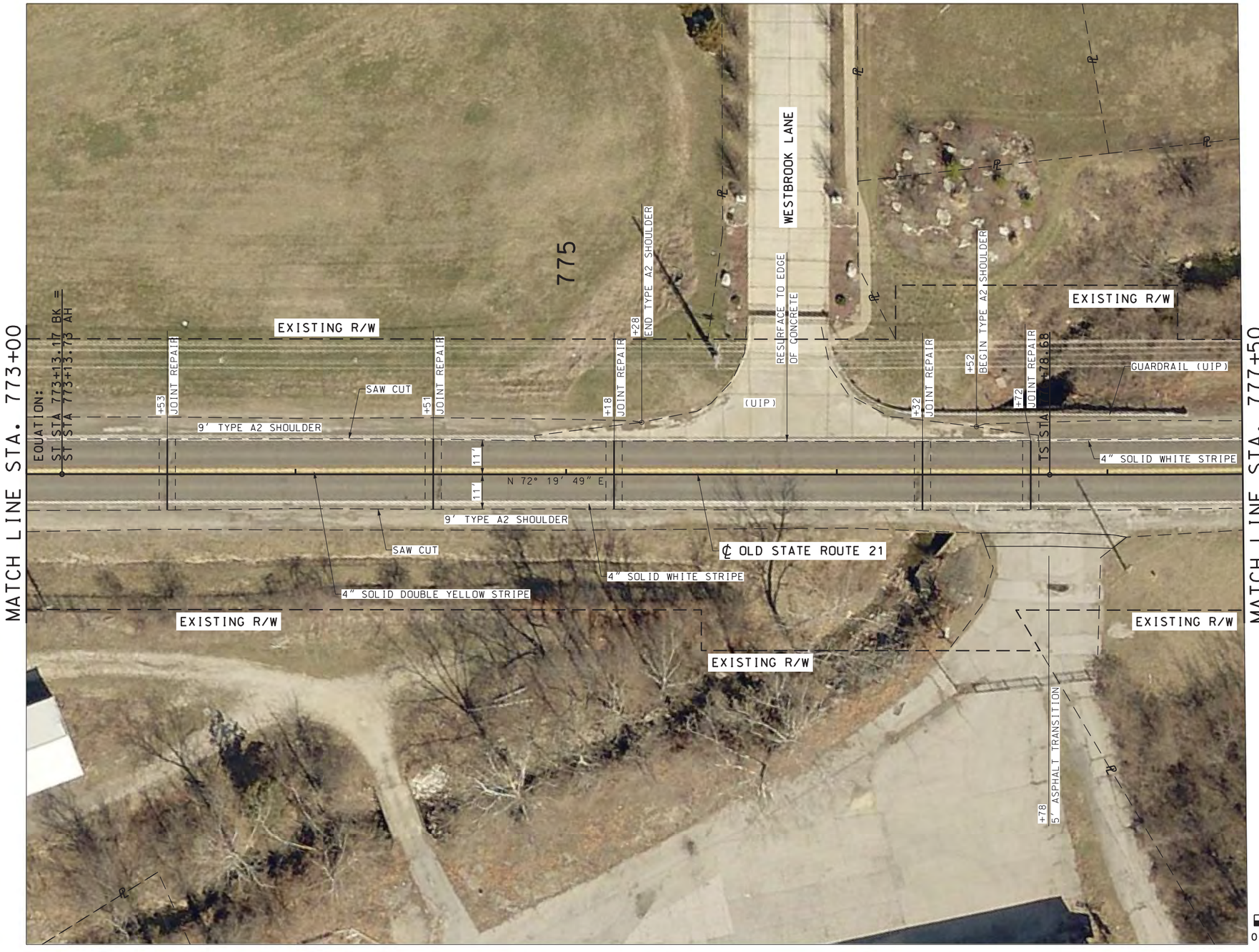

STATE OF MISSOURI
RICHARD S. BAUM
NUMBER E-24320
REGISTERED PROFESSIONAL ENGINEER

DATE PREPARED	03-NOV-2016
ROUTE	21
STATE	MO
DISTRICT	SL
SHEET NO.	8
COUNTY	JEFFERSON
JOB NO.	PW17039RDW
CONTRACT ID.	
PROJECT NO.	
BRIDGE NO.	

DATE	DESCRIPTION

JEFFERSON COUNTY
PUBLIC WORKS DEPARTMENT

P.O. BOX 100
HILLSBORO, MO 63050
(636-797-5340)
www.jeffcomo.org

JACOBS
501 NORTH
ST. LOUIS
PHONE
CERTIFICATE

SCALE

0 20 40 60

OLD STATE ROUTE 21

P.I. 781+00.01
N - 941,736.13
E - 825,439.19
Δ - 31°17'00"
Dc - 4°59'54"
Ts - 421.33'
Lc - 425.87'
Rc - 1146.28'
SE - match exist.
Os - 4°59'54"
Xc - 199.85'
Yc - 5.81'

STATE OF MISSOURI
RICHARD S. BAUM
NUMBER E-24320
REGISTERED PROFESSIONAL ENGINEER

DATE PREPARED
03-NOV-2016

ROUTE	STATE
21	MO
DISTRICT	SHEET NO.
SL	9

COUNTY
JEFFERSON

JOB NO.
PW17039RDW

CONTRACT ID.

PROJECT NO.

BRIDGE NO.

DATE	DESCRIPTION

JEFFERSON COUNTY
PUBLIC WORKS DEPARTMENT

P.O. BOX 100
HILLSBORO, MO 63050
(636-797-5340)
www.jeffcomo.org

JACOBS ENGINEERING GROUP INC.
ST. LOUIS, MO
PHONE
CERTIFICATE OF AUTHORITY

SCALE

0 20 40 60

STATE OF MISSOURI
RICHARD S. BAUM
NUMBER E-24320
PROFESSIONAL ENGINEER

DATE PREPARED	03-NOV-2016
ROUTE	21
STATE	MO
DISTRICT	SL
SHEET NO.	10
COUNTY	JEFFERSON
JOB NO.	PW17039RDW
CONTRACT ID.	
PROJECT NO.	
BRIDGE NO.	

DATE	DESCRIPTION

JEFFERSON COUNTY
PUBLIC WORKS DEPARTMENT

P.O. BOX 100
HILLSBORO, MO 63050
(636-797-5340)
www.jeffcomo.org

JACOBS ENGINEERING GROUP INC.
ST. LOUIS, MO
PHONE:
CERTIFICATE

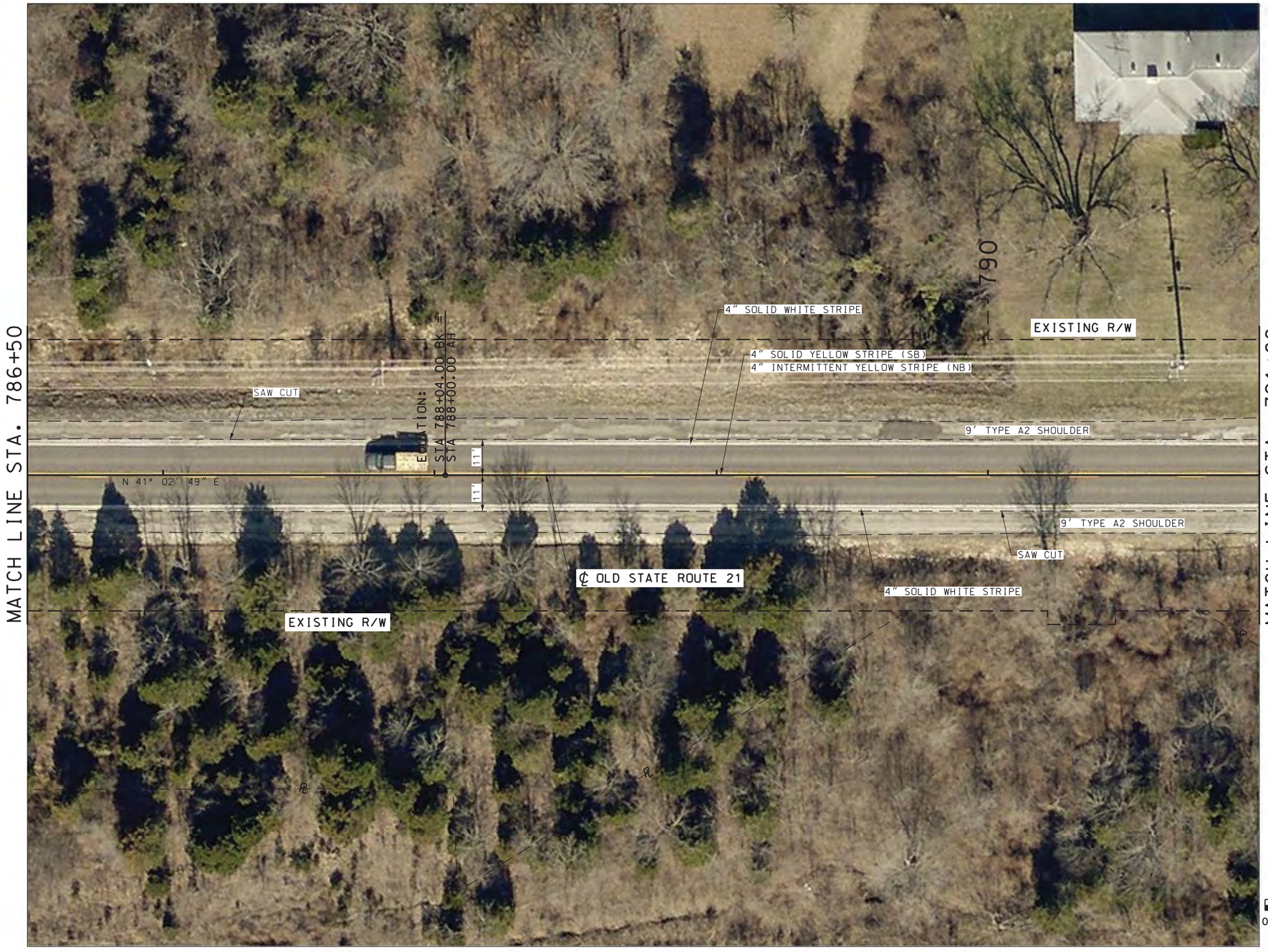

SCALE

0 20 40 60

STATE OF MISSOURI
RICHARD S. BAUM
NUMBER E-24320
PROFESSIONAL ENGINEER

DATE PREPARED	03-NOV-2016
ROUTE	21
STATE	MO
DISTRICT	SL
SHEET NO.	11
COUNTY	JEFFERSON
JOB NO.	PW17039RDW
CONTRACT ID.	
PROJECT NO.	
BRIDGE NO.	

DATE	DESCRIPTION

JEFFERSON COUNTY
PUBLIC WORKS DEPARTMENT

P.O. BOX 100
HILLSBORO, MO 63050
(636-797-5340)
www.jeffcomo.org

JACOBS ENGINEERING GROUP INC.
ST. LOUIS, MISSOURI
PHONE
CERTIFICATE

SCALE

0 20 40 60

STATE OF MISSOURI
RICHARD S. BAUM
NUMBER E-24320
PROFESSIONAL ENGINEER

DATE PREPARED	03-NOV-2016
ROUTE	21
STATE	MO
DISTRICT	SL
SHEET NO.	12
COUNTY	JEFFERSON
JOB NO.	PW17039RDW
CONTRACT ID.	
PROJECT NO.	
BRIDGE NO.	

DATE	DESCRIPTION

JEFFERSON COUNTY
PUBLIC WORKS DEPARTMENT

P.O. BOX 100
HILLSBORO, MO 63050
(636-797-5340)
www.jeffcomo.org

JACOBS ENGINEERING GROUP INC.
ST. LOUIS, MO
PHONE
CERTIFICATE

SCALE

0 20 40 60

STATE OF MISSOURI
RICHARD S. BAUM
NUMBER E-24320
PROFESSIONAL ENGINEER

DATE PREPARED	03-NOV-2016
ROUTE	21
STATE	MO
DISTRICT	SL
SHEET NO.	13
COUNTY	JEFFERSON
JOB NO.	PW17039RDW
CONTRACT ID.	
PROJECT NO.	
BRIDGE NO.	

DATE	DESCRIPTION

JEFFERSON COUNTY
PUBLIC WORKS DEPARTMENT

P.O. BOX 100
HILLSBORO, MO 63050
(636-797-5340)
www.jeffcomo.org

JACOBS ENGINEERING GROUP INC.
ST. LOUIS, MO
PHONE
CERTIFICATE

STATE OF MISSOURI
RICHARD S. BAUM
NUMBER E-24320
REGISTERED PROFESSIONAL ENGINEER

DATE PREPARED	03-NOV-2016
ROUTE	21
STATE	MO
DISTRICT	SL
SHEET NO.	14
COUNTY	JEFFERSON
JOB NO.	PW17039RDW
CONTRACT ID.	
PROJECT NO.	
BRIDGE NO.	

DATE	DESCRIPTION

JEFFERSON COUNTY
PUBLIC WORKS DEPARTMENT

P.O. BOX 100
HILLSBORO, MO 63050
(636-797-5340)
www.jeffcomo.org

JACOBS ENGINEERING GROUP INC.
ST. LOUIS, MO
PHONE
CERTIFICATE

STATE OF MISSOURI
RICHARD S. BAUM
NUMBER E-24320
REGISTERED PROFESSIONAL ENGINEER

DATE PREPARED	03-NOV-2016
ROUTE	21
STATE	MO
DISTRICT	SL
SHEET NO.	15
COUNTY	JEFFERSON
JOB NO.	PW17039RDW
CONTRACT ID.	
PROJECT NO.	
BRIDGE NO.	

DATE	DESCRIPTION

JEFFERSON COUNTY
PUBLIC WORKS DEPARTMENT

P.O. BOX 100
HILLSBORO, MO 63050
(636-797-5340)
www.jeffcomo.org

JACOBS
JACOBS ENGINEERING GROUP INC.
ST. LOUIS, MISSOURI
PHONE
CERTIFICATE OF AUTHORITY

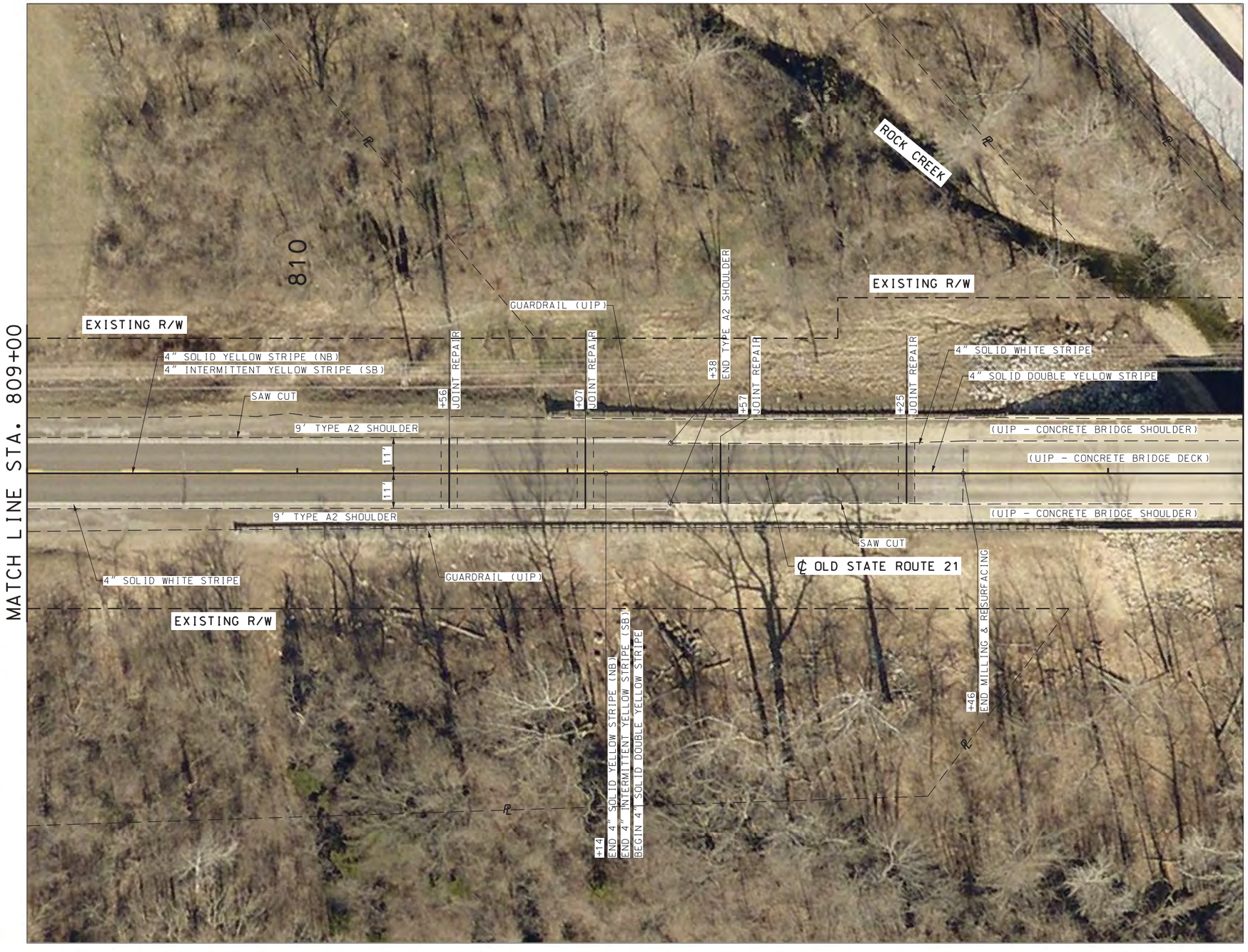

DATE PREPARED	03-NOV-2016
ROUTE	21
STATE	MO
DISTRICT	SL
SHEET NO.	16
COUNTY	JEFFERSON
JOB NO.	PW17039RDW
CONTRACT ID.	
PROJECT NO.	
BRIDGE NO.	

DATE	DESCRIPTION

JEFFERSON COUNTY
PUBLIC WORKS DEPARTMENT

P.O. BOX 100
HILLSBORO, MO 63050
(636-797-5340)
www.jeffcomo.org

JACOBS ENGINEERING GROUP INC.
701 NORTH 15TH STREET
ST. LOUIS, MO 63103
PHONE: 314-335-4800
CERTIFICATE OF AUTHORITY NUMBER: E-2004000163

STATE OF MISSOURI
RICHARD S. BAUM
NUMBER E-24320
PROFESSIONAL ENGINEER
REGISTERED

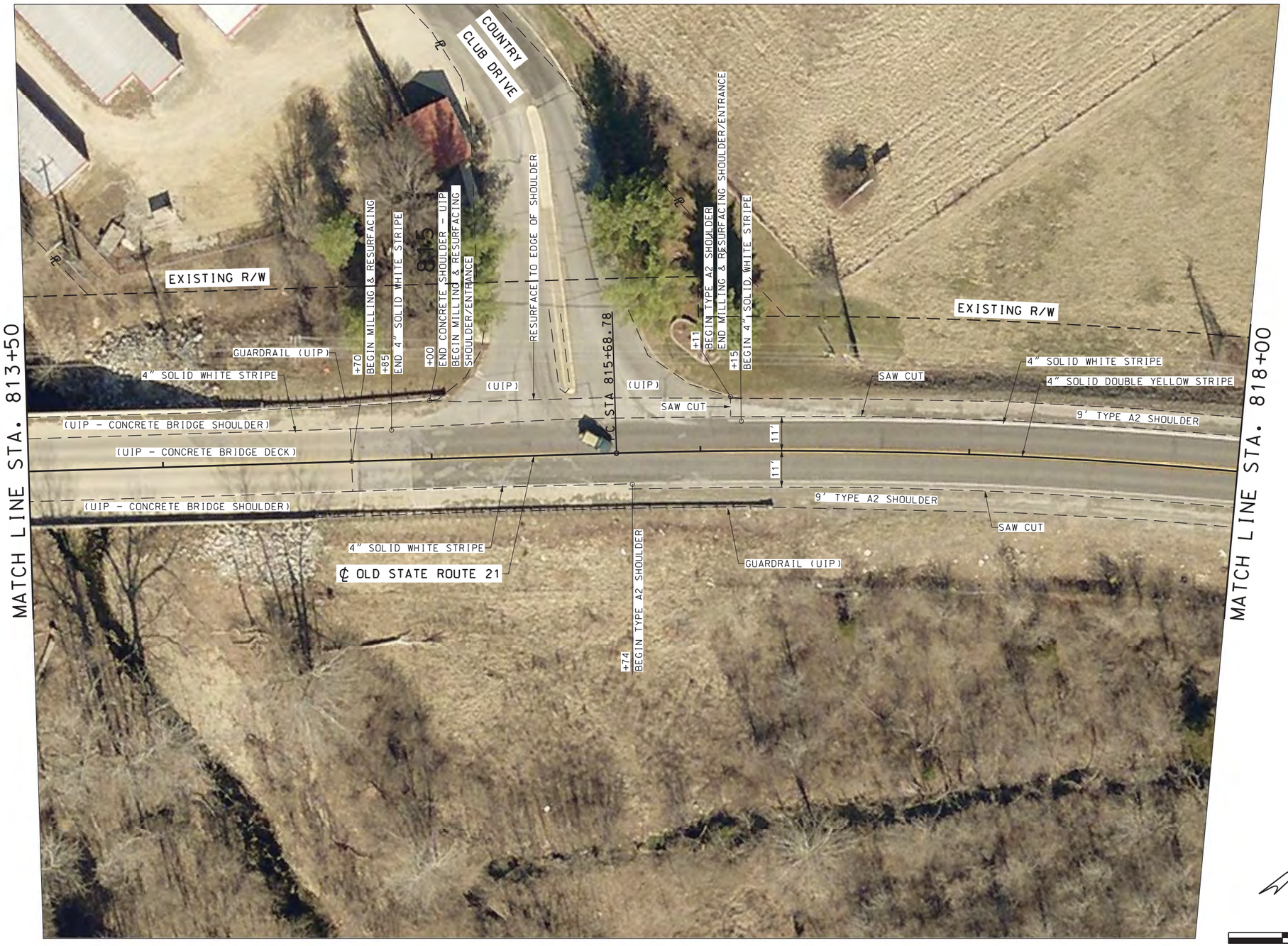

SCALE

0 20 40 60

REGISTERED STATE OF MISSOURI RICHARD S. BAUM NUMBER E-24320 PROFESSIONAL ENGINEER

DATE PREPARED	03-NOV-2016
ROUTE	21
STATE	MO
DISTRICT	SL
SHEET NO.	17
COUNTY	JEFFERSON
JOB NO.	PW17039RDW
CONTRACT ID.	
PROJECT NO.	
BRIDGE NO.	

DATE	DESCRIPTION

JEFFERSON COUNTY
PUBLIC WORKS DEPARTMENT

P.O. BOX 100
HILLSBORO, MO 63050
(636-797-5340)
www.jeffcomo.org

JACOBS ENGINEERING GROUP INC.
ST. LOUIS, MO
PHONE
CERTIFICATE

OLD STATE ROUTE 21

P.I. 821+75.00
N - 944,820.30
E - 828,124.65
Δ - 35°13'00"
D - 2°59'59"
T - 606.22'
L - 1174.02'
R - 1910.08'
SE - match exist.
W - n/a

STATE OF MISSOURI
RICHARD S. BAUM
NUMBER E-24320
PROFESSIONAL ENGINEER

DATE PREPARED	03-NOV-2016
ROUTE	21
STATE	MO
DISTRICT	SL
SHEET NO.	18
COUNTY	JEFFERSON
JOB NO.	PW17039RDW
CONTRACT ID.	
PROJECT NO.	
BRIDGE NO.	

DATE	DESCRIPTION

JEFFERSON COUNTY
PUBLIC WORKS DEPARTMENT

P.O. BOX 100
HILLSBORO, MO 63050
(636-797-5340)
www.jeffcomo.org

JACOBS ENGINEERING GROUP INC.
ST. LOUIS, MO
PHONE
CERTIFICATE OF AUTHORITY

STATE OF MISSOURI
RICHARD S. BAUM
NUMBER E-24320
REGISTERED PROFESSIONAL ENGINEER

DATE PREPARED	03-NOV-2016
ROUTE	21
STATE	MO
DISTRICT	SL
SHEET NO.	19
COUNTY	JEFFERSON
JOB NO.	PW17039RDW
CONTRACT ID.	
PROJECT NO.	
BRIDGE NO.	

DATE	DESCRIPTION

JEFFERSON COUNTY
PUBLIC WORKS DEPARTMENT

P.O. BOX 100
HILLSBORO, MO 63050
(636-797-5340)
www.jeffcomo.org

JACOBS ENGINEERING GROUP INC.
ST. LOUIS, MO
PHONE
CERTIFICATE OF AUTHORITY

STATE OF MISSOURI
RICHARD S. BAUM
NUMBER E-24320
REGISTERED PROFESSIONAL ENGINEER

DATE PREPARED	03-NOV-2016
ROUTE	21
STATE	MO
DISTRICT	SL
SHEET NO.	20
COUNTY	JEFFERSON
JOB NO.	PW17039RDW
CONTRACT ID.	
PROJECT NO.	
BRIDGE NO.	

DATE	DESCRIPTION

JEFFERSON COUNTY
PUBLIC WORKS DEPARTMENT

P.O. BOX 100
HILLSBORO, MO 63050
(636-797-5340)
www.jeffcomo.org

JACOBS ENGINEERING GROUP INC.
ST. LOUIS, MO
PHONE: 314-335-4800
CERTIFICATE OF AUTHORITY NO. E-2001000172

SCALE

0 20 40 60

STATE OF MISSOURI
RICHARD S. BAUM
NUMBER E-24320
PROFESSIONAL ENGINEER

DATE PREPARED	03-NOV-2016
ROUTE	21
STATE	MO
DISTRICT	SL
SHEET NO.	21
COUNTY	JEFFERSON
JOB NO.	PW17039RDW
CONTRACT ID.	
PROJECT NO.	
BRIDGE NO.	

DATE	DESCRIPTION

JEFFERSON COUNTY
PUBLIC WORKS DEPARTMENT

P.O. BOX 100
HILLSBORO, MO 63050
(636-797-5340)
www.jeffcomo.org

JACOBS ENGINEERING GROUP INC.
ST. LOUIS, MO
PHONE
CERTIFICATE OF AUTHORITY

STATE OF MISSOURI
RICHARD S. BAUM
NUMBER E-24320
REGISTERED PROFESSIONAL ENGINEER

DATE PREPARED	03-NOV-2016
ROUTE 21	STATE MO
DISTRICT SL	SHEET NO. 22
COUNTY	JEFFERSON
JOB NO.	PW17039RDW
CONTRACT ID.	
PROJECT NO.	
BRIDGE NO.	

DATE	DESCRIPTION

JEFFERSON COUNTY
PUBLIC WORKS DEPARTMENT

P.O. BOX 100
HILLSBORO, MO 63050
(636-797-5340)
www.jeffcomo.org

JACOBS ENGINEERING GROUP INC.
ST. LOUIS, MO
PHONE
CERTIFICATE

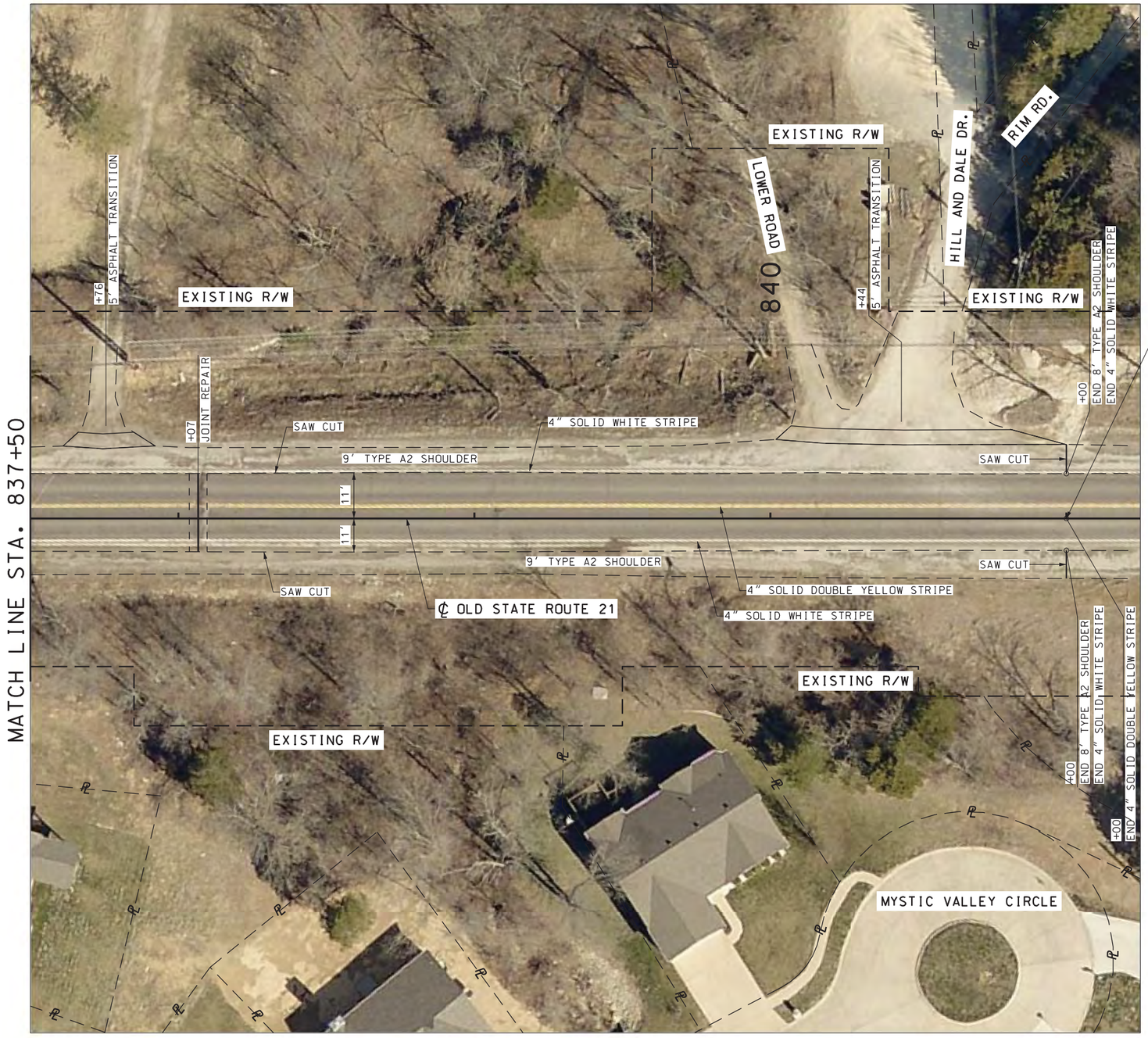

STA. 841+00.00

BEGIN EXCEPTION -

PHASE 4 (BY OTHERS)

N 945,356.54
E 830,318.37

SCALE

0 20 40 60

STATE OF MISSOURI
RICHARD S. BAUM
NUMBER E-24320
PROFESSIONAL ENGINEER

DATE PREPARED	03-NOV-2016
ROUTE	21
STATE	MO
DISTRICT	SL
SHEET NO.	23
COUNTY	JEFFERSON
JOB NO.	PW17039RDW
CONTRACT ID.	
PROJECT NO.	
BRIDGE NO.	

DATE	DESCRIPTION

JEFFERSON COUNTY
PUBLIC WORKS DEPARTMENT

P.O. BOX 100
HILLSBORO, MO 63050
(636-797-5340)
www.jeffcomo.org

JACOBS ENGINEERING GROUP INC.
ST. LOUIS, MO
PHONE
CERTIFICATE

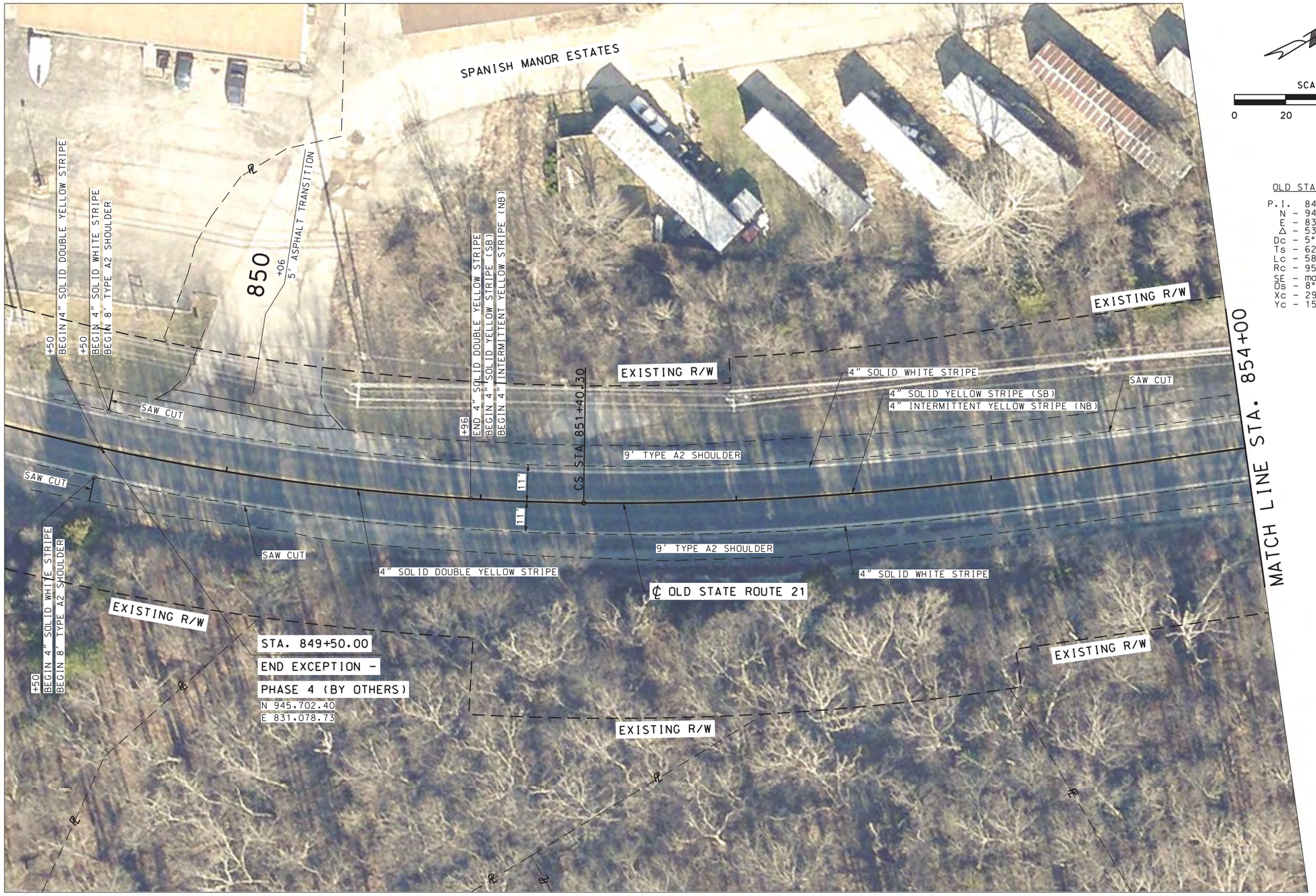

SCALE

0 20 40 60

OLD STATE ROUTE 21

P.I. 848+83.99
N - 945,542.71
E - 831,079.94
Δ - 53°07'00"
Dc - 5°59'50"
Ts - 629.38'
Lc - 585.69'
Rc - 955.37'
SE - match exist.
Os - 8°59'45"
Xc - 299.26'
Yc - 15.67'

STATE OF MISSOURI
RICHARD S. BAUM
NUMBER E-24320
REGISTERED PROFESSIONAL ENGINEER

DATE PREPARED	
03-NOV-2016	
ROUTE 21	STATE MO
DISTRICT SL	SHEET NO. 24
COUNTY JEFFERSON	
JOB NO. PW17039RDW	
CONTRACT ID.	
PROJECT NO.	
BRIDGE NO.	

DATE	DESCRIPTION

JEFFERSON COUNTY
PUBLIC WORKS DEPARTMENT

P.O. BOX 100
HILLSBORO, MO 63050
(636-797-5340)
www.jeffcomo.org

JACOBS ENGINEERING GROUP INC.
701 NORTH 15TH STREET
ST. LOUIS, MO 63103
PHONE: 314-335-4000
CERTIFICATE OF AUTHORITY NO. E-2001000172

SCALE

0 20 40 60

STATE OF MISSOURI
RICHARD S. BAUM
NUMBER E-24320
PROFESSIONAL ENGINEER

DATE PREPARED	03-NOV-2016
ROUTE	21
STATE	MO
DISTRICT	SL
SHEET NO.	25
COUNTY	JEFFERSON
JOB NO.	PW17039RDW
CONTRACT ID.	
PROJECT NO.	
BRIDGE NO.	

DATE	DESCRIPTION

JEFFERSON COUNTY
PUBLIC WORKS DEPARTMENT

P.O. BOX 100
HILLSBORO, MO 63050
(636-797-5340)
www.jeffcomo.org

JACOBS ENGINEERING GROUP INC.
ST. LOUIS, MO
PHONE:
CERTIFICATE OF AUTHORITY

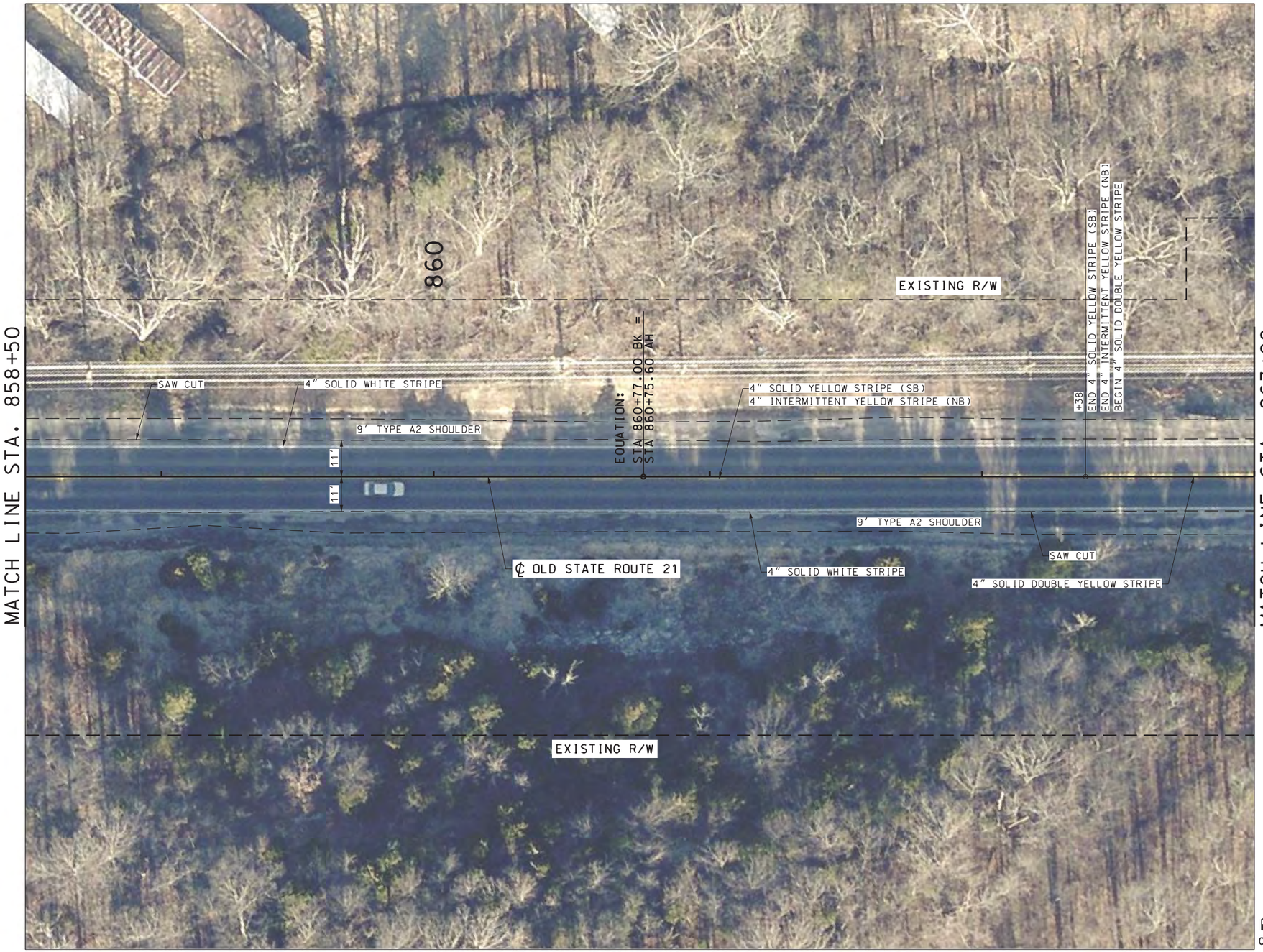

SCALE

0 20 40 60

STATE OF MISSOURI
RICHARD S. BAUM
NUMBER E-24320
PROFESSIONAL ENGINEER

DATE PREPARED	03-NOV-2016
ROUTE 21	STATE MO
DISTRICT SL	SHEET NO. 26
COUNTY	JEFFERSON
JOB NO.	PW17039RDW
CONTRACT ID.	
PROJECT NO.	
BRIDGE NO.	

DATE	DESCRIPTION

JEFFERSON COUNTY
PUBLIC WORKS DEPARTMENT

P.O. BOX 100
HILLSBORO, MO 63050
(636-797-5340)
www.jeffcomo.org

JACOBS ENGINEERING GROUP INC.
ST. LOUIS, MO
PHONE: [redacted]
CERTIFICATE OF AUTHORITY: [redacted]

SCALE

0 20 40 60

STATE OF MISSOURI
RICHARD S. BAUM
NUMBER E-24320
PROFESSIONAL ENGINEER

DATE PREPARED	
03-NOV-2016	
ROUTE 21	STATE MO
DISTRICT SL	SHEET NO. 27
COUNTY JEFFERSON	
JOB NO. PW17039RDW	
CONTRACT ID.	
PROJECT NO.	
BRIDGE NO.	

DATE	DESCRIPTION

JEFFERSON COUNTY
PUBLIC WORKS DEPARTMENT

P.O. BOX 100
HILLSBORO, MO 63050
(636-797-5340)
www.jeffcomo.org

JACOBS ENGINEERING GROUP INC.
ST. LOUIS, MO
PHONE: 314-335-4800
CERTIFICATE OF AUTHORITY NUMBER: E-2001000162

SCALE

0 20 40 60

STATE OF MISSOURI
RICHARD S. BAUM
NUMBER E-24320
REGISTERED PROFESSIONAL ENGINEER

DATE PREPARED	03-NOV-2016
ROUTE	21
STATE	MO
DISTRICT	SL
SHEET NO.	28
COUNTY	JEFFERSON
JOB NO.	PW17039RDW
CONTRACT ID.	
PROJECT NO.	
BRIDGE NO.	

DATE	DESCRIPTION

JEFFERSON COUNTY
PUBLIC WORKS DEPARTMENT

P.O. BOX 100
HILLSBORO, MO 63050
(636-797-5340)
www.jeffcomo.org

JACOBS ENGINEERING GROUP INC.
701 N. 15TH ST.
ST. LOUIS, MO 63103
PHONE: 314-335-4800
CERTIFICATE OF AUTHORITY NO. E-2008000102

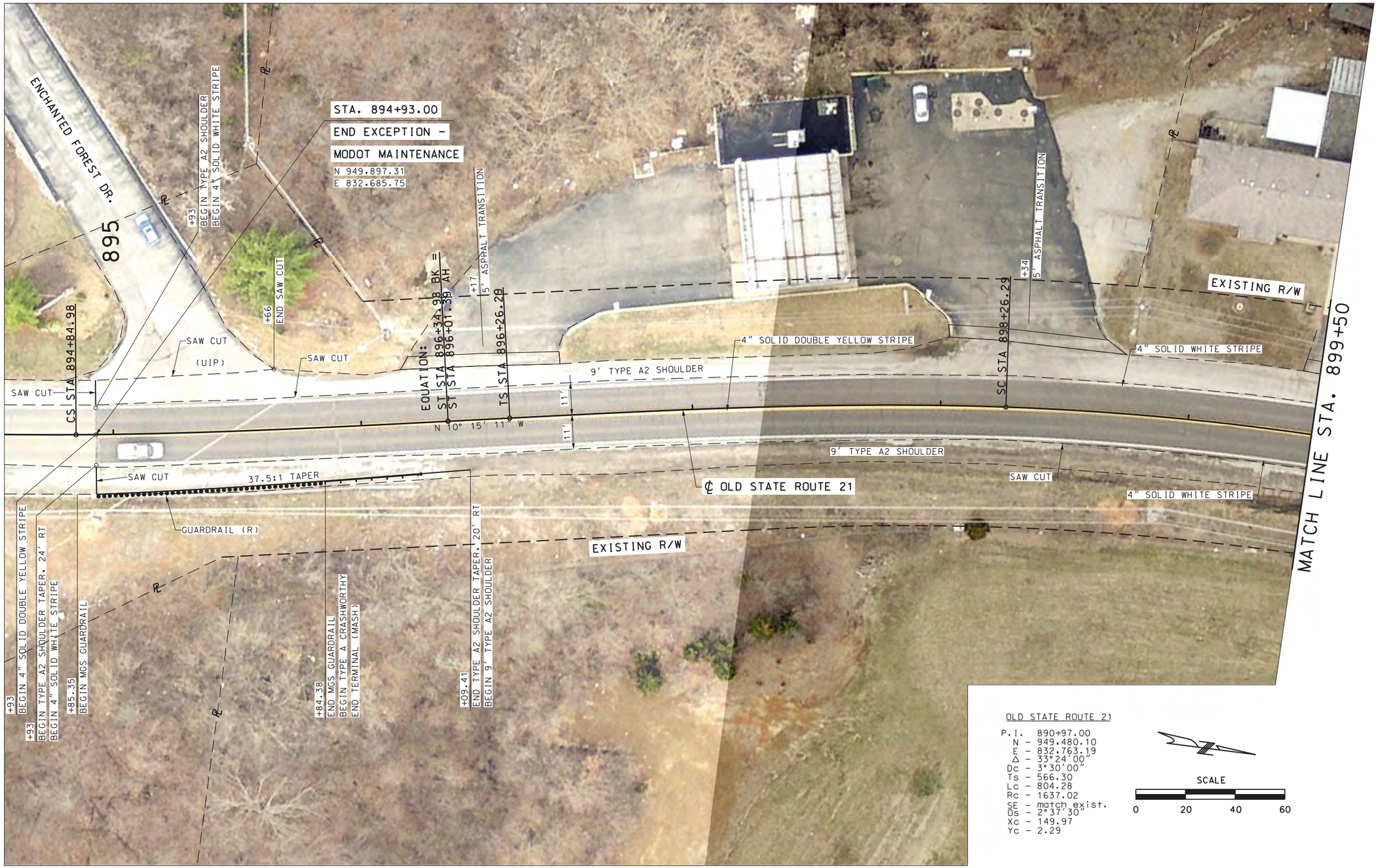

OLD STATE ROUTE 21

P.I. 890+97.00
N - 949.480.10
E - 832.763.19
Δ - 33°24'00"
Dc - 3°30'00"
Ts - 566.30
Lc - 804.28
Rc - 1637.02
SE - match exist.
Ds - 2°37'30"
Xc - 149.97
Yc - 2.29

SCALE

0 20 40 60

STATE OF MISSOURI
RICHARD S. BAUM
NUMBER E-24320
PROFESSIONAL ENGINEER

DATE PREPARED
03-NOV-2016

ROUTE	STATE
21	MO
DISTRICT	SHEET NO.
SL	29

COUNTY
JEFFERSON

JOB NO.
PW17039RDW

CONTRACT ID.

PROJECT NO.

BRIDGE NO.

DATE	DESCRIPTION

JEFFERSON COUNTY
PUBLIC WORKS DEPARTMENT

P.O. BOX 100
HILLSBORO, MO 63050
(636-797-5340)
www.jeffcomo.org

JACOBS ENGINEERING GROUP INC.
ST. LOUIS, MO
PHONE
CERTIFICATE OF AUTHORITY

STATE OF MISSOURI
RICHARD S. BAUM
NUMBER E-24320
REGISTERED PROFESSIONAL ENGINEER

DATE PREPARED	03-NOV-2016
ROUTE	21
STATE	MO
DISTRICT	SL
SHEET NO.	30
COUNTY	JEFFERSON
JOB NO.	PW17039RDW
CONTRACT ID.	
PROJECT NO.	
BRIDGE NO.	

DATE	DESCRIPTION

JEFFERSON COUNTY
PUBLIC WORKS DEPARTMENT

P.O. BOX 100
HILLSBORO, MO 63050
(636-797-5340)
www.jeffcomo.org

[redacted]

JACOBS ENGINEERING GROUP INC.
ST. LOUIS, MO
PHONE:
CERTIFICATE OF AUTHORITY

OLD STATE ROUTE 21

P.I. 905+50.24
N - 950,971.04
E - 832,493.50
Δ - 71°21'00"
Dc - 4°59'54"
Ts - 923.95'
Lc - 1227.45'
Rc - 1146.28'
SE - match exist.
OS - 4°59'54"
Xc - 199.85'
Yc - 5.81'

SCALE

0 20 40 60

STATE OF MISSOURI
RICHARD S. BAUM
NUMBER E-24320
REGISTERED PROFESSIONAL ENGINEER

DATE PREPARED	03-NOV-2016
ROUTE	21
STATE	MO
DISTRICT	SL
SHEET NO.	31
COUNTY	JEFFERSON
JOB NO.	PW17039RDW
CONTRACT ID.	
PROJECT NO.	
BRIDGE NO.	

DATE	DESCRIPTION

JEFFERSON COUNTY
PUBLIC WORKS DEPARTMENT

P.O. BOX 100
HILLSBORO, MO 63050
(636-797-5340)
www.jeffcomo.org

JACOBS ENGINEERING GROUP INC.
ST. LOUIS, MO
PHONE
CERTIFICATE

STATE OF MISSOURI
RICHARD S. BAUM
NUMBER E-24320
REGISTERED PROFESSIONAL ENGINEER

DATE PREPARED	03-NOV-2016
ROUTE	21
STATE	MO
DISTRICT	SL
SHEET NO.	32
COUNTY	JEFFERSON
JOB NO.	PW17039RDW
CONTRACT ID.	
PROJECT NO.	
BRIDGE NO.	

DATE	DESCRIPTION

JEFFERSON COUNTY
PUBLIC WORKS DEPARTMENT

P.O. BOX 100
HILLSBORO, MO 63050
(636-797-5340)
www.jeffcomo.org

JACOBS ENGINEERING GROUP INC.
ST. LOUIS, MO
PHONE
CERTIFICATE

STATE OF MISSOURI
RICHARD S. BAUM
NUMBER E-24320
REGISTERED PROFESSIONAL ENGINEER

DATE PREPARED	03-NOV-2016
ROUTE	21
STATE	MO
DISTRICT	SL
SHEET NO.	33
COUNTY	JEFFERSON
JOB NO.	PW17039RDW
CONTRACT ID.	
PROJECT NO.	
BRIDGE NO.	

DATE	DESCRIPTION

JEFFERSON COUNTY
PUBLIC WORKS DEPARTMENT

P.O. BOX 100
HILLSBORO, MO 63050
(636-797-5340)
www.jeffcomo.org

JACOBS ENGINEERING GROUP INC.
701 NORTH 15TH STREET
ST. LOUIS, MO 63103
PHONE: 314-335-4000
CERTIFICATE OF AUTHORITY NUMBER: E-2008000174

STATE OF MISSOURI
RICHARD S. BAUM
NUMBER E-24320
REGISTERED PROFESSIONAL ENGINEER

DATE PREPARED	03-NOV-2016
ROUTE	21
STATE	MO
DISTRICT	SL
SHEET NO.	34
COUNTY	JEFFERSON
JOB NO.	PW17039RDW
CONTRACT ID.	
PROJECT NO.	
BRIDGE NO.	

DATE	DESCRIPTION

JEFFERSON COUNTY
PUBLIC WORKS DEPARTMENT

P.O. BOX 100
HILLSBORO, MO 63050
(636-797-5340)
www.jeffcomo.org

JACOBS ENGINEERING GROUP INC.
ST. LOUIS, MO
PHONE
CERTIFICATE

SCALE

0 20 40 60

STATE OF MISSOURI
RICHARD S. BAUM
NUMBER E-24320
PROFESSIONAL ENGINEER

DATE PREPARED	03-NOV-2016
ROUTE	21
STATE	MO
DISTRICT	SL
SHEET NO.	35
COUNTY	JEFFERSON
JOB NO.	PW17039RDW
CONTRACT ID.	
PROJECT NO.	
BRIDGE NO.	

DATE	DESCRIPTION

JEFFERSON COUNTY
PUBLIC WORKS DEPARTMENT

P.O. BOX 100
HILLSBORO, MO 63050
(636-797-5340)
www.jeffcomo.org

JACOBS ENGINEERING GROUP INC.
701 NORTH 15TH STREET
ST. LOUIS, MO 63103
PHONE: 314-335-4000
CERTIFICATE OF AUTHORITY NO. E-2001000172

SCALE

0 20 40 60

STATE OF MISSOURI
RICHARD S. BAUM
NUMBER E-24320
REGISTERED PROFESSIONAL ENGINEER

DATE PREPARED	03-NOV-2016
ROUTE	21
STATE	MO
DISTRICT	SL
SHEET NO.	36
COUNTY	JEFFERSON
JOB NO.	PW17039RDW
CONTRACT ID.	
PROJECT NO.	
BRIDGE NO.	

DATE	DESCRIPTION

JEFFERSON COUNTY
PUBLIC WORKS DEPARTMENT

P.O. BOX 100
HILLSBORO, MO 63050
(636-797-5340)
www.jeffcomo.org

JACOBS ENGINEERING GROUP INC.
ST. LOUIS, MO
PHONE: 314-335-4800
CERTIFICATE OF AUTHORITY NO. E-2001000100

SCALE

0 20 40 60

OLD STATE ROUTE 21

P.I. 931+29.51
N - 952,318.02
E - 834,933.24
Δ - 25°18'00"
Dc - 4°59'54"
Ts - 357.58'
Lc - 306.16'
Rc - 1146.28'
SE - match exist.
Os - 4°59'54"
Xc - 199.85'
Yc - 5.81'

STATE OF MISSOURI
RICHARD S. BAUM
NUMBER E-24320
PROFESSIONAL ENGINEER

DATE PREPARED	03-NOV-2016
ROUTE	21
STATE	MO
DISTRICT	SL
SHEET NO.	37
COUNTY	JEFFERSON
JOB NO.	PW17039RDW
CONTRACT ID.	
PROJECT NO.	
BRIDGE NO.	

DATE	DESCRIPTION

JEFFERSON COUNTY
PUBLIC WORKS DEPARTMENT

P.O. BOX 100
HILLSBORO, MO 63050
(636-797-5340)
www.jeffcomo.org

JACOBS ENGINEERING GROUP INC.
ST. LOUIS, MO
PHONE: 314-335-4800
CERTIFICATE OF AUTHORITY

SCALE

0 20 40 60

DATE PREPARED
03-NOV-2016

ROUTE	STATE
21	MO
DISTRICT	SHEET NO.
SL	38

COUNTY
JEFFERSON

JOB NO.
PW17039RDW

CONTRACT ID.

PROJECT NO.

BRIDGE NO.

DATE	DESCRIPTION

JEFFERSON COUNTY
PUBLIC WORKS DEPARTMENT

P.O. BOX 100
HILLSBORO, MO 63050
(636-797-5340)
www.jeffcomo.org

JACOBS ENGINEERING GROUP INC.
101 N. BROADWAY
ST. LOUIS, MO 63102
PHONE: 314-421-3255
CERTIFICATE OF AUTHORITY NUMBER: E-2004000163

STATE OF MISSOURI
RICHARD S. BAUM
NUMBER E-24320
PROFESSIONAL ENGINEER

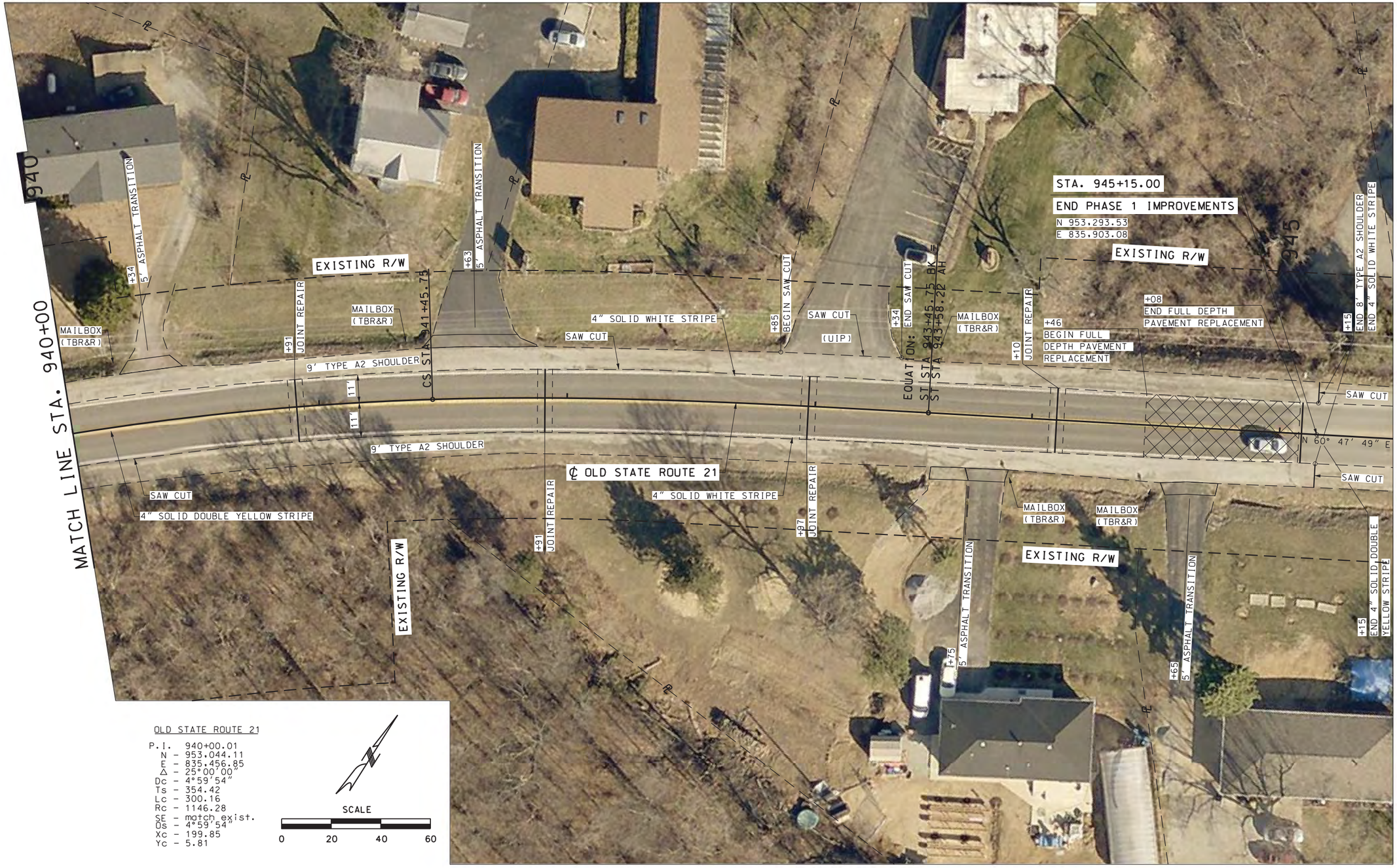

OLD STATE ROUTE 21

P.I. 940+00.01
N - 953.044.11
E - 835.456.85
Δ - 25°00'00"
Dc - 4°59'54"
Ts - 354.42
Lc - 300.16
Rc - 1146.28
SE - match exist.
Ds - 4°59'54"
Xc - 199.85
Yc - 5.81

STATE OF MISSOURI
RICHARD S. BAUM
NUMBER E-24320
PROFESSIONAL ENGINEER

DATE PREPARED	03-NOV-2016
ROUTE	21
STATE	MO
DISTRICT	SL
SHEET NO.	39
COUNTY	JEFFERSON
JOB NO.	PW17039RDW
CONTRACT ID.	
PROJECT NO.	
BRIDGE NO.	

DATE	DESCRIPTION

JEFFERSON COUNTY
PUBLIC WORKS DEPARTMENT

P.O. BOX 100
HILLSBORO, MO 63050
(636-797-5340)
www.jeffcomo.org

JACOBS ENGINEERING GROUP INC.
ST. LOUIS, MISSOURI
PHONE: 314-335-4800
CERTIFICATE OF AUTHORITY: E-2005000163

NOTES:

1. ALL TRAFFIC CONTROL SIGNS AND DEVICES SHALL CONFORM TO CURRENT MISSOURI DEPARTMENT OF TRANSPORTATION STANDARD PLANS AND STANDARD SPECIFICATIONS FOR HIGHWAY CONSTRUCTION.
2. THE CONTRACTOR SHALL CONTACT JEFFERSON COUNTY PUBLIC WORKS DEPARTMENT AT LEAST ONE WEEK PRIOR TO CLOSING A LANE OR SHOULDER.
3. SIGN SETS 1 AND 3 ARE ACTIVE AND FACING ONCOMING TRAFFIC.
4. SIGN SETS 2 AND 4 ARE INACTIVE AND NOT FACING EITHER DIRECTION OF TRAFFIC WHEN THE RESURFACING OPERATION IS LOCATED BETWEEN SIGN SETS 1 AND 3.
5. WHEN SIGN SETS 2 AND 4 ARE ACTIVE, SIGN SETS 1 AND 3 BECOME INACTIVE AND ARE ADVANCED TO BECOME SETS 2 AND 4 WITH SIGN LEGENDS TURNED AWAY FROM BOTH DIRECTIONS OF TRAFFIC. WHEN THE RESURFACING OPERATION ADVANCES TO BETWEEN SIGN SETS 2 AND 4, SIGN SETS 2 AND 4 BECOME ACTIVE (I.E. NEW SIGN SETS 1 AND 3) AND SIGN SETS 1 AND 3 ADVANCED IN THE DIRECTION OF THE OPERATION (I.E. NEW SIGN SETS 2 AND 4).

SUGGESTED CONSTRUCTION SEQUENCE FOR OLD STATE ROUTE 21 IMPROVEMENTS:

1. MILL 3-1/2" OF ASPHALT ON OLD STATE ROUTE 21 TRAVELED-WAY AND MILL/GRADE SHOULDERS TO MATCH TRAVELED-WAY ELEVATION AND TO MAINTAIN POSITIVE DRAINAGE (THE COST TO MILL/GRADE SHOULDERS SHALL BE CONSIDERED INCIDENTAL & THE COST TO BE INCLUDED IN OTHER ITEMS).
2. CONSTRUCT FULL DEPTH PAVEMENT REPAIRS AT ALL LOCATIONS NOTED ON THE PLANS IN ACCORDANCE TO SECTION 613.10.2.3.2 OF MISSOURI DEPARTMENT OF TRANSPORTATION'S STANDARD SPECIFICATIONS FOR HIGHWAY CONSTRUCTION.
3. RESURFACE OLD STATE ROUTE 21 (1-3/4" LIFT OF BP-1).
4. CONSTRUCT OLD STATE ROUTE 21 A2 SHOULDERS (AGGREGATE BASE & 4" PMBB).
5. RESURFACE OLD STATE ROUTE 21 (FINAL LIFT OF 1-3/4" BP-1).
6. CONSTRUCT OLD STATE ROUTE 21 A2 SHOULDERS (1-3/4" BP-1).

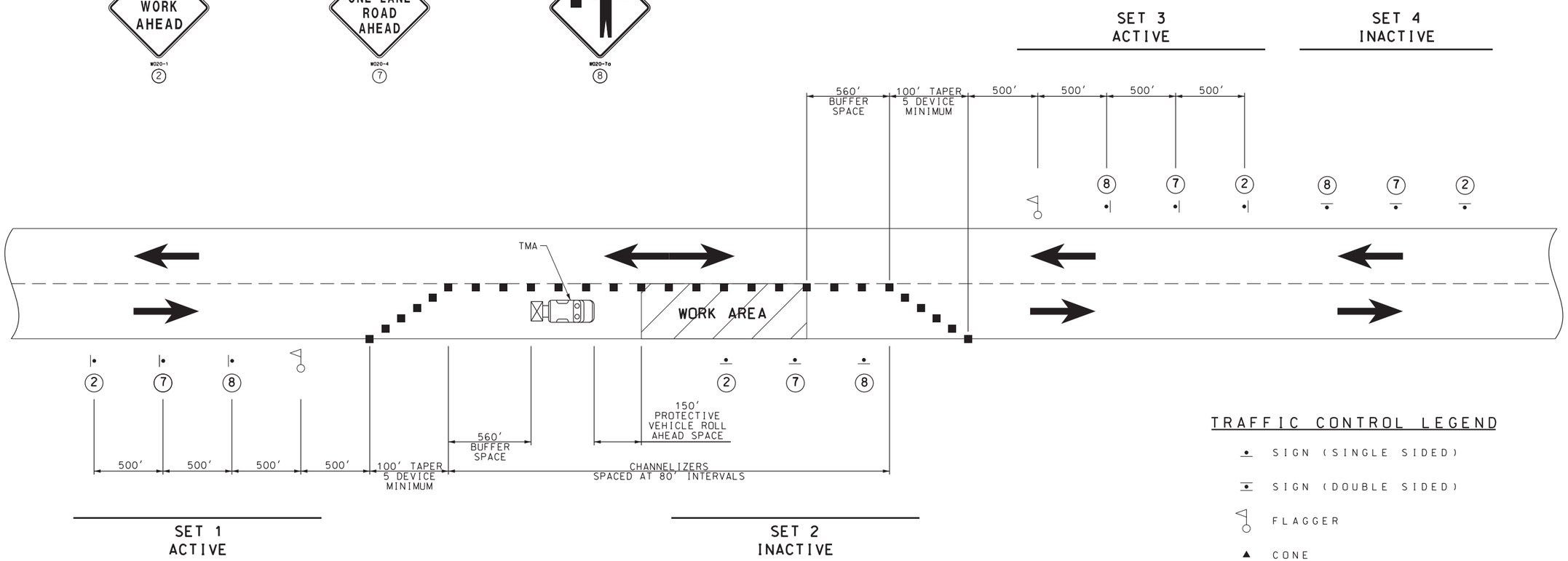

TRAFFIC CONTROL LEGEND

- SIGN (SINGLE SIDED)
- SIGN (DOUBLE SIDED)
- FLAGGER
- CONE
- CHANNELIZER
- BARRICADE
- CHANGEABLE MESSAGE BOARD
- TRUCK MOUNTED ATTENUATOR (TMA)

FLAGGER CONTROL FOR MOVING OPERATION
ONE-LANE TWO-WAY OPERATION
N.T.S.

TRAFFIC CONTROL SHEETS
SHEET 1 OF 4

STATE OF MISSOURI
RICHARD S. BAUM
NUMBER E-24320
REGISTERED PROFESSIONAL ENGINEER

DATE PREPARED	
03-NOV-2016	
ROUTE 21	STATE MO
DISTRICT SL	SHEET NO. 40
COUNTY JEFFERSON	
JOB NO. PW17039RDW	
CONTRACT ID.	
PROJECT NO.	
BRIDGE NO.	

DATE	DESCRIPTION

JEFFERSON COUNTY
PUBLIC WORKS DEPARTMENT
P.O. BOX 100
HILLSBORO, MO 63050
(636-797-5340)
www.jeffcomo.org

[redacted]

NOTES:

1. ALL TRAFFIC CONTROL SIGNS AND DEVICES SHALL CONFORM TO CURRENT MISSOURI DEPARTMENT OF TRANSPORTATION'S STANDARD PLANS AND STANDARD SPECIFICATIONS FOR HIGHWAY CONSTRUCTION.
2. THE CONTRACTOR SHALL CONTACT JEFFERSON COUNTY PUBLIC WORKS DEPARTMENT AT LEAST ONE WEEK PRIOR TO CLOSING A LANE OR SHOULDER.
3. THE CONTRACTOR SHALL MAKE PROVISIONS TO PROVIDE NORMAL INGRESS & EGRESS TO PRIVATE ENTRANCES AT NO ADDITIONAL COST TO THE CONTRACT.
4. SIGN 44A NOT REQUIRED FOR NARROW LANE SECTIONS LESS THAN ONE MILE.

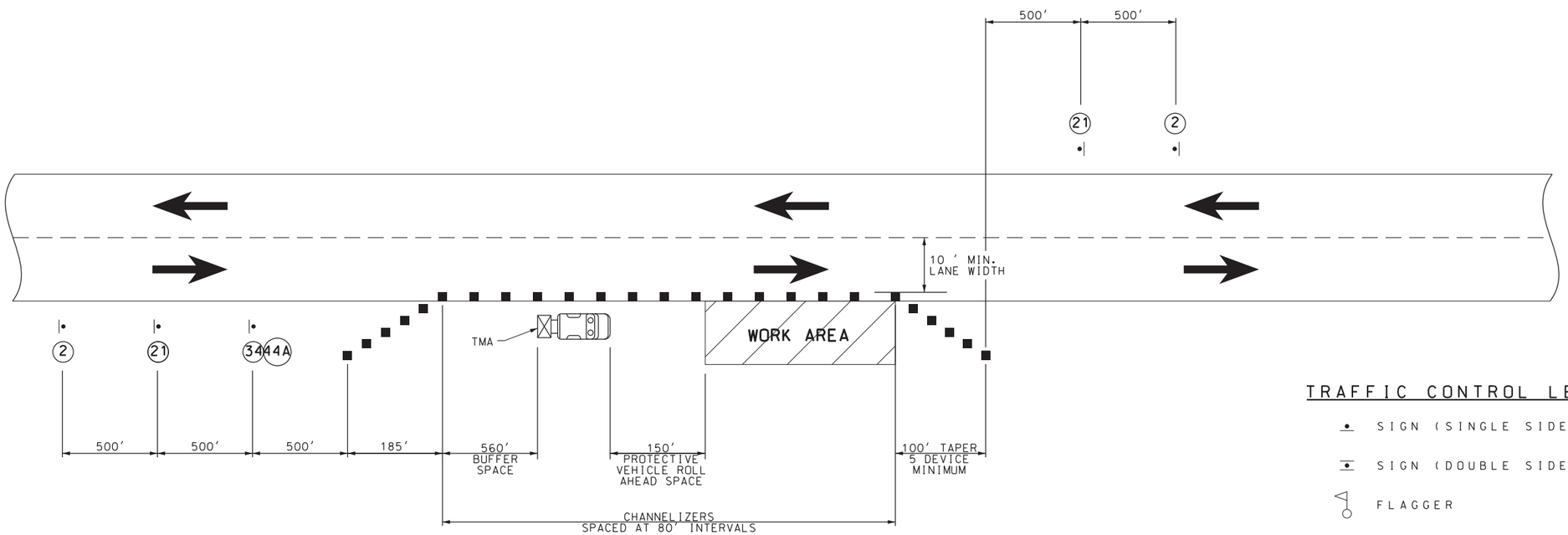

SHOULDER WORK
MINOR TRAVELWAY ENCROACHMENT

N.T.S.

TRAFFIC CONTROL LEGEND

- SIGN (SINGLE SIDED)
- SIGN (DOUBLE SIDED)
- FLAGGER
- CONE
- CHANNELIZER
- BARRICADE
- CHANGEABLE MESSAGE BOARD
- TRUCK MOUNTED ATTENTUATOR (TMA)

TRAFFIC CONTROL SHEETS
SHEET 2 OF 4

STATE OF MISSOURI
RICHARD S. BAUM
NUMBER E-24320
PROFESSIONAL ENGINEER

DATE PREPARED	03-NOV-2016
ROUTE	21
STATE	MO
DISTRICT	SL
SHEET NO.	41
COUNTY	JEFFERSON
JOB NO.	PW17039RDW
CONTRACT ID.	
PROJECT NO.	
BRIDGE NO.	

DATE	DESCRIPTION

JEFFERSON COUNTY
PUBLIC WORKS DEPARTMENT
P.O. BOX 100
HILLSBORO, MO 63050
(636-797-5340)
www.jeffcomo.org

[redacted]

NOTES:

1. ALL TRAFFIC CONTROL SIGNS AND DEVICES SHALL CONFORM TO CURRENT MISSOURI DEPARTMENT OF TRANSPORTATION'S STANDARD PLANS AND STANDARD SPECIFICATIONS FOR HIGHWAY CONSTRUCTION.
2. THE CONTRACTOR SHALL UTILIZE WATERBORNE PAINT, TYPE P BEADS FOR TEMPORARY MARKINGS ON MILLED SURFACES AND TYPE 2 TEMPORARY RAISED PAVEMENT MARKERS AFTER THE FIRST LIFT OF BP-1.
3. SIGN 23 (W08-17) TO REMAIN VISIBLE UNTIL SHOULDER SHAPING IS COMPLETE.
4. WHEN SIGN 23 (W08-17) SHOULDER DROP-OFF SIGNS ARE IN PLACE FOR GREATER THAN THREE (3) DAYS, THE SHOULDER DROP-OFF PLAQUE (W08-17P) SHOULD BE USED IN ADDITION WITH THE SHOULDER DROP-OFF SIGN (W08-17).

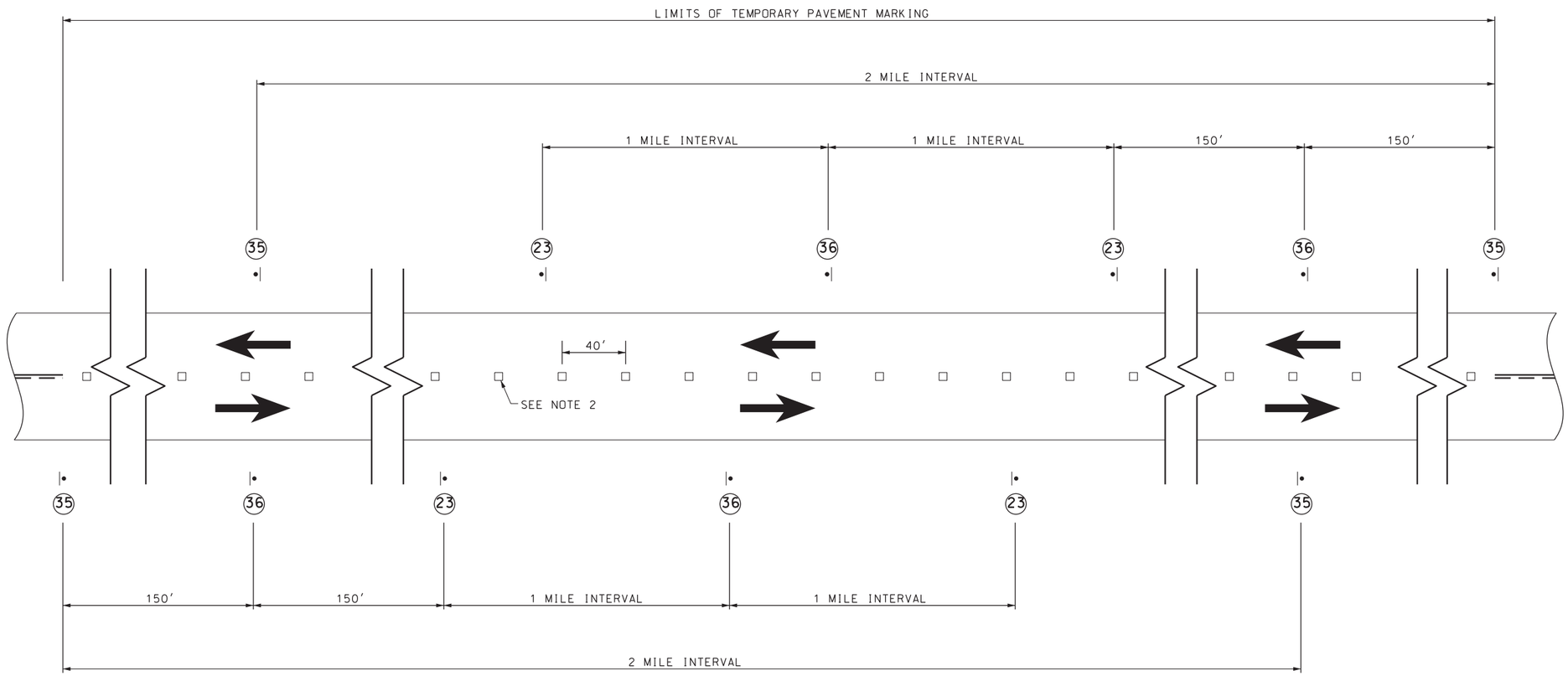

SIGN SPACING FOR MAINLINE
N.T.S.

TRAFFIC CONTROL LEGEND

- SIGN (SINGLE SIDED)
- SIGN (DOUBLE SIDED)
- FLAGGER
- CONE
- CHANNELIZER
- BARRICADE
- CHANGEABLE MESSAGE BOARD
- TRUCK MOUNTED ATTENTUATOR (TMA)

TRAFFIC CONTROL SHEETS
SHEET 3 OF 4

STATE OF MISSOURI
RICHARD S. BAUM
NUMBER E-24320
PROFESSIONAL ENGINEER

DATE PREPARED	
03-NOV-2016	
ROUTE 21	STATE MO
DISTRICT SL	SHEET NO. 42
COUNTY JEFFERSON	
JOB NO. PW17039RDW	
CONTRACT ID.	
PROJECT NO.	
BRIDGE NO.	

DATE	DESCRIPTION

JEFFERSON COUNTY
PUBLIC WORKS DEPARTMENT
P.O. BOX 100
HILLSBORO, MO 63050
(636-797-5340)
www.jeffcomo.org

[redacted]

NOTES:

1. ALL TRAFFIC CONTROL SIGNS AND DEVICES SHALL CONFORM TO CURRENT MISSOURI DEPARTMENT OF TRANSPORTATION'S STANDARD PLANS AND STANDARD SPECIFICATIONS FOR HIGHWAY CONSTRUCTION.
2. THE CONTRACTOR SHALL CONTACT JEFFERSON COUNTY PUBLIC WORKS DEPARTMENT AT LEAST ONE WEEK PRIOR TO IMPLEMENTING THE DETOUR PLAN FOR FULL DEPTH PAVEMENT REPLACEMENT AND JOINT REPAIR NORTH OF ENCHANTED FOREST DR.
3. THE CONTRACTOR SHALL MAKE PROVISIONS TO PROVIDE NORMAL INGRESS & EGRESS TO PRIVATE ENTRANCES, MINOR SUBDIVISION ROADS AND COMMERCIAL ENTRANCES AT NO ADDITIONAL COST TO THE CONTRACT.
4. PLACE CHANGEABLE MESSAGE BOARDS ONE WEEK IN ADVANCE OF CLOSURE TO WARN MOTORISTS OF UPCOMING DETOUR (COORDINATE WITH JEFFERSON COUNTY PUBLIC WORKS DEPARTMENT).

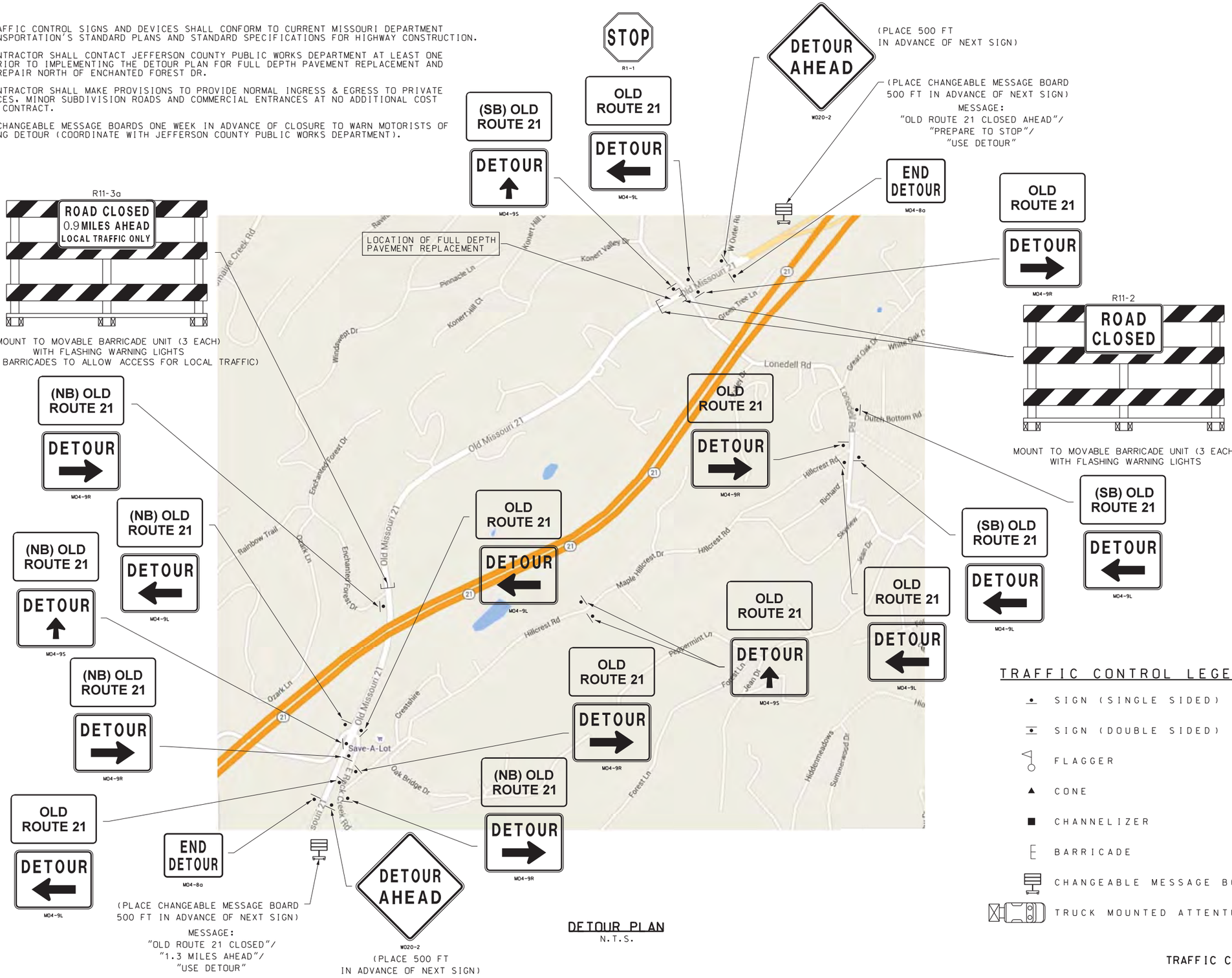

DETOUR PLAN
N.T.S.

TRAFFIC CONTROL LEGEND

- SIGN (SINGLE SIDED)
- SIGN (DOUBLE SIDED)
- FLAGGER
- CONE
- CHANNELIZER
- BARRICADE
- CHANGEABLE MESSAGE BOARD
- TRUCK MOUNTED ATTENTUATOR (TMA)

TRAFFIC CONTROL SHEETS
SHEET 4 OF 4

STATE OF MISSOURI
RICHARD S. BAUM
NUMBER E-24320
REGISTERED PROFESSIONAL ENGINEER

DATE PREPARED	03-NOV-2016
ROUTE	21
STATE	MO
DISTRICT	SL
SHEET NO.	43
COUNTY	JEFFERSON
JOB NO.	PW17039RDW
CONTRACT ID.	
PROJECT NO.	
BRIDGE NO.	

DESCRIPTION

DATE

JEFFERSON COUNTY
PUBLIC WORKS DEPARTMENT

P.O. BOX 100
HILLSBORO, MO 63050
(636-797-5340)
www.jeffcomo.org

JACOBS ENGINEERING GROUP INC.
ST. LOUIS, MO
PHONE
CERTIFICATE