PROJECT SPECIFICATIONS FOR:

SCHOOL ZONE SAFETY IMPROVEMENT PROJECT

PW17000TRS

County of Jefferson

Ken Waller
County Executive

DEPARTMENT OF PUBLIC WORKS
Jason Jonas, P.E. - Director
P.O. BOX 100
HILLSBORO, MO 63050

Telephone: 636-797-5340
Fax: 636-797-5565
Web Address: www.jeffcomo.org

STATE OF MISSOURI
CHRISTOPHER WILLIAM EHLEN
NUMBER
PE-2008002154
3-15-17
PROFESSIONAL ENGINEER

APPROVED FOR CONSTRUCTION

BY: _____ **DATE:** 3/15/2017

(County Engineer)

TABLE OF CONTENTS

Description	*Page*
Spec Book Cover	1
Table of Contents	2
Project Location Map	3
Bid Notice	3
Bid Submittal Package (Cover Sheet)	4
Plan Holder Contact Form	5
Bidder's Checklist	6
Instructions and Notices to Contractors	7
Bid Form	12
Bid Bond	15
Bidder's Acknowledgement	16
Annual Worker Eligibility Affidavit	17
Awarded Contractor Section	
Agreement Form	18
Contract Performance Bond	24
Materials and Payment Bond	26
General Provisions	27
Revisions to MoDOT Standard Specifications	38
Job Special Provisions	50
Traffic Control Plan	55
Affidavit of Compliance with Prevailing Wage Law	77
Missouri Annual Wage Order	78

BID NOTICE

Sealed bids for SCHOOL ZONE SAFETY IMPROVEMENT PROJECT PW17000TRS will be received at the office of The Department of the County Clerk, Jefferson County Administration Center, 729 Maple Street, Hillsboro, Missouri until 2:00 o'clock P.M. (DST) on, April 11th, 2017 , and at that time will be publicly opened and read. All bids shall be submitted in triplicate in an opaque sealed envelope, marked with the Project title, name and address of the Bidder, and accompanied by the other required documents. Bids submitted via fax or electronic will be rejected. Late Bids will not be accepted and will be returned to the sender, unopened.

The proposed work includes the installation of AC and Solar powered flashing beacon systems, power supply assemblies, conduit, cable, existing sign removal, new roadway signage, utility connections, etc. All work will occur on occupied pubic roadways and within recorded easements. Therefore, MUTCD compliant traffic control shall be provided.

Work shall be in accordance with the provided Specifications, Job Special Provisions, and Plans. Where not specifically covered by the Specifications, or Job Special Provisions or Plans, the Contractor shall adhere to the currently effective **2016** Edition of the "Missouri Standard Specifications for Highway Construction", and the currently effective "MoDOT Standard Plans for Highway Construction." The contractor shall have a maximum of **SIXTY (60)** working days to complete the project.

Plans and specifications for this project will be available, as no cost, downloadable files from the Jefferson County website (http://www.jeffcomo.org/PublicWorksProjects.aspx?nodeID=Purchasing), beginning Friday, March 17, 2017 The bidder will be responsible to check the County's website for addendum(s) regarding this project prior to bid opening. All potential bidders must complete the "Plan Holder Contact Information" form and submit this form to Public Works at pwprojects@jeffcomo.org and request placement on the bidder's list.

All labor used in the construction of this public improvement shall be paid a wage no less than the prevailing hourly rate of wages of work, of a similar character in this locality, as established by the State of Missouri's "Annual Wage Order" that is currently effective 10 calendar days prior to bid opening.

The County of Jefferson, Missouri hereby notifies all bidders that it will affirmatively ensure that in any contract entered into pursuant to this advertisement, businesses owned and controlled by socially and economically disadvantaged individuals will be afforded full opportunity to submit bids in response to this invitation and will not be discriminated against on the grounds of race, color, religion, creed, sex, age, ancestry, or national origin in consideration for an award.

All bidders must be on MoDOT's Qualified Contractor List per Section 102.2 of the Missouri Standard Specifications for Highway Construction, **2016** Edition. **The contractor questionnaire must be on file 7 days prior to bid opening.**

Contractors and sub-contractors who sign a contract to work on any public works project must provide a minimum 10-Hour OSHA construction safety program, or similar program approved by the Department of Labor and Industrial Relations, to be completed by their on-site employees within sixty (60) days of beginning work on the construction project.

A certified or cashier's check or a bid bond in the amount of 5% shall be submitted with each proposal. **A certificate of insurance shall be submitted with each proposal.**

All bids shall be made on the forms provided. Three (3) copies of the bid must be submitted, one (1) being original inked. The County of Jefferson, Missouri reserves the right to reject any or all bids, to waive any informality in the bids received, and to award the contract to the lowest, responsive, responsible bidder.

END BID NOTICE

County of Jefferson

Ken Waller
County Executive

DEPARTMENT OF PUBLIC WORKS
Jason Jonas, P.E. - Director

Telephone: 636-797-5340 · Fax:
636-797-5565 Web Address:
www.jeffcomo.org

BID SUBMITTAL

SCHOOL ZONE SAFETY IMPROVEMENT PROJECT

PROJECT NUMBER: PW17000TRS

FUNDING SOURCE: ROAD/BRIDGE

ROUTE: N/A

PROJECT MANAGER: JAMES "J.R." HAMILTON

636.797.6126
jhamilton@jeffcomo.org

STRUCTURE NO.: N/A

BID SUBMITTAL DEADLINE: April 11th, 2017, 2:00 PM (DST)

BIDDER'S NAME:_____

IN ORDER TO BE CONSIDERED A RESPONSIVE, RESPONSIBLE BIDDER, THE CONTRACTOR MUST READ, UNDERSTAND, COMPLETE AND SUBMIT 3 COPIES (1 ORIGINAL) OF ALL FORMS WITHIN THIS BID SUBMITTAL PACKAGE (THIS COVER AND ALL SHEETS WITH THE BID SUBMITTAL BORDER), ALONG WITH OTHER SUBMITTAL REQUIREMENTS AS STATED ON THE BIDDER CHECKLIST.

The County does not assume any responsibility for errors or misinterpretations resulting from the use of incomplete sets of Bidding Documents.

PLAN HOLDER CONTACT INFORMATION

All potential bidders <u>must</u> complete this form and submit it to the Jefferson County email address listed below in order to provide contact information as required. All other plan holders may submit this form at their own option. Addendums will be posted on the county website. In the event of disruption of website services, all such information will be communicated to all registered plan holders.

Project: Plans & Specifications:	PW17000TRS SCHOOL ZONE SAFETY IMPROVEMENT PROJECT
Cost:	**$0.00 AVAILABLE ONLINE**
Bid Opening Date:	April 11th, 2017, 2:00 PM (DST)
Estimate:	$200,700.00

Company Name*:	
Address*:	
City, State, Zip*:	
Phone*:	
Email*:	

*required information

Email this completed form to:	pwprojects@jeffcomo.org

BIDDER CHECKLIST

☐ Completion of item a), and submittal of 3 collated copies of items b) thru l), encompasses a complete bid submittal

a) Complete and Submit "Plan Holder's Contact Information" Form prior to bid submittal (email before bid opening)
b) Bid Submittal Cover Sheet with bidder's name printed or typed
c) Instructions and Notices to Contractors initialed on each page, all spaces filled, signed.
d) Balanced, complete, signed, and embossed (if corporation) Bid Form, **addenda acknowledged and 1st sheet attached**
e) Bid Guaranty/Bid Bond (Assurance Company's form is valid substitute to generic form herein)
f) Bidder's Acknowledgement completed and signed
g) Affidavit of Federal Employment Authorization (Annual Worker Eligibility Verification Affidavit)
h) Certification Regarding Anti-collusion (see notice 12)
i) Bid to be submitted in ink with proper signatures with no white out
j) 3 copies of complete bid, only one need be original ink.
k) Bid submitted in opaque envelope with appropriate information on outside of envelope
l) Enclose Certificate of Insurance

☐ Submit completed Contractor Questionnaire and/or Contractor Prequalification Questionnaire with attachments not later than seven (7) days prior to the date and hour of the bid opening. See Secs 101-103 of the Standard Specifications, and Rule 7 CSR 10-15.900, "Prequalification to Bid of Certain Contractors". Questionnaire and Contact information are provided on MoDOTâ€™s website (required on highway and bridge projects)

☐ If submitting the bid by mail, it is to be completed, executed, and submitted in a sealed envelope addressed to County of Jefferson, Missouri. Provide the vendor name, vendor address, vendor number, county, route and federal project number on the outside of the envelope (if applicable).

☐ Please read all items in the bidding document carefully. For paper bids, complete all items in **ink** or by **typing** in the information.

☐ Sign this bidding document properly. If submitted in the name of a firm or corporation, the legal name of the firm or corporation should appear in the space designated, and be signed for by one or more persons legally qualified to execute papers in the name of said firm or corporation. Affix Corporate Seal if the Bidder is a Corporation.

☐ Bid Bond shall be executed by bidder and surety, or attach cashier's check to the bid bond form.

☐ Common Mistakes:

a) Not signing the bid
b) Not acknowledging all addenda
c) Not providing a bid bond
d) Using pencil to fill out the bid
e) Using white out to make corrections to the itemized bid sheets
f) Not initialing changes made
g) Not Providing Proof of Insurance

All questions concerning the bid document preparation can be directed to the Jefferson County Public Works Department Project Manager:

JAMES "J.R." HAMILTON 636.797.6126
jhamilton@jeffcomo.org

Special Needs: If you have special needs addressed by the Americans with Disabilities Act, please notify Jefferson County Public Works Department, at 636-797-6126 or through Missouri Relay System, TDD 1-800-735-2966, at least five (5) working days prior to the bid opening.

INSTRUCTIONS AND NOTICES TO CONTRACTORS

BIDDER SHALL INITIAL EACH SHEET ACKNOWLEDGING UNDERSTANDING AND ACCEPTANCE

Sealed bids for the proposed work will be addressed and delivered to the office of The County Clerk, 729 Maple Street, Jefferson County Administration Center, Hillsboro, Missouri until 2:00 o'clock P.M. (DST) on April 11th, 2017 , and at that time will be publicly opened. All bids shall be submitted in triplicate in an opaque sealed envelope, marked with the Project title, name and address of the Bidder, and accompanied by the other required documents. Bids submitted via fax or electronic will be rejected. Late Bids will not be accepted and will be returned to the sender, unopened. The prime contractor must be on MoDOT's approved contractor listing at least 7 days before the day of the bid opening in order for Jefferson County to concur with the award of this project. Jefferson County will only concur with awarding the contract to a responsible bidder who has submitted the lowest, responsive bid. A responsive bid is one that meets all requirements of the advertisement and proposal, and "responsible" is defined as one who is physically organized and equipped with the financial wherewithal to undertake and complete the contract.

(1) PROPOSED WORK:
The proposed work includes the installation of AC and Solar powered flashing beacon systems, power supply assemblies, conduit, cable, existing sign removal, new roadway signage, utility connections, etc. All work will occur on occupied pubic roadways and within recorded easements. Therefore, MUTCD compliant traffic control shall be provided.

(2) PLANS AND SPECIFICATIONS: Plans (if applicable) and specifications for this project are available through the Jefferson County, Missouri Government website (Jeffcomo.org) under the "Invitation for Bids/Request for Proposals" tab in the "Quick Links" box in the upper right corner of the homepage. It is the bidder's responsibility to obtain these documents from the provided source, including copies for use in construction. Paper copies of any documents will require advance notice and are subject to administrative fees for labor and material costs. Plans, specifications, and any other project documents are made available only for the purposes of obtaining bids, and as a resource to the awarded contractor. These documents do not confer a license or grant for any other use.

(3) CONTRACT DOCUMENTS AND SITE CONDITIONS: Before submitting a Bid, each Bidder must (a) examine the Contract Documents thoroughly, (b) visit the site to familiarize himself with local conditions that may in any manner affect cost, progress or performance of the Work, (c) familiarize himself with federal, state and local laws, ordinances, rules and regulations that may in any manner affect cost, progress or performance of the Work; and (d) study and carefully correlate Bidder's observations with the Contract Documents. Each bidder will, at his own expense, make such investigations and tests as the bidder may deem necessary to determine his Bid for performance of the Work in accordance with the time, price and other terms and conditions of the Contract Documents. On request, the County will provide each bidder access to the site to conduct such investigations and tests, as each bidder deems necessary for submission of his Bid. The lands upon which the Work is to be performed rights - of - way for access thereto and other lands designated for use by the Contractor in performing the work are identified in the projects specifications or plans.

(4) COMPLIANCE WITH CONTRACT PROVISIONS: The bidder, having examined and being familiar with the local conditions affecting the work, and with the contract, contract documents, including the Missouri Highways and Transportation Commission's "Missouri Standard Specifications for Highway Construction, **2016**," and "Missouri Standard Plans for Highway Construction, 2016" and Supplemental Revisions (if applicable), their revisions, and the request for bid, including appendices, special provisions and plans, hereby proposes to furnish all labor, materials, equipment, services, etc., required for the performance and completion of the work. All specifications published by Missouri Department of Transportation may be obtained from the webpage www.modot.org. By submitting this bid, the contractor acknowledges that all specifications, including those that are referenced in the bid documents, shall be specifications of the contract. It shall be conclusively presumed that they are in the bidder's possession, and they have been reviewed and used by the bidder in the preparation of any bid submitted on this project. All questions about the meaning or intent of the Contract Documents shall be submitted to the county project manager as stated on the "Bidder Checklist." Replies will be issued by Addenda, mailed, or electronically delivered to all parties recorded by the County Engineer as having received the Bidding Documents. Oral and other interpretations or clarifications will be without legal effect. The bidder must have completed and submitted the Plan Holder's Contact form to be recorded as having received the Bidding Documents. In all documents published by others, the term "Commission" shall be replaced with the term, "County of Jefferson", and the term "Engineer" shall be replaced with "Director of Public Works/County Engineer." The contracting authority for this contract is Jefferson County Public Works.

(5) PRIME CONTRACTOR REQUIREMENTS: The prime contractor must be on MoDOT's approved contractor listing at least 7 days before the day of the bid opening in order for MoDOT to concur with the award of this project. The limitation in Sec 108.1.1 of the Missouri Standard Specifications for Highway Construction that "the contractor's organization shall perform work amounting to not less than 40 percent of the total contract cost" is waived for this contract. Instead, the less restrictive terms of the Federal Highway Administration's rule at Title 23 Code of Federal Regulations (CFR) § 635.116(a) shall apply, so that the contractor must perform project work with its own organization equal to and not less than **30 percent** of the total original contract price. Second-tier subcontracting will not be permitted on this contract. All other provisions in Sec 108.1.1 et seq. of the Missouri Standard Specifications for Highway Construction shall remain in full force and effect, and shall continue to govern the contractor and its subcontractors, in accordance with the provisions of Title 23 CFR § 635.116.

BIDDER'S INITIALS INDICATING UNDERSTANDING AND ACCEPTANCE_____

(6) SUBCONTRACTORS: No subcontract may be awarded by the prime contractor under this contract to anyone without approval of the County. In order for such approval to be obtained the Contractor shall submit a request to subcontract. This is not required for bid submittal. The proposed subcontractor must also submit, through the Contractor, the following documents in an acceptable form:

a. Copy of any subcontracts, if requested
b. Certification by proposed subcontractor regarding equal employment opportunity;
c. Certification by proposed subcontractor concerning labor standards and prevailing wage requirements;
d. Any such other documents and evidence as the County may reasonably request to show that the subcontractor has fully complied with any reporting requirements to which it is or was subject.
e. Affidavit of Federal Employment Authorization to be completed and turned in by proposed subcontractors.
f. Subcontractor shall have certificate of insurance with the same limits as the prime contractor listing Jefferson County Public Works as Additional Insured and as a certified holder. The endorsement is also required.
g. E-verify MOU in its entirety.

(7) SUBCONTRACTOR DISCLOSURE: Requirements contained within Sec 102.7.12 of the Missouri Standard Specification for Highway Construction shall be waived for this contract. The documents by proposed subcontractors are not required to be attached to the Contractor's Bid.

(8) SALES AND USE TAX EXEMPTION: County of Jefferson, a tax exempt entity, will furnish a Missouri Project Exemption Certificate as described in Section 144.062 RSMo to the awarded contractor who in turn may use the certificate to purchase materials for a specific project performed for the tax exempt entity. Only the materials and supplies incorporated or consumed during the construction of the project are exempt. The certificate will be issued to the contractor for a specific project for a defined period of time.

(9) PERIOD OF PERFORMANCE: If the bid is accepted, the bidder agrees that work shall be diligently prosecuted at such rate and in such manner as, in the judgment of the engineer, is necessary for the completion of the work within the time specified as follows in accordance with Sec 108:

60 WORKING DAYS

(10) LIQUIDATED DAMAGES: The bidder agrees that, should the bidder fail to complete the work in the time specified or such additional time as may be allowed by the engineer under the contract, the amount of liquidated damages to be recovered in accordance with Sec 108 shall be as follows:

$ 700 .00 SEVEN HUNDRED U.S. DOLLARS/DAY

(11) BID GUARANTY: The bidder shall submit a Bid Guaranty. The project bid bond form is included in the bid book. The bidder shall mark the box below to identify the type of Bid Guaranty.

☐ Paper Bid Bond
☐ Cashier's Check

Bid Guaranty shall be made payable to the Owner, in the amount of five percent of the Bidder's maximum Bid price and in the form of a certified or bank check or a Bid Bond (on form attached, if a form is prescribed) issued by a Surety. The Bid security of the Successful Bidder will be retained until such Bidder has executed the Agreement and furnished the required Contract Security within 15 days of the Notice of Award. Failure to do so may result in the annulment of the Notice of Award and forfeiture of the Bid Security. The Bid Security of any Bidder whom the Owner believes to have a reasonable chance of receiving the award may be retained by the Owner until the earlier of the seventh day after the "effective date of the Agreement" (which is the date the agreement has been executed by all parties) by Owner to Contractor and the required Contract Security is furnished or the sixty-first day after the Bid opening. Bid Security of other Bidders will be returned within seven days of the Bid opening.

(12) SUBSTITUTE MATERIALS, EQUIPMENT, AND VALUE ENGINEERING: The Contract, if awarded, will be on the basis of material and equipment specified in the Drawings or Supplemental Specifications without consideration of possible substitute "or-equal" items. Whenever it is indicated in the Drawings or Supplemental Specifications that a substitute or "or-equal" item of material or equipment may be furnished or used by a Contractor, it must first be proven to be acceptable by the county. Proposals to alter the project design or specifications, otherwise known as "Value Engineering" must also be proposed and accepted. Application for such acceptance will not be considered by County Engineer until after the "effective date of the Agreement". Bidders should assume that no modifications to the contract or design will be allowed for it is not guaranteed that a modification will be allowed. Bid on the plans and Specifications "As-Is", including any issued addendum during the bidding phase.

(13) MATERIALS INSPECTION: All technicians who perform or witness such sampling and testing shall be deemed as qualified by successfully completing the requirements of EPG 106.18 Technician Certification Program, for that specific technical area.

BIDDER'S INITIALS INDICATING UNDERSTANDING AND ACCEPTANCE_____

(14) MISSOURI DOMESTIC PRODUCT PROCUREMENTACT: Bidder represents that the goods provided comply with Sections 34.350 to 34.359, RSMo, known as the Domestic Product Procurement Act. The Act encourages the purchase of products manufactured or produced in the United States, State of Missouri, and Jefferson County, Missouri. Bidder shall include proof of compliance with the Act with the bid, when requested.

(15) PREVAILING WAGE: This contract requires payment of the prevailing hourly rate of wages for each craft or type of work required to execute the contract as determined by the Missouri Department of Labor and Industrial Relations. For work performed anywhere within this contract, the contractor, and their subcontractors, shall pay their employees the applicable state wages as detailed in the Missouri "Annual Wage Order" that is included within these specifications. The contractor will forfeit a penalty to the contracting public body of $100 per day (or portion of a day) for each worker that is paid less than the prevailing rate for any work done under the contract by the contractor or by any subcontractor. These supplemental bidding documents have important legal consequences. It shall be conclusively presumed that they are in the bidder's possession, and they have been reviewed and used by the bidder in the preparation of any bid submitted on this project.

(16) WORKER ELIGIBILITY REQUIREMENTS: Execution of the construction contract for this project is dependent upon the awarded bidder providing an Affidavit of Compliance AND E-Verify Memorandum-of-Understanding (MOU) between the bidder and Department of Homeland Security to the Contracting Authority as required by section 285.530 RSMo**. The cover page and signature page of the E-Verify MOU and the Affidavit must be submitted with the bid.** A sample Affidavit of Compliance can be found at the Missouri Attorney General's website at the following link:

https://labor.mo.gov/sites/labor/files/pubs_forms/PW-4-AI.pdf

All bidders must also be enrolled in the E-Verify Program, and include their MOU prior to contract execution. Bidders who are not enrolled will need to go to the following website link and select "Enroll in the Program" to get started. After completing the program, they will receive their E-Verify MOU with Department of Homeland Security. This document will need to be printed out and kept on file so that a copy can be attached to the Affidavit of Compliance. This requirement also applies to subcontractors and contracted labor. It is the prime contractor's responsibility to verify the worker eligibility of their subcontractors in order to protect their own company from liability as required by section 285.530 RSMo.

http://www.dhs.gov/files/programs/gc_1185221678150.shtm

(17) ANTIDISCRIMINATION: The Contracting Authority hereby notifies all bidders that it will affirmatively insure that in any contract entered into pursuant to this advertisement, businesses owned and controlled by socially and economically disadvantaged individuals will be afforded full opportunity to submit bids in response to this invitation and will not be discriminated against on the grounds of race, color, religion, creed, sex, age, ancestry, or national origin in consideration for an award.

(18) OSHA TEN HOUR TRAINING REQUIREMENTS: Missouri Law, 292.675 RSMO, requires any awarded contractor and its subcontractor(s) to provide a ten-hour Occupational Safety and Health Administration (OSHA) Construction Safety Program (or a similar program approved by the Missouri Department of Labor and Industrial Relations as a qualified substitute) for their on-site employees (laborers, workmen, drivers, equipment operators, and craftsmen) who have not previously completed such a program and are directly engaged in actual construction of the improvement (or working at a nearby or adjacent facility used for construction of the improvement). The awarded contractor and its subcontractor(s) shall require all such employees to complete this ten-hour program, pursuant to 292.675 RSMO, unless they hold documentation on their prior completion of said program. Penalties, for Non-Compliance include contractor forfeiture to the Contracting Authority in the amount of $2,500, plus $100 per contractor and subcontractor employee for each calendar day such employee is employed beyond the elapsed time period for required program completion under 292.675 RSMO. See General Provision 43 for further details.

(19) TRAINEES: On-The-Job-Training is not a requirement of this contract

(20) ADDENDUM ACKNOWLEDGEMENT: An addendum, if issued, will be posted on the County's website (Jeffcomo.org in same location as these specifications), and will be emailed to the provided contact on the "Plan Holder Information Request" form. Bidder must submit the plan holder contact form, with a valid email contact, to receive any addenda notifications. By submitting a bid, the bidder acknowledges he or she was afforded equal opportunity to gain access and knowledge of any addenda. The County shall not be held liable for a bidder's failure to provide proper contact information leading to the failure of acknowledging any contract modifications. The undersigned states that all addenda (if applicable) have been received, acknowledged and incorporated into their bid, prior to submittal. Acknowledgement of addenda shall be completed in the appropriate section of the "Bid Form", after the bid line items. If no addendum issued, bidder shall note this within the same section of the "Bid Form" Bidder shall also staple the first sheet (cover page that has the engineer's seal) of the addendum to the back side of the first sheet of the bid submittal package.

BIDDER'S INITIALS INDICATING UNDERSTANDING AND ACCEPTANCE_____

(21) SIGNATURE AND IDENTITY OF BIDDER: The undersigned states that the following provided information is correct and that (if not signing with the intention to bind themselves to become the responsible and sole bidder) they are the agent of, and they are signing and executing this, as the bid of

_____, which is the correct LEGAL NAME as stated on the contractor questionnaire (if applicable).

a) The organization submitting this bid is a(n) (1) individual bidder, (2) partnership, (3) joint venture (whether individuals or corporations, and whether doing business under a fictitious name), or (4) corporation. Indicate by marking the appropriate box below.

☐ sole individual ☐ partnership ☐ joint venture

☐ corporation, incorporated under laws of state of _____.

b) If the bidder is doing business under a fictitious name, indicate below by filling in the fictitious name

_____

Executed by bidder this _____day of _____20 ___.

THE BIDDER CERTIFIES THAT THE BIDDER AND ITS OFFICIALS, AGENTS, AND EMPLOYEES HAVE NEITHER DIRECTLY NOR INDIRECTLY ENTERED INTO ANY AGREEMENT, PARTICIPATED IN ANY COLLUSION, OR OTHERWISE TAKEN ANY ACTION IN RESTRAINT OF FREE COMPETITIVE BIDDING IN CONNECTION WITH THIS BID, AND THAT THE BIDDER INTENDS TO PERFORM THE WORK WITH ITS OWN BONAFIDE EMPLOYEES AND SUBCONTRACTORS, AND DID NOT BID FOR THE BENEFIT OF ANOTHER CONTRACTOR.

THE BIDDER ACKNOWLEDGES THAT THIS IS AN UNSWORN DECLARATION, EXECUTED UNDER PENALTY OF PERJURY UNDER THE LAWS OF THE UNITED STATES AND/OR FALSE DECLARATION UNDER THE LAWS OF MISSOURI, AND ANY OTHER APPLICABLE STATE OR FEDERAL LAWS. THE FAILURE TO PROVIDE THIS CERTIFICATION IN THIS BID MAY MAKE THIS BID NON-RESPONSIVE, AND CAUSE IT TO BE REJECTED.

THE BIDDER CERTIFIES THAT THE BIDDER'S COMPANY KNOWINGLY EMPLOYS ONLY INDIVIDUALS WHO ARE AUTHORIZED TO WORK IN THE UNITED STATES IN ACCORDANCE WITH APPLICABLE FEDERAL AND STATE LAWS AND ALL PROVISIONS OF MISSOURI EXECUTIVE ORDER NO. 07-13 FOR CONTRACTS WITH THE CONTRACTING AUTHORITY.

☐ Check this box ONLY if the bidder REFUSES to make any or all of these certifications. The bidder may provide an explanation for the refusal(s) with this submittal.

_____

Signature of Bidder's Owner, Officer, Partner or Authorized Agent

_____

Please print or type name and title of person signing here

Attest:

_____

Secretary of Corporation if Bidder is a Corporation

Affix Corporate Seal (If Bidder is a Corporation)

NOTE: If bidder is doing business under a fictitious name, the bid shall be executed in the legal name of the individual, partners, joint ventures, or corporation, and registration of fictitious name filed with the secretary of state, as required by sections 417.200 to 417.230 RSMo. If the bidder is a corporation not organized under the laws of Missouri, it shall procure a certificate of authority to do business in Missouri, as required by section 351.572 et seq RSMo. A certified copy of such registration of fictitious name or certificate of authority to do business in Missouri shall be filed with the Missouri Highways and Transportation Commission, as required by the standard specifications.

(22) MODIFICATION AND WITHDRAWAL OF BIDS: Bids may be modified or withdrawn by an appropriate document duly executed (in the manner that a Bid must be executed) and delivered to the place where Bids are to be submitted at any time prior to the opening of Bids. If, within twenty-four hours after Bids are opened, any Bidder files a duly signed written notice with the County and promptly thereafter demonstrates, to the reasonable satisfaction of the County, that there was a material and substantial mistake in the preparation of his or her Bid, that Bidder may withdraw their bid. Thereafter, that Bidder will be disqualified from further bidding on the proposed contract, or any future contracts related to the original.

(23) OPENING OF BIDS: Bids will be opened publicly. All Bids shall remain open for sixty days after the day of the Bid opening. The County may, at their sole discretion, release any Bid, and return the Bid Security prior to that date. The County reserves the right to reject any and all bids, to waive any or all informalities, and to reject any non-responsive bids. In evaluating Bids, the County shall require Bidders to be on MoDOT's approved contractor list at least 7 days before the day of the bid opening. The County retains sole authority to determine whether the Bid meets all requirements of the advertisement and proposal, and any alternates, and all unit prices requested in the Bid forms are provided in an acceptable manner.

(24) AWARD OF CONTRACT: This project will be awarded to the lowest, responsive, responsible bidder. Per Section 130.060; Part A(3) of the Jefferson County Code of Ordinances, the County Council reserves the right to give preference and award the contract to a contractor based within Jefferson County when the difference in the delivered price is negligible. The Public Works Department define the term 'negligible' in this section of the Code of Ordinance to mean less that a one-percent (1%) difference in the total bidding price. The County may consider the qualifications and experience of Subcontractors and other persons and organizations (including those who are to furnish the principal items of material or equipment) proposed for those portions of the work as to which the identity of Subcontractors and other persons and organizations must be submitted as provided. Operating costs, maintenance considerations, performance data and guarantees of materials and equipment may also be considered by the County. The County may conduct such investigations as they deem necessary to assist in the evaluation of whether any Bid is responsive in accordance with the Contract Documents to the County's satisfaction within the prescribed time. If the contract is to be awarded, the County will give the Successful Bidder a Notice of Award within sixty days after the date of the Bid opening. Section 39 of the General Provisions set forth the County's requirements as to performance and other Bonds. When the Successful Bidder delivers the executed Agreement to the County it shall be accompanied by the required Contract Security. When the County gives a Notice of Award to the Successful Bidder, it will be accompanied by at least four unsigned counterparts of the Agreement and all other Contract Documents. Within fifteen days thereafter Contractor shall sign and deliver at least four counterparts of the Agreement to the County with all other Contract Documents attached. The County will return one executed Contract Agreement to the Contractor.

(25) FAILURE TO EXECUTE AGREEMENT: Failure to execute the agreement and to file the acceptable contract bonds within 15 days after the unexecuted agreement has been mailed to the bidder, shall be just cause for the cancellation of the award and the forfeiture of the bid guaranty. A bidder failing to file an acceptable bid or contract bond from an approved surety, or failing to execute the agreement within the time provided, shall result in a cancellation of the award to that bidder, and disqualify that bidder, and any other firm having common ownership or control with that bidder, from performing any work on the County project or projects which are the subject of that bid, as a prime contractor, a subcontractor or a supplier.

(26) ITEMIZED BID: The Bidder shall indicate, in U.S. Dollar figures, a unit price for each item on the form, the product of the respective quantities and unit prices in the column provided, the subtotal for each item group, and the gross sum (Total Bid). In case of discrepancy between the gross sum shown on the bid and that obtained by adding the products of the quantities of work and the unit prices, the bidder agrees that the unit prices shall govern, and any errors found in said products and gross sum may be corrected by the County. Bids by corporations must be executed in the corporate name by the president or a vice-president (or other corporate officer accompanied by evidence of authority to sign) and the corporate seal must be affixed and attested by the secretary or an assistant secretary. The corporate address and state of incorporation shall be shown below the signature. Bids by partnerships must be executed in the partnership name and signed by a partner, whose title must appear under the signature and the official address of the partnership must be shown below the signature. The bid shall also satisfy all of the following requirements:

a) Bid Forms must be completed in ink or by typed font. Corrections shall be crossed out and initialed in ink
b) 3 (Three) copies of the entire bid document shall be included with submittal. Only one required to be original ink.
c) Bids submitted in person shall be enclosed in an opaque, sealed envelope, and the Project Title, Project Number, Name and address of the bidder, and contact name and phone number, shall be noted on the outside of the envelope. Bid shall be delivered to the office of the County Clerk, 725 Maple Street, Hillsboro, MO 63050. Bids submitted by mail or delivery system shall include all of the afore mentioned notation, with the sealed envelope placed within an outer envelope for mailing. The outer envelope shall have the notation "BID ENCLOSED". Bids must be stamped as received by the county clerk's office prior to the deadline stated in the Bid Notice, or as noted in any addenda that modifies the bid submittal deadline.
d) The bid shall contain an acknowledgment of receipt of all or no Addenda (shall be completed on the Bid Form).
e) The address, phone number, and email, to which communications regarding the Bid are to be directed, must be shown.
f) Failure to submit the following required documents prior to the bid opening will make the bid non-responsive and not eligible for award consideration:
    a. Complete and Submit Plan Holder's List Form prior to bid submittal (email before bid opening)
    b. Bid Submittal Cover Sheet with bidder's name printed or typed
    c. Instructions and Notices to Contractors initialed on each page, all spaces filled, signed.
    d. Balanced Bid Form, complete, signed, and embossed (if corporation), **addenda acknowledged and 1st sheet attached**.
    e. Bid Guaranty/Bid Bond (Assurance Company's form is valid substitute to generic form herein)
    f. Bidder's Acknowledgement completed and signed
    g. Affidavit of Federal Employment Authorization (Annual Worker Eligibility Verification Affidavit)
    h. Enclose Certificate of Insurance

The County does not assume any responsibility for errors or misinterpretations resulting from the use of incomplete sets of Bidding Documents.

The bidder should complete the following section in accordance with Sec 102.7. The bidder proposes to furnish all labor, materials, equipment, services, etc. required for the performance and completion of the work, as follows:

BIDDER'S INITIALS INDICATING UNDERSTANDING AND ACCEPTANCE_____

BID FORM

TO: JEFFERSON COUNTY, MISSOURI
BID FOR: SCHOOL ZONE SAFETY IMPROVEMENT PROJECT
PROJECT NO. : PW17000TRS

1. The undersigned BIDDER proposes and agrees, if this BID is accepted, to enter into an Agreement with the County in the form included in the Contract Documents to complete all Work as specified or indicated in the Contract Documents for the Contract Price and within the Contract Time indicated in this Bid and in accordance with the Contract Documents.

2. BIDDER accepts all of the terms and conditions of the Instructions to Bidders. This Bid will remain open for sixty days after the day of Bid opening. BIDDER will sign the Agreement and submit all documents required within fifteen (15) days after the COUNTY'S Notice of Award.

3. In submitting this Bid, BIDDER represents, as more fully set forth in the Agreement, that:

   (a) BIDDER has examined the site and locality where the Work is to be performed, the legal requirements (federal, state and local laws, ordinances, rules and regulations) and the conditions affecting cost, progress or performance of the Work and has made such independent investigations as BIDDER deems necessary; and

   (b) This Bid is genuine and not made in the interest of or on behalf on any undisclosed person, firm or corporation and is not submitted in conformity with any agreement or rules of any group, association, organization or corporation; BIDDER has not directly or indirectly induced or solicited any other Bidder to submit a false or sham Bid; BIDDER has not solicited or induced any person, firm or a corporation to refrain from bidding; and BIDDER has not sought by collusion to obtain for himself any advantage over any other Bidder or over the County.

4. Bidder will complete the project for the following unit prices. It is understood that the quantities given for the following bid items are not guaranteed by the Jefferson County Public Works Department and are used solely for the purpose of comparing bids and awarding the contract, and may or may not represent the actual quantities encountered on the job, and that the sum of quantities listed below, multiplied by the unit price shall constitute the gross sum bid.

Bidder will complete the project for the following unit prices. It is understood that the quantities given for the following bid items are not guaranteed by the Jefferson County Public Works Department and are used solely for the purpose of comparing bids and awarding the contract, and may or may not represent the actual quantities encountered on the job, and that the sum of quantities listed below, multiplied by the unit price shall constitute the gross sum bid.

(Enter Unit Prices Beginning on Next Sheet)

SUMMARY OF QUANTITIES						
LINE NO.	ITEM NO.	ITEM DESCRIPTION	UNIT	BID QTY	UNIT PRICE	COST
1	2022010	REMOVAL OF IMPROVEMENTS	LS	1		$ 0.00
2	6169901	TRAFFIC CONTROL	LS	1		$ 0.00
3	6181000	MOBILIZATION	LS	1		$ 0.00
4	9013002	CONDUIT, 2 IN. MIN. RIGID, IN TRENCH	LF	561		$ 0.00
5	9014003	CONDUIT, 2 IN. MIN RIGID, BORED	LF	60		$ 0.00
6	9019902	AC POWERED FLASHING BEACON SYSTEM	EA	7		$ 0.00
7	9019902A	SOLAR PWERED FLASHING BEACON SYSTEM	EA	21		$ 0.00
8	9017411	#2 POWER CABLES, 3 CONDUCTORS	LF	113		$ 0.00
9	9017405	#6 POWER CABLES, 3 CONDUCTORS	LF	621		$ 0.00
10	9018612	POWER SUPPLY ASSEMBLY, TYPE 2, 240/120 VOLT SERVICE	EA	7		$ 0.00
11	9035004	ROADWAY SIGN, TYPE SHR2L-1	SF	57		$ 0.00
12	9031250A	U CHANNEL POST, 3 LB	LF	117		$ 0.00
			PROJECT TOTAL		$ 0.00	

NOTICE TO BIDDER- Bidders must complete the submitted section in its entirety.

5. BIDDER agrees that the work will be completed within **60 Working Days** or the CONTRACTOR shall pay the COUNTY, not as a penalty but as **liquidated damages**, a sum equal to SEVEN HUNDRED **USD $ 700.00** for each day, as defined by Sec 108 of the **2016** Edition of the "Missouri Standard Specifications for Highway Construction", elapsing between the expiration of such time limit plus such extensions as may be necessary to cover contingencies beyond the CONTRACTOR'S control and the date of the full completion.

6. The County reserves the right to negotiate additional terms for the time of completion with the successful bidder.

7. The terms used in this Bid which are defined in the General Provisions of the Construction Contract included as part of the Contract Documents have the meanings assigned to them in the General Provisions.

8. BIDDER has examined copies of all the Contract Documents including but not limited to the Bidder's Checklist, Bid Notice, Instructions and Notices to Contractors, and the following Addenda, if applicable. Bidder must acknowledge all addenda to be considered responsive.

NO.	Date Released	Bidder's Initials	
1	/ /20		
2	/ /20____		*Initial Above if No Addenda is Acknowledged
3	/ /20____		
4	/ /20____		

COMPLETE BID SUBMITTED on _____, 20_____

By_____
(Corporation Name)

_____ _____
(State of Incorporation) (dba Name if Applicable)

By_____ x _____
(Typed Name of Person Authorized to Sign) (Signature of Authorized Person)

_____ (Affix Corporate Seal)
(Title)

Attest_____
(Typed Name of Secretary)

x_____ Business Address:
(Signature of Secretary)

_____

Business Phone: (___)_____-_____ _____

BID BOND

Suitable bid security in the amount of:

_____

($_____) Dollars and equal to five (5%) percent as called for in the advertisement for bids which accompanies this proposal. This sum is to be forfeited to the County of Jefferson if the party or parties making the proposal fail to enter into a contract with the approved securities within fifteen (15) days after the Notice of Award has been made. The undersigned has examined the Plans and Specifications for the work to be done and has satisfied himself as to the work to be done and the conditions under which it must be carried out.

The Contractor shall commence work within three (3) days after the date of a written Notice to Proceed from the County and shall fully complete all work under this proposal within the scheduled time established by the Contract Documents. This proposal shall be equally binding to all heirs, administrators, executors, successors and assigns.

FIRM NAME _____

BY _____

TITLE _____

ATTEST _____

TITLE _____

ADDRESS _____

_____

TELEPHONE _____

BIDDER'S ACKNOWLEDGMENT

(Complete and fill out all parts applicable, and strike out all parts not applicable)

STATE OF_____)
) SS.
COUNTY OF_____)

On this_____ day of _____ 20_____, before me appeared_____ to me personally known, who, being by me first duly sworn, did say that he executed the forgoing Proposal with full knowledge and understanding of all its terms and provisions and of the plans and specifications; that the correct legal name and address of the Bidder (including those of all partners or joint ventures) is fully and correctly set out above; that all statements made therein by or for the Bidder are true; and

(if a sole individual) acknowledged that he executed the same as his free act and deed.

(if a partnership or joint venture) acknowledged that he executed the same, with written authority from, and as the free act and deed of, all said partners or joint venturers.

(if a corporation) that he is the_____
(President or other agent)

of_____; that the above Proposal was signed and sealed in behalf of said corporation by authority of its board of directors; and he acknowledged said proposal to be the free act and deed of said corporation.

Witness my hand and seal at_____,_____ The day and year first above written.

(SEAL) _____
Notary Public

My commission expires_____20_____

ANNUAL WORKER ELIGIBILITY VERIFICATION AFFIDAVIT

(for joint ventures, a separate affidavit is required for each business entity)

STATE OF _____)
) ss
COUNTY OF _____)

On the _____ day of _____, 20____, before me appeared _____, personally known to me or proved to me on the basis of satisfactory evidence to be a person whose name is subscribed to this affidavit, who being by me duly sworn, stated as follows:

•I, the Affiant, am of sound mind, capable of making this affidavit, and personally certify the facts herein stated, as required by Section 285.530, RSMo, to enter into any contract agreement with the state to perform any job, task, employment, labor, personal services, or any other activity for which compensation is provided, expected, or due, including but not limited to all activities conducted by business entities.

• I, the Affiant, am the _____ of _____, and I am duly authorized, directed, and/or empowered to act officially and properly on behalf of this business entity.

•I, the Affiant, hereby affirm and warrant that the aforementioned business entity is enrolled in a federal work authorization program operated by the United States Department of Homeland Security, and the aforementioned business entity shall participate in said program to verify the employment eligibility of newly hired employees working in connection with any services contracted by the Jefferson County. I have attached documentation to this affidavit to evidence enrollment/ participation by the aforementioned business entity in a federal work authorization program, as required by Section 285.530, RSMo.

• I, the Affiant, also hereby affirm and warrant that the aforementioned business entity does not and shall not knowingly employ, in connection with any services contracted by Jefferson County, any alien who does not have the legal right or authorization under federal law to work in the United States, as defined in 8 U.S.C. § 1324a(h)(3).

• I, the Affiant, am aware and recognize that, unless certain contract and affidavit conditions are satisfied pursuant to Section 285.530, RSMo, the aforementioned business entity may be held liable under Sections 285.525 though 285.550, RSMo, for subcontractors that knowingly employ or continue to employ any unauthorized alien to work within the state of Missouri.

• I, the Affiant, acknowledge that I am signing this affidavit as a free act and deed of the aforementioned business entity and not under duress.

_____
Affiant Signature

Subscribed and sworn to before me in _____, _____, the day and year first above-written.
city (or county) state

_____
Public Notary

My commission expires:

[documentation of enrollment/participation in a federal work authorization program attached]

AGREEMENT FORM

THIS AGREEMENT is dated as of _____, in the year ____ by and between JEFFERSON COUNTY, MISSOURI (hereinafter called OWNER OR COUNTY) and _____ (hereinafter called CONTRACTOR).

OWNER and CONTRACTOR, in consideration of the mutual covenants herein after set forth and in the amount of _____, agree as follows:

ARTICLE 1. WORK

CONTRACTOR shall complete all work as specified or indicated in the Contract Documents for the **SCHOOL ZONE SAFETY IMPROVEMENT PROJECT** ,Project No. **PW17000TRS**

The proposed work includes:

The proposed work includes the installation of AC and Solar powered flashing beacon systems, power supply assemblies, conduit, cable, existing sign removal, new roadway signage, utility connections, etc. All work will occur on occupied pubic roadways and within recorded easements. Therefore, MUTCD compliant traffic control shall be

ARTICLE 2. ENGINEER

The County has designated the Director of Public Works, who is hereinafter called ENGINEER and who has the authority assigned to OWNER in the Contract Documents in connection with completion of the Work in accordance with the Contract Documents.

ARTICLE 3. CONTRACT TIME

3.1 The work will be completed and ready for final payment in accordance with Section 30 of the General Provisions within **60 Working Days** after the date when the Contract Time commences to run. Allowances will be made for weather conditions and other occurrences beyond the control of the CONTRACTOR. If the CONTRACTOR is unable to begin work as required, the ENGINEER shall be notified in writing. Unless the ENGINEER gives written approval for a delay in beginning the work, calendar days will begin to be counted for liquidated damages. The count will continue until the CONTRACTOR begins full operation. The count will resume when work is suspended, or full operation is not maintained.

3.2 Liquidated Damages. The Contractor agrees that should he fail to complete work in the time specified or such additional time as may be allowed by the Engineer under this contract, the Contractor shall pay the County, not as a penalty but as **liquidated damages**, a sum equal to **SEVEN HUNDRED ($ 700 .00)** for each day, as defined by Section 108 of the **2016** Edition of the "Missouri Standard Specifications for Highway Construction", elapsing between the expiration of such time limit plus such extensions as may be necessary to cover contingencies beyond the CONTRACTOR'S control and the date of the full completion.

ARTICLE 4. CONTRACT PRICE

4.1 Owner shall pay Contractor for performance of the work in accordance with the contract documents in current funds

SUMMARY OF QUANTITIES						
LINE NO.	ITEM NO.	ITEM DESCRIPTION	UNIT	BID QTY	UNIT PRICE	COST
1	2022010	REMOVAL OF IMPROVEMENTS	LS	1		$ 0.00
2	6169901	TRAFFIC CONTROL	LS	1		$ 0.00
3	6181000	MOBILIZATION	LS	1		$ 0.00
4	9013002	CONDUIT, 2 IN. MIN. RIGID, IN TRENCH	LF	561		$ 0.00
5	9014003	CONDUIT, 2 IN. MIN RIGID, BORED	LF	60		$ 0.00
6	9019902	AC POWERED FLASHING BEACON SYSTEM	EA	7		$ 0.00
7	9019902A	SOLAR PWERED FLASHING BEACON SYSTEM	EA	21		$ 0.00
8	9017411	#2 POWER CABLES, 3 CONDUCTORS	LF	113		$ 0.00
9	9017405	#6 POWER CABLES, 3 CONDUCTORS	LF	621		$ 0.00
10	9018612	POWER SUPPLY ASSEMBLY, TYPE 2, 240/120 VOLT SERVICE	EA	7		$ 0.00
11	9035004	ROADWAY SIGN, TYPE SHR2L-1	SF	57		$ 0.00
12	9031250A	U CHANNEL POST, 3 LB	LF	117		$ 0.00
			PROJECT TOTAL		$ 0.00	

ARTICLE 5. PAYMENT PROCEDURES

Contractor shall submit Application for Payment in accordance with Section 33 of the General Provisions. The Engineer as provided in the General Provisions will process application for Payment.

5.1 Progress Payment. Owner will make progress payments per the Contract Bid Price on the basis of the Contractor's Application of Payment as recommended by the Engineer, on or about the First day of each month during the construction as provided below. All progress payments will be on the basis of the Work measured on the job site according to unit of measurement as shown within the job special provisions or Missouri Standard Specifications.

5.1.1 The Engineer may initiate withholding of retainage as provided by Section 109.9 of the Missouri Standard Specifications for Highway Construction. Release of any retained percentage shall be as provided by Section 109.9.

5.1.2 When the Contractor receives any payment from the Engineer, the Contractor shall make prompt payment to subcontractors and suppliers as provided by Section 109.13 of the Missouri Standard Specifications for Highway Construction.

5.2 Final Payment. Upon final completion and acceptance of the Work in accordance with Section 33 of the General Provisions, Owner shall pay the remainder of the Contract Price as recommended by the ENGINEER.

ARTICLE 6. CONTRACTOR'S REPRESENTATIONS

In order to induce the County to enter into this Agreement CONTRACTOR makes the following representations:

6.1 CONTRACTOR has familiarized himself with the nature and extent of the Contract Documents, Work, locality, and with all local conditions and federal laws, state and local laws, ordinances, rules and regulations that in any manner may affect cost, progress or performance of the Work.

6.2 CONTRACTOR has studied carefully all reports of investigations and tests of subsurface and latent physical conditions at the site of otherwise affecting cost, progress or performance of the Work which were relied upon by the ENGINEER in the preparation of the Drawings and Specifications. When the information is available it will either be included in the bid documents or made available at the Jefferson County Public Works Department for the Contractor's review.

6.3 CONTRACTOR has made or caused to be made examinations, investigations and tests and studies of such reports and related data in addition to those referred to in Article 9 as he deems necessary for the performance of the Work at the Contract Price, within the Contract Time and in accordance with the other terms and conditions of the Contract documents; and no additional examinations, investigations, tests, reports or similar data will be required by CONTRACTOR for such purposes.

6.4 CONTRACTOR has correlated the results of all such observations, examinations, investigations, tests, reports and data with the terms and conditions of the Contract Documents.

6.5 CONTRACTOR has given ENGINEER written notice of all conflicts, errors or discrepancies that he has discovered in the Contract Documents and the written resolution thereof by ENGINEER is acceptable to CONTRACTOR.

ARTICLE 7. CONTRACT DOCUMENTS

The Contract Documents which comprise the entire agreement between OWNER and CONTRACTOR are attached to this Agreement, made a part hereof and consists of the following:

7.1 This Agreement

7.2 Exhibits to this Agreement (if any)

7.3 Contract Performance and Payment and Materials Bonds, consisting of 3 pages.

7.4 Notice of Award

7.5 General Provisions (Pages GP-1 to GP-11, inclusive).

7.6 Specifications bearing the title PROJECT SPECIFICATIONS FOR:
SCHOOL ZONE SAFETY IMPROVEMENT PROJECT, Project No.: **PW17000TRS**
and consisting of all pages as listed in the table of contents thereof.

7.7 Addenda numbers ___ to ___ , inclusive.

7.8 CONTRACTOR'S Bid and all attachments

7.9 Documentation submitted by CONTRACTOR prior to Notice of Award

7.10 Any Modification, including Change Orders, duly delivered after execution of agreement.

There are no Contract Documents other than those listed above in this Article 7. The Contract Documents may only be altered, amended or repealed by a Modification (as defined in Section 35 of the General Provisions).

ARTICLE 8. MISCELLANEOUS

8.1 Terms used in this Agreement which are defined in Section 1 of the General Provisions shall have the meanings indicated in the General Provisions.

8.2 No assignment by a party hereto of any rights under or interests in the Contract Documents will be binding on another party hereto without the written consent of the party sought to be bound; and specifically but without limitation, moneys that may become due and moneys that are due may not be assigned without such consent (except to the extent that the effect of this restriction may be limited by law), and unless specifically stated to the contrary in any written consent to an assignment, no assignment will release or discharge the assignor from any duty or responsibility under the Contract Documents.

8.3 The County and CONTRACTOR each binds himself, his partners, successors, assigns and legal representatives to the other party hereto, his partners, successors, assigns and legal representatives in respect to all covenants, agreements and obligations contained in the Contract Documents.

ARTICLE 9. OTHER PROVISIONS

9.1 Access to records. In connection with this Contract the County shall have access to any books, documents, papers, and records of the CONTRACTOR, which are directly pertinent to this project for the purpose of making an audit, examination, excerpts, and transcriptions.

9.2 Applicable Laws and Regulations. The CONTRACTOR expressly agrees to comply with all applicable rules and regulations as set forth in the Contract Documents or as may be required by law, and further agrees to submit all certifications, notices, and affirmative action plans as may now or hereafter be required, and to place such conditions and provisions in any and all subcontracts as may be required.

9.3 Conflict of Interest. The CONTRACTOR covenants that he or she presently has not interest of any kind and shall not acquire any type of interest, direct or indirect, in the program or any property therein, which would conflict in any manner or degree with the performance of his or her services and obligation hereunder. The CONTRACTOR further covenants that in the performance of this contract, no person known to have any conflicting interest shall be knowingly employed in the performance of this Contract.

ARTICLE 10. VENUE

10.1 It is agreed by the parties that any action at law, suit in equity, or other judicial proceeding to enforce or construe this Agreement, or regarding its alleged breach, shall be instituted only in the Circuit Court of Jefferson County, Missouri.

(THIS SPACE INTENTIONALLY LEFT BLANK)

IN WITNESS WHEREOF, the parties hereto have signed this agreement in quadruplicate. All portions of the Contract Documents have been signed or identified by OWNER and CONTRACTOR or by ENGINEER on their behalf.

FOR: JEFFERSON COUNTY, MISSOURI

BY: _____ Date: _____
COUNTY EXECUTIVE

ATTEST: _____ _____
COUNTY CLERK DEPUTY CLERK

FOR: _____

BY: _____ Date: _____
CONTRACTOR

ATTEST: _____

I hereby certify under section 50.660 RSMo there is either: (1) a balance of funds, otherwise unencumbered, to the credit of the appropriation to which the obligation contained herein is chargeable, and a cash balance otherwise unencumbered, in the treasury, to the credit of the funds from which payment is to be made, each sufficient to meet the obligation contained herein; or (2) bonds or taxes have been authorized by vote of the people and there is a sufficient unencumbered amount of the bonds yet to be sold or of the taxes levied and yet to be collected to meet the obligation in case there is not a sufficient unencumbered cash balance in the treasury.

_____
COUNTY AUDITOR

APPROVED AS TO FORM

_____
COUNTY COUNSELOR

CONTRACT PERFORMANCE BOND

KNOW ALL MEN BY THESE PRESENTS, that we, the Undersigned _____

_____ of _____
(firm)

*a (corporation) duly authorized by law to do business as a construction contractor in the
(partnership)

State of_____(hereinafter called the "Contractor"), and_____

_____ (hereinafter called the "Surety"), a corporation duly authorized to do a Surety business under the laws of the State of Missouri, are held firmly bound unto Jefferson County, (hereinafter called the "County"), in the penal sum of _____ Dollars ($_____), lawful money of the United States, for the payment of which to be made unto said County; we bind ourselves, our heirs, executors, administrators, successors and assigns, jointly and severally, firmly by these presents as follows:

The conditions of this obligation are such that, whereas on the ____ day of _____, 20___, the said Principal entered into a written Agreement, which Agreement is hereby made a part hereof, with the said County for the construction of _____.

NOW THEREFORE, if the said Principal shall faithfully and properly perform the foregoing Contract according to all the terms thereof, and shall, as soon as the work contemplated by said contract is completed, pay to the proper parties all amounts due for all labor and material required by this contract in the construction work, and all insurance premiums for both compensation and all other kinds of insurance on said work, and for all labor performed in such work whether by subcontractor or otherwise, then this obligation shall be void, otherwise it shall remain in full force and effect, and may be sued on for the

use and benefit by any person furnishing material or performing labor, either as an individual or as a subcontractor, for any contractor in the name of said County.

Every Surety on this bond shall be deemed held, any contract on the contrary notwithstanding, to consent without notice.

a) To the extension of time to the Contractor in which to perform the contract.

b) To changes in the plans, specifications, amount of work or contract.

IN TESTIMONY WHEREOF, the Parties hereunto have caused the execution hereof in _____ original counterparts as of the _____ day of _____, 20____.

_____

(SEAL)

Attest:

_____ By _____

_____

(SEAL)

Attest:

_____By _____

PAYMENT AND MATERIALS BOND

KNOW ALL MEN BY THESE PRESENT, that we, _____
Principal and Address

_____, as Principal, and_____,
Surety and Address

as Surety, are held and firmly bond unto The County of Jefferson, Missouri, hereinafter called Obligee, in the amount of $_____, for the payment of which we jointly and severally bind ourselves, our heirs, executors, administrators, successors, trustees, and assigns firmly by these presents.

WHEREAS, the Principal has entered into a contract with Obligee for

_____; and
describe briefly

WHEREAS, the Obligee requires that the Principal enter into a surety bond satisfying the terms of Section 107.170 R.S.Mo.

NOW, THEREFORE, THE CONDITION OF THIS OBLIGATION is such, that if the Principal shall pay, or cause to be paid in full, the claims of all persons performing labor upon, or furnishing materials to be used in, or furnishing appliances, equipment or power contributing to such work under said contract, then this obligation shall be void; otherwise to remain in full force and effect. The total amount of surety's liability under this bond shall in no event exceed the amount hereof, and in no event shall the undertaking hereby be construed to impose liability on the surety beyond that required by the terms of Section 107.170 R.S.Mo.

Signed and sealed this _____ day of _____, 20___.

PRINCIPAL

By _____

SURETY

By _____

(ACKNOWLEDGMENT FOR PRINCIPAL)
(ACKNOWLEDGMENT AND POWER OF ATTORNEY FOR SURETY)

GENERAL PROVISIONS

1) **DEFINITIONS:** The following terms as used in these Contract Documents are respectively defined as follows:

   a) "Owner" - A person, firm, corporation, municipality or Government agency, by which the Contract will be awarded. Where ever the Owner is specified, it shall also be construed to mean his authorized representative.
   b) "Engineer" – County Engineer, Director of Public Works, or any appointed Project Manager.
   c) "Consultant" - The Engineering firm responsible for the preparation of construction plans.
   d) "Contractor" - The person, firm, or corporation to whom the contract is awarded.
   e) "Subcontractor" - A person, firm, or corporation, performing any part of the Contractor's obligations hereunder at the site of work excluding, however, the furnishing of standard materials, such as cement, lumber, and other materials not worked to a special design under the plans and specifications for the work.
   f) "Contract Documents" - The agreement subscribed by the parties, the Invitation to Bidders, Information for Bidders, the Proposal, and the Plans and Specifications.
   g) "Work" - The furnishing of all labor, materials, equipment and other incidentals necessary or convenient to the successful completion and carrying out of all duties and obligations of the Contractor under the Contract Documents.
   h) "Days" - Except where otherwise specifically provided in the Contract Documents, calendar days including Sundays and Holidays.

2) **NOTICE:** Unless otherwise specified herein, any notice required under the Contract Documents shall be deemed given if deposited in the United States mail, first class postage prepaid. Notice may also be given by hand delivery to the authorized representative

3) **INTENT OF THE CONTRACT DOCUMENTS:** The intention of the Contract Documents is to include in the contract price the cost of all labor and materials, water, fuel, tools, plant, equipment, light, transportation and all other expense as may be necessary for the proper execution of the work.

   In interpreting the Contract Documents, words describing materials of work which have a well-known technical or trade meaning, unless otherwise specifically defined in the Contract Documents, shall be construed in accordance with such well-known meaning recognized by architects, engineers and the trade.

   The work shall be executed in strict conformity with the plans and specifications.

   The Contract Documents are complimentary and what is called for by any one shall be as binding as if called for by all. Anything stated in the specifications and not shown in the drawings, or shown in the drawings and not stated in the specifications, shall be of like effect as if shown or stated in both.

4) **PLANS / PROJECT SPECIFICATIONS:** Unless otherwise provided in the Contract Documents, the Plans, Project Specifications and subsequent addendums are available; free of charge, as a downloadable file from the Jefferson County website (http://www.jeffcomo.org/PublicWorksProjects.aspx?nodelD=Purchasing). The Contractor will be responsible for reproducing the plans necessary to carry out all the work.

   In case of discrepancy in the plans, the matter shall be immediately submitted to the Consultant or Owner without whose decision said discrepancy shall not be adjusted by the Contractor, save only at his own risk and expense.

5) **SUPERVISION AND PERSONNEL:** The Contractor shall have at the work site at all times a job supervisor. That individual shall be capable of reading and understanding the project plans and specifications, have authority to order materials and equipment, and have authority to execute work as directed by the Owner. The Contractor shall provide the name and phone numbers of the person appointed as job supervisor prior to issuance of notice to proceed.

   All workers shall have sufficient skill and experience to properly perform the work assigned to them. The owner may demand the dismissal of any person employed by the contractor in, about or upon the work who engages in misconduct, is incompetent or negligent in the due and proper performance of assigned duties, or who neglects or refuses to comply with any proper directions given. Such person shall not again be employed thereon without the written consent of the owner. Should the contractor continue to employ or re-employ any such person, the owner may suspend the work until the contractor complies with such orders.

6) **COMPLIANCE WITH LAWS:** The Contractor shall comply with all laws, ordinances, rules and regulations bearing in the conduct of the work and shall obtain, at his expense, all permits and licenses necessary for the prosecution of the work. Unless provided for in the contract, or granted a waiver, permits required from other departments of the county shall be obtained by the contractor.

The Contractor shall be responsible for the payment of all Federal, State, municipal or local taxes, including but not limited to sales and use taxes, applicable to the performance of the contract, and shall indemnify and hold harmless the Owner, from the consequences of his failure to pay such taxes. **Before award, the lowest bidder shall prove that delinquent property taxes are not owed to Jefferson County, MO, by submitting receipt of payment for last 3 years, or a notarized affidavit, on company letterhead, stating that the bidder does not own any real estate or personal property in Jefferson County.** Past receipts can be obtained from http://jeffersonmo.devnetwedge.com. The engineer may require proof that any or all tax liabilities of the contractor are not in a state of delinquency.

A sales tax exemption for construction materials is allowed by RSMo Section 144.062 RSMo, which applies to contractors for the County. If applicable to this contract, Jefferson County will issue an exemption certificate to the contractors, subcontractors and suppliers for the purchase of materials used in construction.

7) **USE OF JOB SITE:** The Contractor shall confine his equipment, apparatus, the storage of materials and operations of his workmen to limits indicated by law, ordinance, permits, easements or plans and shall not encumber the premises with his materials. The Contractor shall not load or permit any part of any structure to be loaded to the extent that its safety may be endangered.

8) **SANITARY PROVISIONS:** The Contractor shall provide and maintain a neat, sanitary jobsite, and accommodations for the use of his employees as may be necessary to comply with the sanitary requirements of laws or ordinances.

9) **SURVEYS:** The Contractor shall provide all surveys necessary to the performance of his work. All work shall be done to the lines, grades and elevations shown on the plans. Any improperly located items, horizontally or vertically, may be subject to removal and replacement at the Contractor's expense. The Owner or Consultant may, in his sole discretion, check from time to time the reference marks, lines, grades and measurements established by the Contractor but his exercise or failure to exercise such right shall not relieve the Contractor of his obligation as stated herein.

10) **CONDITIONS AT THE SITE:** The Contractor shall make such investigations of conditions above or below the surface of the ground, as he may deem necessary for the proper and timely performance of his work, including but not limited to the making of borings. No oral representations by any persons respecting such conditions shall in any manner be binding upon the Owner or the Consultant.

The Owner may have, for its own use, made borings at or near the site of the work. The boring data, if collected, will be made available to the Contractor, for his own convenience, if he desires to examine it.

Any interpretations or conclusions drawn by the Contractor from such data shall be his own and the Owner makes no representation or guaranty concerning the accuracy or completeness of such data.

11) **UTILITIES AND OTHER OBSTRUCTIONS:** It shall be the sole responsibility of the Contractor in the performance of the contract to locate and avoid all utilities, other structures and obstructions whether located below or above the surface of the ground. For that purpose, he shall employ all necessary precautions and methods to prevent damage to utilities, other structures and obstructions. In the event such damage does occur, the Contractor shall be solely liable therefore and he shall notify the affected utility and Owner immediately, make or have made all necessary repairs and bear the expense thereof and all damage caused thereby.

If the Contractor finds he cannot safely work at a location designated in the plans and specifications, either because of utilities, other structures or obstructions that may be damaged, he shall notify the Owner immediately.

Certain information relating to piping and underground utilities and structures, such as gas mains, water mains, and electric duct lines, has been gathered by the Consultant for its purposes and has been shown on the plans for the convenience of the Contractor and for such use as he may, at his own risk, desire to make of it. Any interpretations or conclusions drawn by the Contractor from such data on the plans shall be his own and the Owner and the Consultant makes no representations or guaranty concerning the accuracy or completeness of such data.

12) **STRUCTURES ENCOUNTERED AND PROTECTION OF LIFE AND PROPERTY:** The Contractor shall, at his own expense, support and protect all buildings, bridges, conduits, wires, water pipes, sewers, pavements, curbing, sidewalks, equipment and fixtures of all kinds and all other public or private property that may be encountered or endangered in the execution of the work herein contemplated. He shall replace, repair or to otherwise make good any damage caused to any such property to the satisfaction of the Owner thereof. In the event the Contractor does not perform his obligations under this provision, the Owner reserves the right, at its election, to make good any damage to public or private property caused by the work of the Contractor and the cost thereof shall be borne by the Contractor. In the event the Contractor refuses or fails to pay bills therefore upon presentation, the Owner may pursue any remedies available to it or may deduct the amount thereof from any money that may be due the Contractor hereunder from time to time.
Throughout the performance of the work, the Contractor shall construct and adequately maintain suitable and safe crossings over the trenches, and such detours as are necessary to care for the public and private traffic. The material excavated from trenches shall be deposited in such manner as shall give as little inconvenience as possible to the traveling public, to adjoining property owners, to other contractors or to the Owner.

All disturbed areas, material stockpiles, and equipment staging areas, shall be protected from erosion. All receiving streams and waterways shall be protected from siltation, pollutants, or any other material considered to be hazardous by any governmental regulator of streams and waterways. Crossings shall be installed for the passage of equipment across any stream or waterway, and allow free passage of water and aquatic life beneath the crossing. The crossing type shall be approved by the engineer prior to installation. Unless otherwise listed as a bid item or incidental to another bid item, the contractor shall satisfy this requirement at his own expense.

The Contractor at his own expense shall provide the necessary watchmen and sufficient warning lights and barricades and take such other precautions as are necessary to protect life and property. The Contractor shall provide watchmen or additional watchmen at any point where they may be requested by the proper official of any municipality or governmental body affected.

Nothing in this section shall be construed as requiring the Contractor to provide a road patrol.

13) **PROTECTION OF WORK:** The Contractor shall provide proper facilities, take all necessary precautions and assume the entire cost for protecting the work against adverse weather conditions and for handling all storm and flood water, sewage, seepage, ice or snow that may be encountered during the performance of the contract and the manner for providing for such contingencies and for carrying on the work in freezing weather shall meet with the approval of the Owner. If the Contractor shall fail to provide such protection or in the event of emergencies, the Owner may provide such protection at the Contractor's expense.

The contractor assumes all risk of damage to or destruction of the work covered by this contract until the work is completed and accepted by the Owner and shall repair or replace at his expense any work damaged or destroyed prior to such completion and acceptance regardless of cause.

14) **ACCIDENT PREVENTION:** Precaution shall be exercised at all times for the protection of persons (including employees) and property. The safety provisions of applicable laws and building and construction codes shall be observed. All persons on site shall have completed, and have the ability to present proof of, a minimum of 10 hour OSHA construction safety training, or other comparable program. See General Provision 43

15) **BLASTING:** The Contractor shall comply with all Federal, State, County and municipal laws, rules and regulations applicable to the transportation, storage or use of explosives. The Contractor shall assume all responsibility for any injury or damage that may be done during the transportation, storage or use of any explosives.

16) **OTHER CONTRACTS:** The Owner may award other contracts for additional work, and the Contractor shall fully cooperate with such other contractors, and carefully schedule and fit his own work to that work provided under the other contract. The Contractor shall not commit or permit any act, which will interfere with the performance of work by any other contractor. It shall be at the sole discretion, and not to be assumed as a guarantee to the contractor, for the engineer to determine if conflicting, overlapping, or neighboring activities, was the sole cause of an unintended delay in the contractors work schedule.

17) **CUTTING AND PATCHING:** The Contractor shall do all cutting, fitting, or patching of his work that may be required to make its several parts connect with the work of other contractors shown upon, or reasonably implied by the plans and specifications. The Contractor shall not endanger any work by cutting, digging, or otherwise, and shall not cut or alter the work of any other contractor.

18) **CLEANING UP:** The Contractor shall at all times keep the premises free from accumulation of waste material of rubbish and at the completion of the work shall remove from and about the site all his rubbish, tools, equipment, scaffolding and surplus materials and shall leave his work clean and ready for use.

19) **SURVEILLANCE AND INSPECTION:** The Contractor shall provide safe, sufficient and proper facilities at all times for the surveillance of work by the Consultant, the Owner, or any other governmental agency that has the right of entry.

The Contractor shall, within 24 hours after receiving written notice from the Owner, proceed to remove all materials rejected by the Owner, whether worked or unworked, and take down all portions of the work, which shall be considered as unsound or improper, or in any way failing to conform to the plans and specifications.

Should it be considered necessary or advisable by the Owner at any time before acceptance of the entire work to make an examination of work already completed by removing or tearing out same, the Contractor shall, on written request, promptly furnish all necessary facilities, labor, and material for that purpose. If such work is found to be defective or nonconforming in any material respect, due to the fault of the Contractor or his subcontractors, he shall defray all the expenses of such examination and of satisfactory reconstruction. If, however, such work is found to meet the requirements of the contract, an equitable adjustment shall be made in the contract price to compensate the Contractor for the additional services involved in such examination and reconstruction and, if completion of the work has been delayed thereby, he shall, in addition, be granted a suitable extension of time.

Unless otherwise provided in this contract, acceptance by the Owner will be made as promptly as practicable after completion of all work required by this contract. Acceptance shall be final and conclusive except as regards latent defects, fraud, or gross mistakes as may amount to fraud, or as regards the Owner's rights under any warranty or guarantee. Acceptance by the Owner may be contingent upon the acceptance by other governmental bodies.

20) **MATERIALS AND WORKMANSHIP:** Unless otherwise stipulated in the specifications, all workmanship, equipment, materials and articles incorporated in the work covered by this contract are to be new and of the best grade of their respective kinds for the purpose. When required by the plans and specifications, the Contractor shall furnish the Owner or Consultant, for approval, certified copies of test results made of the materials or articles, which he contemplates incorporating in the work. Shop Drawings and/or samples of materials shall be submitted for approval when so directed. Machinery, equipment, materials and articles installed or used without such approval shall be at the risk of subsequent rejection. If not otherwise provided, material or work called for in this contract shall be furnished and performed in accordance with established practice and standards recognized by engineers and state transportation officials.

21) **COOPERATION WITH UTILITIES:** All utility facilities and appurtenances, within the project limits, shall be located, or relocated, by the utility owner, unless otherwise specified. Locations of these utilities will be provided by the utility owners, or their provided third party, and may not be exact, particularly with regard to underground installations. The contractor shall use the Missouri One-Call System to satisfy this requirement.

The contractor shall lead the efforts to coordinate with utility owners and the engineer in the location and relocation of utility facilities, to minimize effects upon the contractor's work, interruption to utility service, or duplication of work by the utility owners. Facilities or appurtenances that are to remain in place during construction shall be accounted for, and protected by the contractor's work procedures.

In the event utility services are interrupted, and as a result of damage within the project limits, the contractor shall notify the appropriate utility authorities immediately, and cooperate with the utility owners until service has been restored. Work shall not begin around fire hydrants until provisions for continued service have been made and approved by the local fire authority. When the failure of the owners of utility facilities to cooperate and coordinate their work with that of the contractor results in actual delay to the contractor in the overall completion of the contractor's work, such delay will be considered in the count of working days or date specified for completion as contractor's sole compensation from the County, provided the contractor notified the engineer in writing of the delay at the time the delay occurred.

The contractor shall use every precaution to prevent damage to all public and private utilities. Repairs to damaged utilities caused by negligent or wrongful acts or omissions on the part of the contractor shall be corrected at the

contractor's expense. Damaged facilities shall be restored to a condition similar or equal to that existing before the damage occurred. The utility will designate who shall repair the damaged facility and the contractor shall not make repairs without utility approval.

Should there be located, within the right of way any public or private utility, facilities that are to remain in place, and which will interfere with the contractor's proposed methods of operation, the contractor, in cooperation with the engineer, shall make all necessary arrangements with the owner for any temporary or permanent removal or relocation of such facilities desired for the contractor's convenience. Any cost involved shall be at the contractor's expense.

If utility facilities or appurtenances are found that are not noted in the contract documents and could not be discovered in accordance with Sec 102.5 of the Missouri Standard Specifications, the engineer shall be notified in writing as soon as possible of the conflict and will determine whether relocation of the utility is necessary to accommodate construction. If relocation is necessary, the contractor will make the necessary arrangements with the utility owner. Compensation for the relocation of utilities will be worked out between the County and the utility owner prior to the relocation of any utility. No compensation will be provided to the contractor for coordinating the location and/or relocation of utilities.

22) **"OR EQUAL CLAUSE":** Whenever, in these specifications or in any of the Contract Documents, any article, appliance, device or material is designated by a manufacturer's or vendor's or proprietary or trade name and such words are not followed by the condition "or equal", it shall be deemed that the words "or equal" do follow such designation unless the text clearly requires a contrary interpretation. Any article or material equaling the standards fixed may be used in place of that specifically mentioned by the specifications, provided that the material proposed is first submitted to and approved by the Owner or Consultant. If by reason of the unavailability of material or equipment, a substitute item of material or equipment is approved by the Owner or Consultant, the Owner shall receive the benefit of any economy resulting from the substitution.

23) **SUBLETTING OR ASSIGNING THE CONTRACT:** The bidder is specifically advised that any person, firm, or other party, to whom it is proposed to award a subcontract under this contract, must be acceptable to the County. Second tier subcontracting will not be permitted on this project. It will be the responsibility of the Contractor to insure that his subcontractors do not, in turn, subcontract any portion of the work.

The Contractor shall furnish to the County a signed copy of all subcontracts at or before the pre-construction meeting. This applies to Federal and local projects.

The Prime Contractor must be on MoDOT's approved Contractor Listing unless otherwise stipulated in the contract. The Prime Contractor must also perform with it's own organization, contract work amounting to not less than 30% of the total original contract price. This applies to Federal and local projects.

24) **WARRANTIES AND GUARANTEES:** Clauses that require the contractor to guarantee materials and workmanship and otherwise maintain the work for a specified period after satisfactory completion and final acceptance will not be approved. This is not even permissible as a non-participating bid item.

Routine warranties or guarantees provided by a manufacturer are valid. Contractors' warranties or guarantees providing for satisfactory in-service operation of mechanical and electrical equipment and relates components for a period not to exceed six (6) months following project acceptance are permissible

25) **MATERIAL TESTING:** All project sampling and testing of materials shall be performed by the County or by a consultant employed by the County. The Contractor shall assure that representatives of the County, consultants employed by the County, or MoDOT, has the opportunity to sample and test materials used on this project. Acceptance testing specified to be conducted by LPA or Consultant hired by LPA. Inspector must be MoDOT Certified (EPG 136.11.17.1 and EPG 106.18). Costs associated with providing the sample materials shall be incidental to the cost of the project.

26) **TRAFFIC CONTROL:** All contractor operations, whether within the contract or incidental, shall adhere to the Federal Highway Administration's Manual On Uniform Traffic Control Devices (MUTCD 2009 including revision 1 and 2, May 2012). Unless otherwise listed as a bid item or incidental to another bid item, the contractor shall satisfy this requirement at his own expense.

27) STORM WATER POLLUTION PREVENTION PLAN (SWPPP): The County's Storm Water Pollution Prevention Plan shall be the "Erosion and Sediment Control/Stormwater Management Design Manual" Chapter 505, Jefferson County Code of Ordinances**.** The ordinance can be found at the web address http://www.ecode360.com/JE3328.

For projects without a drawing showing erosion and sediment control measures, the Engineer or his representative will direct what measures are to be used and where they will be placed. Any measures not covered by a pay item or not specifically addressed on the Plans or Specifications as incidental, will be by negotiated price.
Concrete wash down pits shall be utilized for the washing of all concrete trucks. The pits shall be of adequate size to handle all wash down water. The pits shall be lined with a plastic liner (10 mil minimum) to prevent the seepage of the water into the adjoining ground. Berms may be necessary to prevent the migration of any splash water into the streams. The hardened waste from the wash down pits shall be removed and broken into pieces no larger than one cubic foot. The waste concrete pieces may be used as revetment, but will not be considered in measurement for payment. The cost of the wash down pits, berms and disposal shall be incidental to the cost of the concrete.

Contractors shall provide the proper equipment, materials, and labor to perform dewatering measures for all drilling, saw cutting, or any other activity that can result in the creation of drilling "Slurry." Contractors shall submit a dewatering plan at the request of the engineer. Dewatering activity costs shall be incidental to other items in the contract.
Any spillage of hazardous waste shall be cleaned up by the Contractor at no additional cost to the Owner. Measures shall be taken to ensure that no hazardous waste reaches a stream or adjoining property.

Any fines assessed for not following the SWPPP, will be the sole responsibility of the Contractor. If the Owner is fined by a State or Federal agency, liquidated damages in the amount of the fine will be charged to the Contractor by the Owner. Contractor agrees that it shall remit payment for said liquidated damages immediately upon request by Owner. Failure to do so may, at the Owner's option, be considered a breach of contract thereby entitling Owner to such other damages as may result. These damages shall be in addition to the liquidated damages described in this paragraph.

28) SCHEDULE AND PROGRESS REPORTS: The Contractor shall, within 15 calendar days after date of notice to proceed, submit to the Owner a project work schedule, covering all major operations in the work, for the County's review and approval. At the request of the Owner, the diagram shall be updated for relevancy to actual progress.

29) TIME OF COMPLETION AND LIQUIDATED DAMAGES: The parties recognize that time is of the essence of this contract and, after the Contractor receives notice to proceed from the Owner, the work to be performed hereunder shall be commenced and shall be completed within the respective number of days specified in the proposal.

If the Contractor fails to complete the work within the time specified, or any extension thereof granted hereunder, the Contractor should pay the Owner the sum specified in the Contract for each day, as defined by Sec 108 of the **2016** Edition of the "Missouri Standard Specifications for Highway Construction", the Contractor is in default. It is agreed that said daily sum is to be paid, not as a penalty, but as compensation to the Owner as liquidated damages for loss which the Owner will suffer because of such default through increased administrative and engineering costs and other tangible and intangible costs. Such damages may be at the Owner's option, be deducted from any monies held by it which are payable to the Contractor.

The completion of the work included under this Contract is defined for purposes of determining liquidated damages, as that time when all of the structures and appurtenances have been completed and tested and are, in the opinion of the Owner, ready for continuous permanent use and occupancy for the purposes intended, which includes all grading, cleaning up, or other minor work which is required to provide a completed project in accordance with the plans and specifications. At the Owner's discretion, unreasonable response time in the preparation and submittal of any required paperwork may also justify charging of working days or liquidated damages compensation. The date that liquidated damages are no longer applicable shall be the date of final acceptance from the Owner to the Contractor.

30) EXTENSION OF TIME: The Contractor shall not be entitled to any extension of time for completion of the work as herein above specified unless a request for extension is submitted to the engineer within 10 days of the delay, and proves:

a. That such delay arises from unforeseeable causes beyond the control and without the fault or negligence of the Contractor, including but not restricted to, acts of God, acts of public enemy, acts of Government in either its sovereign or contractual capacity, acts of another contractor in the performance of a contract with the Owner, fires, floods, epidemics, quarantine restrictions, strikes, freight embargoes, unusually severe weather, or delays

of subcontractors arising from such unforeseeable causes beyond the control and without the fault or negligence of both the Contractor and such subcontractors; and

b. That the Contractor cannot complete the work within the time specified solely by reason of such causes.

The engineer shall make a determination as soon as practicable after the Contractor's notice is received and shall decide the amount of additional time, if any, for completion of the work which conditions justify. Any time extensions will require approval of the Missouri Highway and Transportation Department and the Federal Highway Administration, as well as the Owner.

31) **FORFEITURE OF CONTRACT:** Should the Contractor at any time refuse, neglect or fail to supply a sufficient number of properly skilled workmen or sufficient equipment or materials of the proper quality, or execute the work with diligence and in accordance with approved schedules, or fail in the performance of any of the covenants herein contained, the Owner may, after three days written notice to the Contractor and his bonding company, provide any such labor, equipment or materials and deduct the cost thereof from any money then due or thereafter to become due to the Contractor under this contract.

Alternatively, the Owner, may after ten days' written notice to the Contractor and his bonding company, terminate the employment of the Contractor for said works and enter upon the premises and take possession of all materials, tools and equipment thereon and finish or contract with others to finish the work. The Owner and such others may use such materials, tools and equipment to finish the work. The Contractor shall not be entitled to rental or other compensation for the use of his construction tools and equipment, but shall only be entitled to the return thereof in the condition existing when possession was taken, ordinary wear and tear excepted. In case of such discontinuance of the employment of the Contractor, the Contractor shall not be entitled to receive any further payment under this Contract until the said work shall be wholly finished, at which time, if the unpaid balance of the amount to be paid under this contract shall exceed the expenses incurred by the Owner to the Contractor, but if such expenses shall exceed such unpaid balance, the Contractor shall pay the difference from money then due or thereafter to become due to the Contractor under this contact. The expense incurred by the Owner as here provided for finishing the work and its cost incurred through such default shall be certified by the Consultant, whose certificate thereof shall be conclusive and binding upon the parties. The remedies of the Owner under this Article are exclusive of and in addition to any other contained in this contract, the Contractor's bonds, or provided by law.

32) **PAYMENTS:** The Contractor, shall receive as full compensation for all accepted work hereunder, a sum equal to the value of the work done based in his proposal, attached hereto and made a part of this contract.

Payment shall be made to the contractor once per month, upon agreement and approval of the contractor submitted pay request. By the 15th calendar day of each month, the Contractor shall submit to the Owner, a pay estimate, in AIA standard format, showing the dollar amount requested for each line item represented in the contract. The engineer may request additional, or alternate invoicing requirements, depending on the structure of the original bid. The final payment shall be paid to the Contractor, subject to final acceptance of construction and approval of the final change order, within 30 days after completion and acceptance of the entire work herein contracted for, and upon receipt by the County, and approval of, all final documentation. Final documentation shall include, but not be limited to:

a. Affidavit, compliance with the prevailing wage law, see sample; form PW-4.
b. Contractor's certification regarding settlement of claims, see sample; Figure XI-8.
c. Contractor's Final Pay Estimate.
d. Letter from contractor stating the total amount paid (final contract amount) for completion of the project.
e. Contractor's Final Lien Waiver and Final Lien Waivers from all subcontractors. The engineer may request proof of payment to material suppliers, and which point, the contractor shall provide this information.
f. Any certified payroll forms that had not been previously submitted.
g. Certifications for materials (where required per project documents or MoDOT standard specifications)

The engineer reserves the right to, at any time, enact payment retainage, up to 10% of each line item. Retainage shall be as stated in General Provision 35

33) **PAYMENTS NO EVIDENCE OF PERFORMANCE:** No certificate for payment made under this contract except the final certificate of final payment, shall be evidence of the performance of this contract, either wholly or in part. No Payment shall be construed to be an acceptance of defective work or improper materials.

34) CHANGES: The Owner and/or the Consultant shall have the right to make changes within the scope of the work or change the quantities of the work to be performed. No such change shall be valid unless made in writing by the Owner or Consultant, approved by the engineer, and adopted by the county council. In the event such changes cause an increase or decrease in the Contractor's cost, or time required for performance of the contract, the contract price and/or period of performance shall be equitably adjusted; provided, the increase or decrease in the amount of the work for which unit prices apply under the specifications shall be computed by multiplying the change in quantities (measured as provided in the contract documents) of such work by such contract prices.

In the absence of a bid price for a given item of work not provided for nor fairly included in the bid prices for other items of work, a written agreement may be made between the Owner and the Contractor to be included in the written order for such extra work. New items specifically covered under Section 109 of the Missouri Standard Specification for Highway Construction, 2016 shall be added to the contract as stated in those specifications. Incidental items, noted anywhere in the plans, specifications, or supplemental specifications, shall not be considered for additional compensation.
Whenever the Contractor and the Owner are unable to agree on prices for extra work and the Owner directly or acting through the Consultant orders the Contractor to proceed with the work by force account, the work will be paid for in the manner herein described and the compensation thus provided shall constitute full payment for said work. All additional work provided by force account shall be calculated and compensated per Section 109.5 of the Missouri Standard Specifications for Highway Construction, 2016.

35) LIENS AND CLAIMS: In addition to other remedies available the Owner hereunder, in all cases of non-payment by the Contractor or a subcontractor of any sums of money due for labor, materials, supplies, equipment or other items in performing in this contract, or if at any time there should be evidence of a lien or claim chargeable to the Contractor or a subcontractor for which, if established, the Owner might become liable, the Owner is hereby authorized and empowered to retain out of any payment then due or thereafter to become due to the Contractor, an amount sufficient to indemnify the Owner against any such lien or claim.

Alternatively, without limiting other remedies and rights of the Owner under the Contract, under the Contractor's bonds or under the law, the Owner may withhold, in addition to the 10 percent retention, a sufficient amount of payments otherwise due to the Contractor to cover payments that may be past due and payable by the Contractor or his subcontractors or suppliers for just claims for labor or materials furnished in and about the performance of the work under this contract and for failure of the Contractor to make proper payments to his subcontractors. The Owner shall disburse and shall have the right to act as agent for the Contractor in disbursing such funds as have been withheld pursuant to this paragraph to the party or parties who are entitled to payment there from. The Owner will render the Contractor a proper accounting of all such funds disbursed in behalf of the Contractor.

36) RESPONSIBILITY: Nothing in the Contract Documents shall be construed as placing the work under the specific direction or supervision of the Owner or the Consultant, or relieving the Contractor from his liability as an independent contractor and, as such, he shall perform his work, including, but not limited to, supervision and control of his own personnel and scheduling of the work as required to ensure its proper and timely performance, and he shall be solely responsible for the exercise of due care to prevent bodily injury and damage to property in the execution of the work. The Owner need not be present to witness installation of materials or performing of a service to deem the product or service unsatisfactory, and order the removal, replacement, installment, repetition, or depreciation of compensable value of the defective material or service.

37) INDEMNIFICATIONS AND INSURANCE:

Contractor's Responsibility for Claims for Damage or Injury: The Contractor and surety shall indemnify and save harmless the County, and its members, agents and employees from all claims or suits made or brought for personal injury, death or property damage, caused or contributed to be caused by:

(a) The negligence of the contractor, subcontractors, suppliers or their respective officers, agents or employees;
(b) The creation or maintenance of a dangerous condition of or on the County's property or right of way, which condition occurred at least in part due to the acts or omissions of the contractor, subcontractors, suppliers or their respective officers, agents or employees; or
(c) The failure of the contractor, subcontractors, suppliers of their respective officers, agents or employees, to perform the work in accordance with the plans and specifications.

Neither the County nor the Contractor, by execution of a contract, shall intend to or create a new or enlarge an existing cause of action in any third party. This provision shall not be interpreted to create any new liability which does not exist under the

statutory limited waiver of sovereign immunity, or to waive or extinguish any defense which either party to this contract or their respective agents and employees may have to an action or suit by a third party.

Contractor's Responsibility for Work: Until the County accepts the work, it shall be in the custody and under the charge and care of the Contractor. The Contractor shall restore and replace, at the Contractor's expense, any lost or stolen County-owned material in the Contractor's custody or control. Damages to any portion of the work before its completion and acceptance, caused by the action of the elements or from any other reason, shall be restored or replaced at the Contractor's expense. Issuance of a payment estimate on any part of the work done will not be considered as final acceptance of any work completed up to that time. The County may, in its discretion, make such adjustments as it considers being proper for damage to the work due to unforeseeable causes beyond the control of, and without fault or negligence on the part of the Contractor.

Liability Insurance Requirements: The Contractor shall procure and maintain at its own expense, until acceptance of the project by the County, liability insurance for all damages and losses imposed by law and assumed under the contract, of the kinds and in the amounts specified in the relevant sections shown herein. Before the Contractor commences the work, the Contractor shall require the insurance company or companies to furnish to the County evidence of such insurance showing compliance with these specifications. All insurance required herein shall be occurrence policies in a form acceptable to the County, and shall remain in force until all work required to be performed under the terms of the contract is satisfactorily completed as evidenced by its formal acceptance by the County.

Each policy or its declaration pages shall provide that the policy shall not be materially changed or canceled until the County has been given at least 30 days advance notice in writing. If any policy is canceled before the contract work is complete, a satisfactory replacement policy must be in force, with notice and evidence of insurance submitted to the County, prior to the effective date of cancellation of the former policy. All evidence of insurance and notices shall be submitted to: Director of Public Works, Jefferson County Public Works Department, 725 Maple Street, PO Box 100, Hillsboro, Missouri 63050. **The Contractor shall furnish the County with a complete copy of the policy prior to the time the Contractor commences work on the site of the project**. Failure to furnish evidence of proper insurance, or complete insurance policies will result in temporary suspension of work and may result in other claims or actions for breach of contract or otherwise, as may be recognized at law or in equity.

Workers' Compensation Liability Insurance: The Contractor shall furnish evidence to the County that, with respect to the operations it performs, it carries workers' compensation insurance, or is qualified as self-insured, sufficient to comply with all its obligations under state laws relating to worker's compensation. The Contractor shall also require each subcontractor on the project to furnish the same evidence to the County. This evidence shall be furnished to and approved by the County prior to the time the Contractor or the subcontractor commences work on the site of the project. **Worker's Compensation Liability Insurance shall be submitted with the bid**

Commercial General Liability Insurance: The Contractor shall obtain one or more occurrence-based policies of commercial general liability insurance (Form CG 00 01 or equivalent), which provide coverage for the contract work. The minimum limits of liability for commercial general liability insurance shall be: $1,000,000 each bodily injury or property damage occurrence, combined single limit, $2,000,000 general aggregate with a per project endorsement and $1,000,000 products/completed operations aggregate. Each such policy shall be endorsed so as to cover liability arising from blasting if applicable, other inherently dangerous activities and underground property damage. Each such policy shall be endorsed to include broad form general liability, contractual liability and completed operations coverage. **Commercial General Liability Insurance shall be submitted with the bid**

Commercial Auto Liability Insurance: The Contractor shall obtain one or more occurrence-based policies of auto liability insurance, which provide for its owned, non-owned and hired vehicles of every type and description, which are used in the contract work. The minimum limits of liability for such insurance shall be $1,000,000 combined single limit. **Commercial Auto Liability Insurance shall be submitted with the bid**

Additional Insureds: Each such policy of commercial general liability insurance shall name the County of Jefferson and its employees as additional insureds. Each commercial general liability insurance policy shall also contain a separation of insureds condition. The insurance afforded by the Contractor shall be primary insurance.

Subcontractor's Coverage: If any part of the contract is subcontracted, each subcontractor, or the Contractor on behalf of the subcontractor, shall obtain the same commercial general liability insurance and commercial automobile liability insurance coverage. The commercial general liability insurance shall name the same entities specified above as additional

insureds, and shall have the same separation of insureds conditions.

Railroad Protective Liability Insurance: In addition to other required liability insurance, the Contractor shall provide railroad protective liability insurance if applicable, for and in behalf of the railroad as outlined in provisions for each project. The insurance policy shall be submitted to the County in original and duplicate for approval. No work will be permitted on the railroad right of way until such approval is granted.

Insurance with Other Than Missouri Companies: Any insurance policy required as specified above, if written by an insurance company organized in a state other than Missouri, shall be signed by an agent or broker licensed by the State of Missouri. In the case of policies written by companies organized in a state other than Missouri, the evidence of insurance submitted as authorized in the contract shall be signed by an agent or broker licensed by the State of Missouri. Nothing in this provision limits or waives the requirement that each insurance policy must be issued by a company authorized to issue such insurance in Missouri.

Third Party Liability: Neither the State of Missouri, the County of Jefferson nor the Contractor, by execution of the contract including these specifications, intend to create a right of action in a third party beneficiary except as specifically set out in these specifications and the contract. It is not intended by any required contractual liability in the contract or in these specifications that any third party beneficiary has a cause of action arising out of the condition of the project when completed in accordance with the plans and accepted by the County.

Personal Liability of Public Officials: There shall be no personal liability upon the County, or any member, employee or agent of the County in carrying out any of the provisions of the contract or in exercising any power or authority granted to them, it being understood that in such matters they act as agents and representatives of the County, with official and public duty doctrine immunity. If any provision of the contract appears to impose a duty on such an individual, the duty remains exclusively that of the County and is not a personal duty or obligation of the individual.

38) **BOND:** The Contractor at his expense shall, before commencing work hereunder, procure and deliver to the Owner a Performance Bond and a Labor and Materials Payment Bond in the amount of 100% of the contract as awarded, as security for the faithful performance of the contract and the payment of all obligations thereunder by the Contractor and his subcontractors. The Bonds shall be written in such form as may be satisfactory to the Owner and provided by a guaranty or surety company listed in the latest issue of U.S. Treasury Circular 570 and the penal sum shall be within the maximum specified for such company in said Circular 570. In substance, the condition of the obligation under said bond or bonds shall be as follows:

"The condition of this obligation is such that if the above bound Principal shall in all respects comply with the terms and conditions of said contract and his obligations thereunder, including the specifications and plans referred to therein, and such changes and alterations as may be made in said contract, specifications and plans and shall indemnify and save harmless the Owner against or from all costs, expenses, damages, injuries or losses to which the said Owner may be subjected by reason of any wrongdoing, misconduct, want of care or skill, negligence of default on the part of said Principal, his subcontractors, officers, agents or employees, in the execution of performance of said contract and shall promptly pay all just claims for damages for injury to property and for labor, equipment, materials and supplies incorporated in the work or consumed in the performance thereof incurred by said Principal, his subcontractors, officers, agents or employees, in or about the construction or improvement contracted for, then this obligation shall be void; otherwise, to remain in full force and virtue in law. The Surety hereby waives notice of any changes, alterations or modifications, including any extensions of the period of performance, in the contract, specifications and plans."

If any surety upon any bond furnished in connection with this contract becomes unacceptable to the Owner, or if any such surety fails to furnish reports as to his financial condition from time to time as requested by the Owner, the Contractor shall promptly furnish such additional security as may be required from time to time to protect the interests of the Owner and of persons supplying labor or materials in the prosecution of the work contemplated by this contract.

39) **ROYALTIES AND PATENTS:** The Contractor shall indemnify, defend, and hold harmless, the Owner and Consultant from all liabilities, decrees, judgments, claims or disbursements, including attorney fees and/or damages and expenses which may come against or be incurred by the Owner or the Consultant by reason of the use of any patented material, machinery, devices, equipment or processes furnished or used in the performance of the work under this contract or the use by the Owner of the completed structure or by reason of the use of patented designs furnished by the Contractor and accepted by the Owner. In the event any claim, action at law or suit in equity of any kind whatsoever is made or brought against the Owner, the Owner shall have the right, without impairment of the foregoing indemnification, to retain from the money due and to become due said Contractor a sufficient amount of money to protect itself against loss.

40) CONFLICTS IN CONTRACT DOCUMENTS: Where any provision of plans, specifications, or any other document referred to or incorporated into the Contract Documents is inconsistent or in conflict with the another provision of the Contract Documents, the order of governance shall be per the revised Section 105.4 of the Missouri Standard Specifications for Highway Construction, as stated in these General Provisions, Provision 44

41) STANDARDS: Where materials and methods are indicated in the specifications as being in conformance with a standard specification, references shall be to the most current available standard at time of the opening of bids.

42) FEDERAL EMPLOYMENT AUTHORIZATION: The Contractor shall comply with the requirements of the revised Statutes of the State of Missouri Chapter sections 285.525 to 285.555. If any part of the contract is subcontracted, each subcontractor shall comply with the same requirements of this specification.

No Contractor shall knowingly employ, hire for employment, or continue to employ an unauthorized alien to perform work within the state of Missouri. As a condition for the award of the contract the **Contractor shall, by sworn affidavit and provision of documentation, affirm its enrollment and participation in a federal work authorization program with respect to the employees working in connection with the contracted services.** Every such **Contractor shall also sign an affidavit affirming that it does not knowingly employ any person who is an unauthorized alien in connection with the contracted services.**

A Contractor may enroll and participate in a federal work authorization program and shall verify the employment eligibility of every employee in the Contractor's hire whose employment commences after the Contractor enrolls in a federal work authorization program.

A general contractor or subcontractor of any tier shall not be liable under sections 285.525 to 285.550 when such general contractor or subcontractor contracts with its direct subcontractor who violates subsection 1 of this section, if the contract binding the contractor and subcontractor affirmatively states that the direct subcontractor is not knowingly in violation of subsection 1 of this section and shall not henceforth be in such violation and the contractor or subcontractor receives a sworn affidavit under the penalty of perjury attesting to the fact that the direct subcontractor's employees are lawfully present in the United States.

43) OSHA TRAINING: The Contractor shall comply with the requirements of the revised Statutes of the State of Missouri Chapter sections 292.675. If any part of the contract is subcontracted, each subcontractor shall comply with the same requirements of this specification.

Any Contractor signing a contract to work on the construction of public works for the Owner shall provide a ten-hour Occupational Safety and Health Administration (OSHA) construction safety program for their on-site employees which includes a course in construction safety and health approved by OSHA or a similar program approved by the department which is at least as stringent as an approved OS11A program. All employees are required to complete the program within sixty (60) days of beginning work on such construction project.

Any employee found on a worksite subject to this section without documentation of the successful completion of the course required under this section shall be afforded twenty (20) days to produce such documentation before being subject to removal from the project. The contractor shall forfeit as a penalty to the Owner two thousand five hundred dollars ($2,500) plus one hundred dollars ($100) for each employee employed by the contractor or subcontractor, for each calendar day, or portion thereof, such employee is employed without the required training. The penalty shall not begin to accrue until the time period in this section has elapsed.

The Owner shall withhold and retain all sums and amounts due and owing as a result of any violation of this section when making payments to the contractor under the contract. The contractor may withhold from any subcontractor, sufficient sums to cover any penalties the Owner has withheld from the contractor resulting from the subcontractor's failure to comply with the terms of this section. If the payment has been made to the subcontractor without withholding, the contractor may recover the amount of the penalty resulting from the fault of the subcontractor in an action maintained in the circuit court in the county in which the public works project is located from the subcontractor.

In determining whether a violation of this section has occurred, and whether the penalty of this section shall be imposed, the Department of Labor and Industrial Relations shall investigate any claim of violation. Upon completing such investigation, the Department shall notify the Owner and any party found to be in violation of this section of its findings and whether a penalty shall be assessed. Determinations under this section may be appealed in the circuit court in the county in which the public works project is located. The Department may establish rules and regulations for the purpose of implementing the provisions of this section.

REVISIONS TO MODOT STANDARD SPECIFICATIONS

Rev. 9/21/16

Modifications to the **2016** Missouri Standard Specifications for Highway Construction shall be as listed herein.

SECTION 102
BIDDING REQUIREMENTS AND CONDITIONS

All references to submitting electronic bids in Section 102 shall be deleted. Please refer to the "Bid Notice" for directions to submit bids on County projects.

Delete Section **102.3 Bidding** – in its entirety and replace it with the following:

102.3 Bidding Documents. Upon request, the County will furnish the bidding documents to the prospective bidder. These documents will generally be available on the County's website for download and viewing. All prospective bidders must complete the registration form titled "PLAN HOLDER CONTACT INFORMATION" to be eligible to bid on the project and in order to receive updated notices. The documents will state the location, description and requirements of the contemplated construction and will show the estimate of the various quantities and kinds of work to be performed or material to be furnished, and will have a schedule of items for which unit bid prices are invited. The bidding documents will state the time in which the work shall be completed, the amount of the bid guaranty, and the date, time and place of the opening of bids.

102.3.1 All papers bound with or attached to or referenced in the bidding documents are considered a part thereof and must not be detached or altered when the bid is submitted.

102.3.2 If applicable, the prospective bidder will be required to pay the Commission the sum stated in the notice of bid opening for each copy of a project's bidding documents. The *Missouri Standard Specifications for Highway Construction, Missouri Standard Plans for Highway Construction,* including all revisions of these documents, and other items referenced in the bidding documents, whether attached or not, will be considered a part of the bid. A prospective bidder will be expected to separately purchase or have access to the current edition of the *Missouri Standard Specifications for Highway Construction* and the *Missouri Standard Plans for Highway Construction,* including all revisions of these documents.

102.3.3 It will be conclusively presumed that all of the bidding documents are in the bidder's possession and that these documents have been reviewed and used by the bidder in the preparation of any bid submitted. The effective dates of the *General Provision & Supplemental Specifications* and the *Supplemental Plans for Highway Construction* will be specified in the contract documents. A copy of the latest version of these documents is available on MoDOT's web site.

Delete Section **102.7 Preparation of Bidding Documents** – in its entirety and replace it with the following:

102.7 Preparation of Bidding Documents. All bids shall be properly signed, sealed and submitted in accordance with Sec 102.10. Each bidder shall specify in the bid, in figures, a unit price for each of the separate items listed in the bidding documents, except a unit price entry will not be necessary for those items having a quantity of one and only the amount for that item need be entered. Zero will be considered a valid bid. The bidder shall not enter zero in any "Unit Price" field unless zero is the intended bid for that item. A unit price left blank, with or without an extension, other than items having a quantity of one, will be considered as zero by the Commission. In case of alternate items, unit prices shall be entered for only one alternate, unless otherwise specified in the bidding documents. A unit price shall not exceed two decimal places. Bids shall not contain interlineations, alterations or erasures except as noted in Sec 102.7.1. The bidder shall show the products of the respective unit prices and quantities in the amount column provided for that purpose. The extension of each line item shall be rounded to the nearest second decimal place value, with half cents rounded up. These extensions shall be totaled and in case of errors or discrepancies in extensions, the unit prices shall govern. All entries in the bid shall be in ink or typewritten. If, in the sole discretion of the engineer, an obvious and apparent clerical error exists in the unit price listed for an item due to a misplaced decimal, but the extension appears to be correct and as intended in all respects, the engineer may correct the unit price bid in accordance with the extension listed. All errors in extensions or totals will be corrected by the engineer and such corrected extensions and totals will be used in comparing bids.

102.7.1 A bidder may alter or correct a unit price, lump sum bid or extension entered on the paper bid form or the computer-generated itemized paper bid form by crossing out the figure with ink and entering a new unit price, lump sum bid or extension above or below in ink, with the bidder's initials.

102.7.2 A bidder may submit a separate bid on any or all projects, except that bids shall be submitted for all projects in a required combination. Bidders not having the ability to simultaneously execute all contracts for bids submitted during a bid opening may state, in one of the bids, the maximum total value of contract awards the bidder is willing to accept for that bid opening. Only one statement of "Maximum Monetary Value of Awards Accepted this Bid Opening" shall be completed per bid opening. In the event a bidder submits multiple statements of maximum award, the lowest value stated will be used. The Commission reserves the right to select and award the combination of bids, not exceeding this maximum, that will be to the best interest of the State, provided these bids are in conformance with the requests for bids. Any corrected bid that exceeds the lowest specified maximum award may be declared non-responsive.

102.7.3 The bid of an individual, including those doing business under a fictitious name, shall include the signature and address of the individual. The signature shall be exactly the same as that appearing on the contractor questionnaire.

102.7.4 The bid by a partnership or joint venture, including individuals doing business under fictitious names or corporations, shall be executed by at least one of the partners followed by the title "Partner" or one of the joint venturers followed by the title "Joint Venturer" and the business address of the partnership or joint venturer shown. The true legal name and address of each partner and joint venturer shall also be shown and shall appear exactly the same as that shown on the contractor questionnaire.

102.7.5 The bid by a corporation, whether acting alone or as a joint venturer, shall show the address and name of the corporation exactly as shown on the contractor questionnaire, and shall include the signature or digital ID and title of a person authorized by its board of directors to bind the corporation.

102.7.6 Each bidder shall submit with each bid a sworn statement, executed by or on behalf of the bidder to whom a contract may be awarded, certifying that the bidder has not, either directly or indirectly, entered into any agreement, participated in any collusion or otherwise taken any action in restraint of free competitive bidding in connection with the bid or any contract that may result from its acceptance.

102.7.7 A bid will not be accepted or considered if the bid is the product of collusion among bidders, if the bidder is disqualified or determined not responsible or if the bid is irregular in accordance with Sec 102.8.

Delete Section **102.9 Bid Guaranty** – in its entirety. *(See Section 11 of the "Instructions and Notices to Contractors" in the bid documents)*

Delete Section **102.11.1** in its entirety.

SECTION 105
CONTROL OF WORK

Delete Section 105.1- Authority and Duties of Commission in Contract Administration - items (a) through (h) that pertain exclusively to MoDOT and not to the County of Jefferson.

Revise 105.4 - Coordination of Contract Documents. - such that the governing ranking will be as follows:

(a)	Job Special Provisions
(b)	Project Specific Drawings
(c)	General Provisions
(d)	Revisions to MoDOT Standard Specifications
(e)	General Special Provisions
(f)	Supplemental Specifications
(g)	Standard Specifications
(h)	Standard Drawings
(i)	Bid Items or Quantities

In case of discrepancies, calculated dimensions will govern over scaled dimensions.

SECTION 107
LEGAL RELATIONS AND RESPONSIBILITY TO THE PUBLIC

If a Corps of Engineers 404 Permit or Department of Natural Resources Section 401 permit is applicable for a project, then the permit requirements and conditions will prevail over Section 107.10.

SECTION 109
MEASUREMENT AND PAYMENT

Delete Section 109.9.1.2 of Division 109.9 - Retained Percentage - in its entirety.

Delete Section 109.14 – Price Adjustment for Fuel - in its entirety.

SECTION 201
CLEARING AND GRUBBING

Add the following to Section 201.2.2.1 **Clearing**:

(e) All branches hanging lower than 18 feet above the finish roadway surface shall be removed over all lanes of traffic, including up to 3 feet outside the traveled edge of pavement.

SECTION 203
ROADWAY AND DRAINAGE EXCAVATION,
EMBANKMENT AND COMPACTION

Modify Section 203.3.1 of Section 203.3 – Borrow – as follows:

Replace the first sentence with the following: Borrow will consist of approved material required for the construction of embankment or for other portions of the work, and shall be obtained from borrow areas shown on the plans, from areas designated by the engineer, or from other approved sources.

Modify Section 203.4 as follows:

Delete the reference in Section 203.4.1 that states, "Finishing by hand methods will not be required,…": Replace with the following:

Hand raking or fine grading by mechanical means of the disturbed areas shall be required to remove debris and stones. The soil shall be tilled to a depth of 4" and graded to a reasonably smooth surface. All brush, weeds, excess mud and silt, or other debris shall be removed from culverts and channels within the scope of the work in accordance with Sec 104.11.2, even if such structures are used in place.

Replace Section 203.4.1.1 with the following:

Field Stone. Before final project acceptance, the removal and disposal requirements of all loose field stones shall be guided by the following table:

Location - limits	Limits	Maximum Stone Size
Residential and business where lawns are maintained	All disturbed areas	Relatively free of stones – ½" maximum
Foreslopes, roadside ditches and backslopes outside of maintained lawn areas	Right of way	1" maximum
Rock cut sections	All disturbed areas	As directed by the Engineer

SECTION 206
EXCAVATION FOR STRUCTURES

Replace Section 206.5.2 – with the following: “Final measurement of Class 3 Excavation for pipe culverts, utilities, retrofit pipe culverts, drop inlets or manholes will be made to reflect the actual computed quantity established from field measurements. The plan quantities were estimated based on the random boring data and visual observations of the adjacent existing ditch lines. The revision or correction will be computed and added to or deducted from the contract quantity. Measurement of Class 3 Excavation will be made to the nearest cubic yard for each structure of that volume of material actually removed from within the area bounded by vertical planes of 12 inch minimum to 18 inches maximum outside of the outer walls of the structure. The upper limits of the volume measured, will be the existing ground line, or the lower limits of the roadway excavation, whichever is lower. The lower limits of the volume measured will include excavation necessary for pipe bedding.

SECTION 304
BASES AND AGGREGATE SURFACES

Delete Section 304.3.5 - Substitutions for Aggregate Base - in its entirety.

Modify Section 304.5 – Method of Measurement – as follows:
Final measurement of the completed aggregate base course will be based on actual field measurements to the nearest square yard.

Replace Section 304.6 - Basis of Payment – with the following: “The accepted quantities of aggregate base course of the thickness and type specified will be paid for at the contract unit price for each of the pay items included in the contract. Payment will be considered full compensation for water used in performing this work.”

SECTION 401
PLANT MIX BITUMINOUS BASE AND PAVEMENT

Section 401.4 Job Mix Formula – The County may waive submission of representative mixture samples. The Contractor, at the time he submits his job mix formula, shall request in writing whether samples are required. The County will respond in writing and if samples are required, they shall be submitted within ten working days of receipt of the County’s letter.

Section 401.4.1 Mixture Design – Modify this paragraph as follows:

The mix design shall be submitted to the County for approval at least seven (7) days prior to mixture production. A mix design shall be submitted for all County projects. The composition of the mixture shall conform to the following limits by weight:

Total Mineral Aggregate	94.0-96.5 %
Asphalt Binder	3.5-6.0 %

Add the following item to Section 401.4.2 – Required Information:

(q) Unit weight of combined mixture.

Modify Section 401.4.3 Mixture Approval so that “the County” is substituted where it presently reads “Construction and Materials”.

Delete Section 401.5.2 Substitutions - in its entirety.

Delete Section 401.6 Field Laboratory – in its entirety.

Delete Section 401.7.1 and replace with the following:

401.7.1 Weather Limitations. Bituminous mixtures shall not be placed (1) when either the air temperature or the temperature of the surface on which the mixture is to placed is below 40 F (5 C), (2) on any wet or frozen surface, or (3) when weather conditions prevent the proper handling or finishing of the mixture. Temperatures are to be obtained in accordance with MoDOT Test Method TM20.

If a rainfall event occurs (with rain duration lasting more than 5 min.) before 10am on any given workday, then paving operation shall be cancelled for the balance of that workday and the contractor is not charged for the workday. Once a rainfall event begins the contractor is to immediately shut down plant mix operation. No pavement materials will be accepted at the construction site until further notice from engineer. At the contractor's request, the engineer may waive these requirements on an individual basis.

401.7.5.1 Irregularities. Add a sentence preceding the sentence "The outside edge alignment shall be uniform" as follows: The outside edges of the pavement shall be constructed to an angle of approximately 45 degrees with the surface of the roadbed and rolled with a hand roller for a smooth appearance.

Replace Section 401.8 Quality Control with the following:

The Contractor shall maintain equipment and qualified personnel or retain the services of a qualified testing laboratory to perform QC field inspection, sampling and testing in accordance with applicable portions of Section 403. The testing service shall be a firm different than the one retained by the County for testing services on that project. The Contractor shall notify the Engineer at the preconstruction meeting who he intends to use for testing services, the name of a contact person and his or her telephone number. A proposed third party testing service for dispute resolution shall be included with the mix design submittal.

Replace the last sentence in Section 401.8.4 Pavement Testing with the following:

The Contractor shall restore the surface from which samples have been taken immediately with the mixture under production or with a non-shrink concrete grout. A cold patch mixture will not be acceptable.

Replace Section 401.13 Method of Measurement with the following:

Measurement will be in accordance with Sec 403.22 and as modified by the job special provisions.

SECTION 402
PLANT MIX BITUMINOUS SURFACE LEVELING

Delete Section 402.2.2 – in its entirety.

Add the following sentence to the beginning of Section 402.3 Composition of Mixture:

Mixture shall meet the requirements of the asphalt type specified in the contract and/or bidding documents.

Section 402.4 – Replace with the following:

402.4 Job Mix Formula. The mixture shall be in accordance with Sec 401.4 and shall conform to the following limits by weight:

Total Mineral Aggregate	92.0-96.5 %
Asphalt Binder	3.5-8.0 %

Delete Section 402.9 - in its entirety.

SECTION 403
ASPHALTIC CONCRETE PAVEMENT

Delete Section 403.4.1 – in its entirety.

Replace "Construction and Materials" in Section 403.4.3 with "the Engineer".

Section 403.6 – Delete the first sentence in its entirety. Revise the fourth sentence to read: "The gyratory compactor shall be one from MoDOT's Construction and Materials approved list."

Delete Section 403.10.2 Substitutions – in its entirety.

Section 403.11.1 Field Mix Redesign – Replace “Central Laboratory” with “Engineer”.

Section 403.11.1.1 Approval – replace “Construction and Materials” with “the Engineer”. Delete the second sentence in this section.

Modify the first sentence of 403.17.1 Quality Control Operations – to read “The Contractor shall maintain or retain equipment and qualified personnel to perform all QC field inspection, sampling and testing as required by this specification.” Add the following sentence: “The personnel, if from an independent testing laboratory, shall be different than the company retained by the County for QC purposes.”

Section 403.17.2 Bituminous Quality Control Plan – Change “Construction and Materials” to “the Engineer”.

Revise the last sentence of 403.22.4.2 Surface Restoration to read: “If bituminous construction has been completed, the surface from which samples have been taken shall be restored within 48 hours with an approved commercial mixture or with an approved non-shrink concrete grout. Cold mix is not an acceptable patch.

Delete Sections 403.23.5 through 403.23.7.3 inclusive.

SECTION 407
TACK COAT

Add Section 407.4.1.1 Weather Limitations. Tack coat shall not be applied when either the air temperature or the temperature of the surface to be tacked is below 40 F. Temperatures are to be obtained in accordance with MoDOT Test Method TM20.

SECTION 408
PRIME COAT

Add Section 408.4.1.1 Weather Limitations. Bituminous material shall not be applied (1) when either the air temperature or the temperature of the surface to be primed is below 60 F or (2) when weather conditions prevent the proper construction of the prime coat. Temperatures are to be obtained in accordance with MoDOT Test Method TM20.

SECTION 413
SURFACE TREATMENTS

Replace “Construction and Materials” in Section 413.30.3 with “the Engineer”.

Replace “Construction and Materials” in Section 413.30.3.1 with “the Engineer”.

Revise Section 413.30.6.1 as follows: **Quality Control Operations.** Quality control shall be conducted in accordance with Sec 403.17 as modified herein by the “**REVISIONS TO MODOT STANDARD SPECIFICATIONS**”, except as follows.

SECTION 501
CONCRETE

Section 501.3 Mix Design. – Change the last sentence to read:

“The Contractor may be required to submit representative samples of each ingredient to the Engineer for laboratory testing.”

Revise Section 501.8.2 (e), the fifth sentence, “The Engineer may allow the use of the test concrete for appropriate incidental construction”, shall be deleted. In its place add the following sentence – “Test concrete shall not be used in construction”.

Revise Section 501.8.10 to delete the Type 1 field laboratory at the proportioning plant.

SECTION 502
PORTLAND CEMENT CONCRETE BASE AND PAVEMENT
Delete Section 502.3.7 - in its entirety.
Revise the first sentence in Section 502.11.1 to read, "Prior to approval of concrete mix designs by the engineer, the contractor shall submit a QCP to the County."

Delete Section 502.15.3 Smoothness Adjustment – in its entirety.

Delete Section 502.15.3.1 Incentives – in its entirety.

Table I shall be revised so that "Percent of Contract Price" does not exceed 100.

Delete Sections 502.15.6 Width, 502.15.7 Pay Factors, and 502.15.11 PWL Determination Table in their entirety.

SECTION 601
FIELD LABORATORIES

Delete this Section in its entirety.

SECTION 603
WATER LINE INSTALLATION

Revise Section 603.2 - Material. To include the following sentence after the table:

Materials other than those shown may be specified by the Engineer and shall meet AWWA, ASTM, ANSI and NSF specifications.

Revise Section 603.3.4 - Abandoned Water Mains. To include the following at the end of this section:

8" and larger abandoned water mains remaining under the completed road and or shoulder shall be abandoned by grout filling the line. Grout shall consist of Mortar for Grout as specified in Section 1066. The cost of the grout, plugs, labor, fuel and equipment shall be included in the lump sum unit cost for "Removal of Improvements". Smaller watermains shall be abandoned as noted above by capping and covering the cap with concrete. PVC watermains may be capped with caps made of the same material, glued in place.

SECTION 605
UNDERDRAINAGE

Delete Sections 605.10.2.5 through 605.10.2.5.3 in their entirety. Video inspection of edge drains will not be required.

SECTION 620
PAVEMENT MARKING
Replace the second through fourth sentences of Section 620.2.3.1, with "The engineer will visually inspect the pavement markings for reflectivity. The inspection will take place no sooner than seven days after application. The contractor may clean any pavement markings at the contractor's expense prior to the visual reflectivity inspection.

Replace Section 620.2.4.1 with the following:

620.2.4.1 Retroreflectivity inspection will be performed visually. Spotty or lack of reflectivity when driven during a nighttime visual inspection will be cause for reapplying the pavement marking at no additional cost to the County.

Revised Section 620.10.5.1 to read:

Final measurements of pavement markings of the type specified will be based on actual field measurements to the nearest lineal foot. Revisions or corrections will be computed and added or deducted from the contract quantity.

SECTION 622
PAVEMENT AND BRIDGE SURFACE REMOVAL AND TEXTURING

Revised Section 622.10.4 to read:

Final measurements of coldmilling of the type specified will be based on actual field measurements to the limits shown on the plans or as directed by the Engineer, and computed the nearest square yard. Revisions or corrections will be computed and added or deducted from the contract quantity.

SECTION 627
CONTRACTOR SURVEYING AND STAKING

Add the following to the end of Section 627.2.1:

In addition, the Contractor shall protect and carefully preserve all official survey monuments, property marks, section markers and Geological Survey Monuments, or other similar monuments. The Contractor shall notify the Engineer of the presence of any such survey or property monuments as soon as they are discovered.

Revised Section 627.2.3 to read:

The project will generally have set control points with known coordinates provided by the design consultant. The engineer will furnish all coordinate data to lay out the job and locate benchmarks as shown on the plans. Except as specified herein, the contractor shall provide all other staking, including but not limited to, centerline stakes, right of way stakes, additional lines, connections, ramps, slope stakes, grade stakes, construction benchmarks and reference stakes locating all drainage, roadway and bridge structures, and utilities necessary for the successful prosecution of the work. Centerline staking shall be done before construction begins and shall be established at all PIs, PCs, PTs and at 100 foot intervals within the proposed project limits, including any temporary transition lengths outside the projects limits. Right of way staking shall be a maximum of 200 feet apart on tangents, at angle changes in the right of way and a maximum of 50 feet apart in horizontal curves, on both sides of the road, at all parcel property lines, and shall be done at the initial start of the project to facilitate relocation of utilities. Right of way stakes shall indicate cuts and fills to final grade for help in determination of utility placement. The contractor shall maintain construction stakes for the duration of the project at no additional cost to the County. All alignment control established by the contractor shall be referenced, and a copy of the references shall be furnished to the engineer.

Revised Section 627.2.4 to read:

Any surveying or measurements necessary for computing pay quantities, except for earthwork pay items which quantities are based on cross sections measurements, will be performed by the engineer. The contractor shall notify the engineer at least two working days prior to disturbing any areas used to calculate pay items.

Earthwork pay items which quantities are based on cross section measurements shall have “before” and “after” cross sections performed by the contractor. The contractor shall notify the engineer prior to surveying the cross sections so that a field representative, designated by the engineer, can be present to witness and record and/or verify the readings. The contractor shall cooperate with the designated field representative in coordinating the surveying activities.

Add the following to the end of Section 627.4:

Should it be necessary to disturb any survey or property monument (grading, install structure), a Missouri Professional licensed surveyor shall witness and reference their location, and reset such monument after construction work is completed and before final acceptance of project. The cost to protect, preserve and provide any surveying work to reset survey or property monuments will not be paid for separately, but shall be considered as included in the cost of the project, and no additional compensation shall be allowed.

SECTION 703
CONCRETE MASONRY CONSTRUCTION

Add a sentence to the end of Section 703.3.8 -Surface Sealing for Concrete – that reads: “Surface sealing shall not be applied until after all defects in the bridge deck surface have been patched per the Engineer’s requirements.”

SECTION 706
REINFORCING STEEL FOR CONCRETE STRUCTURES

Delete the last sentence in Section 706.2.2 that allows flame cutting of uncoated reinforcement. Reinforcement shall be saw cut or sheared.

Delete the sentences in Section 706.3.1 that reads: "For bridge decks and top slabs of culverts, bars in the top mat shall be tied at all intersections except where spacing is less than or equal to 12 inches in each direction, in which case alternate intersections shall be tied. At other locations, the bars shall be firmly tied at alternate crossings or closer." Replace this sentence with: "All reinforcement, including superstructure and substructure, shall be tied at 100% of crossing locations."

SECTION 712
STRUCTURAL STEEL CONSTRUCTION

Delete the sentence in Section 712.3 that reads: "Any material that has become bent shall be straightened before being assembled or shall be replaced, if necessary." Replace it with the following: "Any material that has become bent from the intended shape shall be replaced at no cost to the County."

SECTION 720
MECHANICALLY STABILIZED EARTH WALL SYSTEMS

Delete Section 720.3.1 - in its entirety and replace with the following:

The Contractor shall submit product information on the type of mechanically stabilized earth wall system he is proposing. The wall shall be in conformance with the Plans and Job Special Provisions. Shop drawings and design calculations shall be submitted and shall be signed and sealed by a Professional Engineer registered in the state of Missouri.

SECTION 724
PIPE CULVERTS

Revise Section 724.3.1 to read:

Inspection of pipe and pipe placement will be performed visually by the County during construction.

Delete Sections 724.3.2, 724.3.3, 724.3.4, 724.3.4.1, 724.3.5, 724.3.6, 724.3.7, 724.3.8, and 724.3.9.

Revise Section 724.4.1 to read:

Final measurements of pipe culverts of the type specified will be based on actual field measurements to the nearest lineal foot along the geometric center of the pipe. Revisions or corrections will be computed and added or deducted from the contract quantity.

SECTION 725
METAL PIPE AND PIPE ARCH CULVERTS

Revise Section 725.4 to read:

Backfill material for metal culverts shall consist of crushed stone.

Revise Section 725.4.1 to read:

Crushed stone shall consist of a mixture of stone in accordance with Section 1009, Grade 4, Gradation B. For all pipe culverts under roadways or sidewalks crushed stone backfill shall be used for full depth of the trench, and to the subgrade of the road, and to a point two feet on either side of the pavement width. For backfill under grass areas, the granular

backfill shall be brought to one foot above the top of the pipe, then completed with earthen backfill to the required grade. Bedding material shall be the same as that specified above for backfill.

SECTION 726
RIGID PIPE CULVERTS

Delete Section 726.1.2.

Modify the sixth sentence in Section 726.3.1 to read:

All joints shall be sealed with an approved plastic compound, tubular joint seal, an external wrap, cement mortar or other approved methods to create a soil tight condition.

Modify 726.3.2 **Bedding** to read:

Bedding for reinforced concrete pipe shall consist of a mixture of stone in accordance with Section 1009, Grade 4, Gradation B.

Section 726.3.4 - Insert the following after the second sentence:

For all pipe culverts under roadways or sidewalks crushed stone backfill, meeting the requirements of Section 1009, Grade 4, Gradation B, shall be used for full depth of the trench, and to the subgrade of the road, and to a point two feet on either side of the pavement width. For backfill under grass areas, the granular backfill shall be brought to one foot above the top of the pipe, then completed with earthen backfill to the required grade.

SECTION 727
STRUCTURAL PLATE PIPE AND STRUCTURAL PLATE PIPE-ARCH CULVERTS

Delete 727.3.3 Bedding and Backfill material and replace with the following:

727.3.3 Bedding and Backfill Material. Bedding for structural plate pipe and structural plate pipe-arch culverts shall consist of a mixture of stone in accordance with Section 1009, Grade 4, Gradation B, except if rock is encountered, the trench shall be excavated to a minimum depth of 8 inches below the bottom of the culvert.

Delete Section 727.3.4.1 and Section 727.3.4.2 and replace with the following:

Backfill shall be with crushed stone consisting of a mixture of stone in accordance with Section 1009, Grade 4, Gradation B. Stone backfill shall be used for full depth of the trench, and to the subgrade of the road, and to a point two feet on either side of the pavement width. Layers of backfill shall be carefully tamped in place and shall be kept at approximately the same elevation on opposite sides of the structure at all times during the progress of work in order to equalize the loading.

SECTION 731
PRECAST REINFORCED CONCRETE MANHOLES AND DROP INLETS

Revise Section 731.4.1 to read:

Final measurements of precast concrete manholes and drop inlets will be based on actual field measurements to the nearest lineal foot along the geometric center of the manhole/drop inlet. Revisions or corrections will be computed and added or deducted from the contract quantity. The depth of the structure will be the vertical distance from the top of the uppermost precast section to the invert flowline.

SECTION 732
FLARED END SECTIONS

Delete the second sentence in Section 732.5 that reads:

When two different diameters of pipe are shown on the plans for a given location for Group B or Group C pipe, the contract unit price for the flared end section or safety slope end section that would be required for the larger diameter pipe will be used for payment purposes.

SECTION 801
LIME AND FERTILIZER

Revise the third sentence in Section 801.4.1 to read:

The soil shall be thoroughly broken up, worked, tilled and loosened to a minimum depth of 4 inches.

Revise the second sentence of 801.4.2 to read:

After application, the lime and fertilizer shall be thoroughly mixed into the soil to a minimum depth of 4 inches, except when applied hydraulically on slopes steeper than 2:1.

SECTION 802
MULCHING

Add the following to Section 802.1 **Description**.:
If a specified stabilization covering is not indicated in the contract, mulch overspray shall be applied over rocky type soils. In all other cases the contractor shall have the options of mulch overspray, embedment, or other methods as approved by the engineer.

SECTION 803
SODDING

Add the following to Section 803.3 Construction Requirements:

Sodding placed at the downstream end of a flared end section or the downstream end of a pipe without a flared end section shall be securely fastened with metal clips. The sod shall be placed slightly lower than the flowline of the flared end section or the flowline of the culvert. Sod washed away by flows through the culvert shall be cleaned up, disposed of and replaced by the Contractor at no additional charge to the County.

SECTION 804
TOPSOIL

Add Section 804.3.3 The Contractor shall be responsible for obtaining all necessary permits for removal of topsoil from an area. This shall include but not be limited to land disturbance, stormwater discharge, endangered species, farmland protection, wetlands, hazardous waste and cultural resources. Contact agencies for most of these are listed on MoDOT's website under Local Public Agency Manual.

SECTION 805
SEEDING

Revised the following under Section 805.3 **Construction Requirements**:
805.3.1 The seedbed shall be prepared in accordance with Sec 801. Seeding shall be done before the seedbed becomes eroded. Seed shall be uniformly applied at no less than the rates specified in the contract provisions. If no seeding rates are shown in the contract documents, the following seeding and fertilizing rates shall be used:

(pure live seed per acre)		
Tall Fescue	60%	120 lbs per acre
Orchard Grass	20%	40 lbs per acre
Annual Rye	20%	40 lbs per acre
	Total	200 lbs per acre

(based on pure nutrients, no filler)	
Nitrogen	80 lbs per acre
Phosphoric Acid	80 lbs per acre
Potash	80 lbs per acre
Total	240 lbs per acre

Revise 805.3.2 to read:

805.3.2 Disturbed areas outside of authorized construction limits shall be seeded at the contractor's expense, unless such disturbed areas are adjacent to the construction limits and caused by utility relocation/adjustment work. Disturbed areas caused by such utility work shall be prepared and seeded as directed by the Engineer.

Add Section 805.3.4:
805.3.4 Seeding application methods shall be as follows:
Drop seeding shall only be allowed in small disturbed areas as approved by the engineer; Drill seeding shall be allowed for flat areas and slopes up to 3(H):1(V); and
Hydro seeding shall be required on slopes 3(H):1(V) or steeper.

Revise Section 805.4 to read:
805.4 Acceptance. Acceptance of permanent seeding will be made when seeded disturbed areas meet the requirements for final stabilization as defined as a minimum uniform 70% perennial vegetative cover over disturbed land areas. Inspection for acceptance will be made within 60 days after seeding excluding seeding dates that fall between September 30 and March 1. Seeding that occurs between September 30 and March 1 will be inspected no earlier than May 1.

SECTION 806
POLLUTION, EROSION AND SEDIMENT CONTROL

Revise 806.4.4 to read as follows:

Erosion control features shall be in place prior to any clearing and grubbing of the construction site. Additional erosion control features may need to be installed as the project continues and problem areas become exposed. Until the site is stabilized, all erosion and sedimentation control BMPs must be maintained properly. Maintenance must include inspections of all erosion and sedimentation control BMPs after each rainfall event and on a weekly basis. A written inspection report by the contractor shall be submitted to the engineer after every inspection. The report shall state a summary of the site conditions, status of the erosion and sediment control BMPs, date, time and name of inspector. The Contractor shall maintain all erosion control features by removing silt buildup so that the erosion control feature is fully effective. Any erosion control features knocked down during construction shall be reinstalled at no additional cost to the County.

Add a paragraph to 806.80.3 as follows:

The Contractor shall maintain the temporary pipes throughout the length of the project. Pipes, backfill and road surface washed out shall be replaced at no additional cost to the County.

Add the following sentence to 806.100.2.2:
The Contractor shall maintain the temporary stream crossing throughout the length of the project. Pipes, backfill and road surface washed out shall be replaced at no additional cost to the County.

END OF "REVISIONS TO MODOT STANDARD SPECIFICATIONS"

Job Special Provisions

Table of Contents

A. GOVERNING SPECIFICATIONS AND DEFINITION CHANGES
B. WORKING DAYS
C. TRAFFIC CONTROL
D. RESPONSIBILITY OF THE CONTRACTOR
E. SITE RESTORATION
F. FLASHING BEACON INSTALLATION
G. SOLAR PANEL INSTALLATION
H. UTILITIES
I. REMOVAL OF IMPROVEMENTS

A. GOVERNING SPECIFICATIONS AND DEFINITION CHANGES

The general requirements, provisions and technical specifications governing the completion of the work contemplated shall be the Missouri Standard Specifications for Highway Construction, 2016 edition, including supplemental revisions, and are made a part of this contract, although not reproduced herein. Current Specifications and supplemental revisions can be found at www.modot.org

The Job Special Provisions, General Special Provisions and other requirements are contained within these Job Specifications.

The Job Special Provisions, General Special Provisions and the Construction Drawings shall take preference over all other documents whenever any disagreement exists.

All reference to the "Commission" made in the above said Missouri Standard Specifications shall be interpreted as the Jefferson County Public Works Department, Jefferson County, Missouri.

All reference to the "Engineer" made in the above said Missouri Standard Specifications, shall be interpreted as the County Director of Public Works/Highway Engineer, Jefferson County Public Works Department, Hillsboro, Missouri.

All reference to the "State" made in the above said Missouri Standard Specifications shall be interpreted as Jefferson County, Missouri.

B. WORKING DAYS

This is not a bid item. Working days will be charged per Section 108 of the above said Standard Specifications except as follows:

Delete Part (a) of Section 108.8.1.3. Liquidated damages will NOT be charged from December 15 through March 15, both dates inclusive.

C. TEMPORARY TRAFFIC CONTROL

Temporary traffic control shall consist of furnishing, installing, maintaining, relocating and removing all traffic control devices in accordance with MUTCD, MoDOT EPG standards, and these provisions. Traffic control signs shall be provided at each end of the project, each intersection with another public roadway, and at each major private development contributing to 10% or more of traffic volumes. All temporary traffic control devices shall be in place one week prior to beginning of construction. The roadway must remain open to traffic throughout construction and traffic delays kept to the minimum. Flagging operations and signage shall be provided for each mobile operation. Flagmen should be provided with two-way radios and safety vests. Stop/Slow paddles are preferred over flags. Basis of Payment for temporary traffic control shall be per the lump sum bid price and shall include all labor, material, equipment, and mobilization.

The contractor shall provide access to commercial entrances / approaches at all times.

Contractor operations shall maintain at least one lane of access to all commercial entrances at all times during work to construct the bituminous base widening through asphalt or gravel commercial entrances unless alternate arrangements are coordinated with the business

owner. If at least one lane of access cannot be provided and alternate arrangements cannot be made, the contractor shall provide temporary surfacing to safely park all business vehicles in close proximity to the driveway and off Manchester Road as approved by the engineer. No direct payment will be made for temporary surfacing if required.

School Driveways. The contractor shall coordinate all work near the school driveways with the appropriate School. Contractor operations shall maintain at least one lane of access to school driveways at all times.

Payment for all work necessary to comply with this provision, including the preparation of the Construction Phasing Plan and all traffic management schedules, shall be completely covered by the contract unit bid prices for the applicable pay items included in the contract.

D. RESPONSIBILITY OF THE CONTRACTOR

It is the responsibility of the contractor to maintain a clean and safe work zone for both the workers and the general public. Special steps may be necessary to ensure safety for everyone. This includes but is not limited to: Special flagging techniques to adequately space traffic, enforcement of the work zone speed limit, and approved safety wear for everyone within the work zone.

E. SITE RESTORATION

1.0 Description. The contractor shall restore, to its original, any disturbed areas at sites including, but not limited to sidewalk, ramp, driveway, conduit, signs, and pole base installations. Restoration shall be accomplished by placing material equivalent to that of the adjacent undisturbed area. Disturbed unpaved areas shall be seeded and strawed, as directed by the engineer. The engineer will have the final authority in determining the acceptability of the restoration work.

2.0 If the contractor elects and receives approval from the engineer for alternate trench and/or sign locations, any areas of concrete slope protection, sidewalk, pavement, shoulders, islands and medians – as well as any similar improvements consisting of asphaltic concrete materials – removed in conjunction with their construction shall be replaced with improvements of similar composition and thickness. Removals shall be achieved by means of full depth saw cuts, the resulting subgrade compacted to minimum density requirements and topped with 4 inches of compacted aggregate base course prior to replacement of surface material. Concrete materials used in replacement shall be approved by the engineer. A commercial asphalt mix may be used for replacement of asphaltic surfacing upon approval of the engineer.

2.1 Unless quantities and pay items for removal and subsequent replacement of improvements are contained in the plans for a specific location of removal work, no direct payment will be made for full depth saw cutting and the removal and subsequent replacement of asphalt or concrete slope protection, sidewalk, pavement, shoulders, islands, medians, sod, and the required dowel and tie bars and pull boxes. This work will be considered as included in the various unit bid prices for items established in the contract, and no additional payment will be made.

2.2 Sidewalks and sidewalk ramps that are disturbed as described in this provision shall be replaced to meet current ADA standards.

3.0 Basis of Payment. No direct payment will be made for any materials or labor which is performed under this provision.

F. A/C POWERED FLASHING BEACON INSTALLATION

1.0 Description. This work shall consist of furnishing all labor and materials necessary to:

a) replace the existing zone school speed limit signs, or install a new flashing school zone beacon system per manufacturers recommendations
b) program included timer equipment to County specifications

2.0 Existing Sign Components. The existing sign and appurtenances shall become the property of the contractor on removal.

3.0 Construction Requirements. Construction requirements shall conform to manufacturer's recommendations and meet MUTCD requirements.

3.1 Contractor shall determine and complete all appropriate wiring and programming associated with this work as recommended by the beacon system manufacturer. Contractor shall provide electronic documentation including:

a) updated system prints indicating all back panel wiring
b) timer switch wiring
c) timer programming
d) other documentation requested by the engineer

4.0 Method of Measurement. The work provided in accordance with this Job Special Provision will not be measured for payment, but will be considered a lump sum unit.

5.0 Basis of Payment. On acceptance of the flashing beacon system installation, complete in place and operational to the satisfaction of the engineer, flashing beacon installation will be paid for at the contract lump sum price for "9019902 – AC Powered Flashing Beacon System."

G. SOLAR POWERED FLASHING BEACON INSTALLATION

1.0 Description. This work shall consist of furnishing all labor and materials necessary to:

a) replace the existing zone school speed limit signs, or install a new flashing school zone beacon system per manufacturers recommendations
b) program included timer equipment to County specifications
c) The solar panel shall be installed facing adequate sunlight, primarily facing south, in accordance with manufacturers recommendations. The panel should be point away from obstructions that may interfere with the operation of the solar panel.

2.0 Construction Requirements. Construction requirements shall conform to manufacturer's recommendations.

2.1 Contractor shall determine and complete all appropriate wiring and programming associated with this work as recommended by the solar panel manufacturer. Contractor shall provide electronic documentation including:

a) updated system prints indicating all back panel wiring
b) other documentation requested by the engineer

3.0 Method of Measurement. The work provided in accordance with this Job Special Provision will not be measured for payment, but will be considered a lump sum unit.

4.0 Basis of Payment. On acceptance of the solar panel installation, complete in place and operational to the satisfaction of the engineer, solar panel installation will be paid for at the contract lump sum price for "9019902A – Solar Powered Flashing Beacon System."

H. UTILITIES

For informational purposes only, the following is a list of names of the known utility companies in the area of the construction work for this improvement:

Utility Name	**Known Required Adjustment**
Ameren Missouri	No
Laclede Gas	No
Missouri American Water	No
AT&T	No
Lightcore	No
Charter Communications	No
MoDOT St. Louis District	No

The existence and approximate location of utility facilities known to exist, as shown on the plans, are based upon the best information available to the County at this time. This information is provided by the County "as-is" and the County expressly disclaims any representation or warranty as to the completeness, accuracy, or suitability of the information for any use. Reliance upon this information is done at the risk and peril of the user, and the County shall not be liable for any damages that may arise from any error in the information. It is, therefore, the responsibility of the contractor to verify the above listing information indicating existence, location and status of any facility. Such verification includes direct contact with the listed utilities.

I. REMOVAL OF IMPROVEMENTS

Removal of improvements, including but not limited to signs, poles, wire, and appurtenances are to be retained by Jefferson County Public Works.

The cost of all removal shall be included in the lump sum unit cost for "Removal of Improvements".

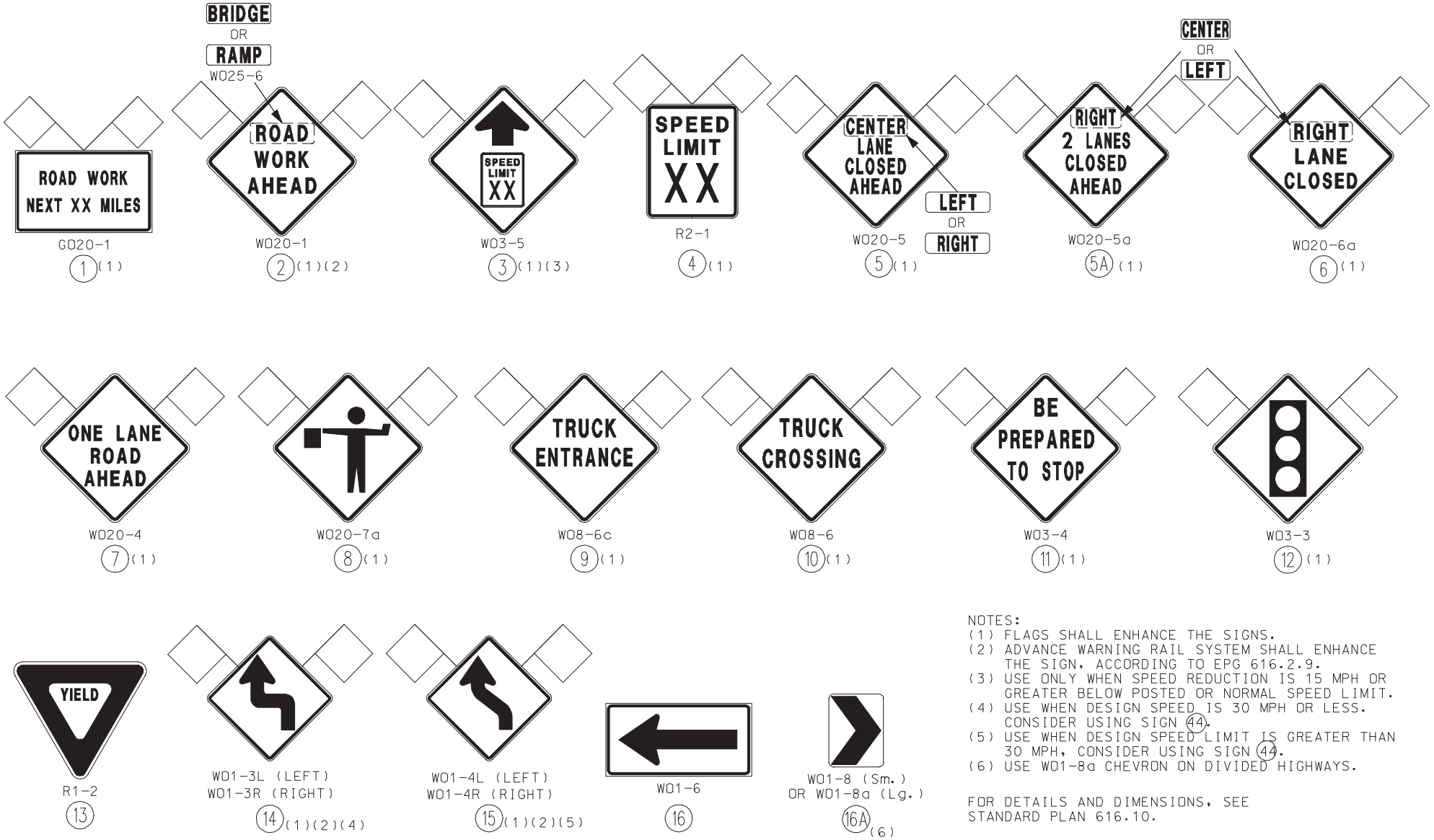

NOTES:
(1) FLAGS SHALL ENHANCE THE SIGNS.
(2) ADVANCE WARNING RAIL SYSTEM SHALL ENHANCE THE SIGN, ACCORDING TO EPG 616.2.9.
(3) USE ONLY WHEN SPEED REDUCTION IS 15 MPH OR GREATER BELOW POSTED OR NORMAL SPEED LIMIT.
(4) USE WHEN DESIGN SPEED IS 30 MPH OR LESS. CONSIDER USING SIGN 44.
(5) USE WHEN DESIGN SPEED LIMIT IS GREATER THAN 30 MPH, CONSIDER USING SIGN 44.
(6) USE W01-8a CHEVRON ON DIVIDED HIGHWAYS.

FOR DETAILS AND DIMENSIONS, SEE STANDARD PLAN 616.10.

Signs and Devices Legend

Figure 616

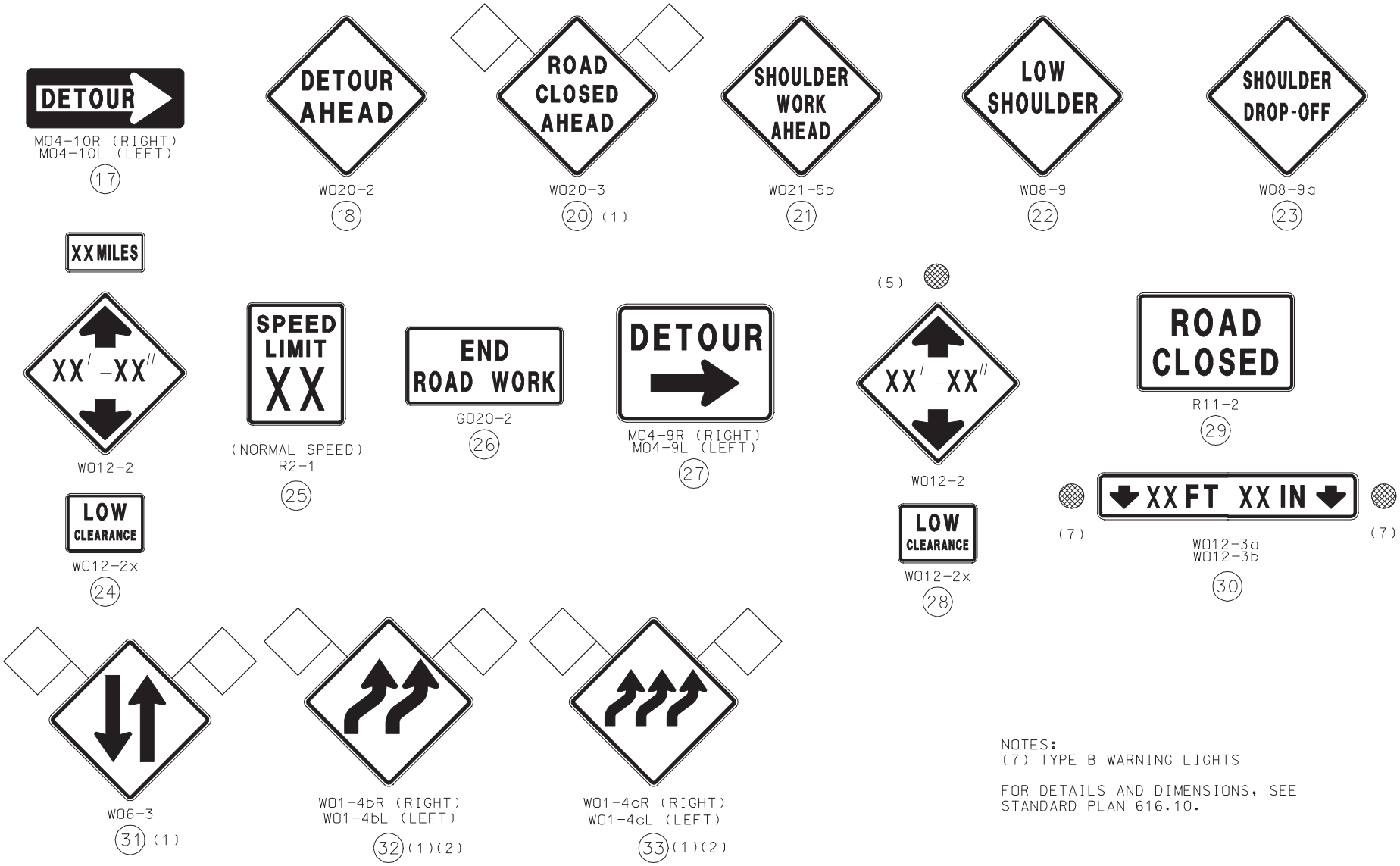

NOTES:
(7) TYPE B WARNING LIGHTS

FOR DETAILS AND DIMENSIONS, SEE STANDARD PLAN 616.10.

Signs and Devices Legend

Figure 616

W05-5
34 (1)(2)

W08-12
35 (1)

W08-11
36 (1)

W01-2L (LEFT)
W01-2R (RIGHT)
37 (1)(2)(5)

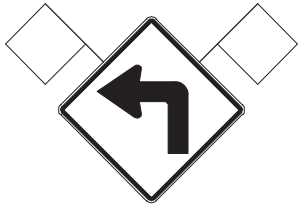

W01-1L (LEFT)
W01-1R (RIGHT)
38 (1)(2)(4)

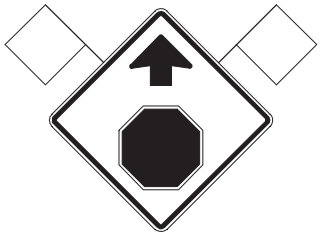

W03-1a
39 (1)

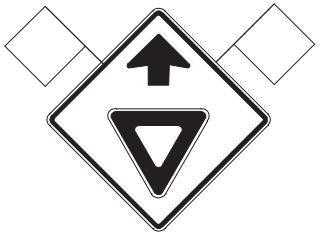

W03-2a
40 (1)

R1-1
41

R1-3
41A (8)

R4-7a
42

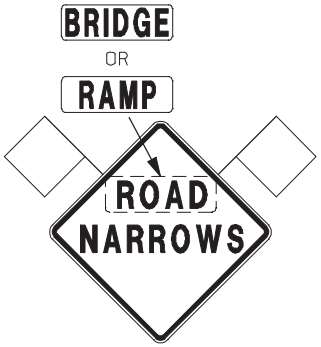

W05-1
43 (1)

W013-1
44 (9)(10)

W07-3a
44A (9)

R4-1
46

R4-2
46A

R10-6
47

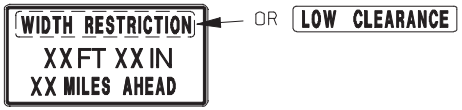

48

NOTES:
(8) ONLY FOR USE WITH STOP SIGN WHEN CONDITION EXISTS. FOR ONE-WAY OR TWO-WAY STOP, A PLATE IS NOT USED.
(9) ONLY USED IN COMBINATION WITH WARNING SIGN.
(10) SHOULD BE USED WHEN THE DESIGN SPEED IS LESS THAN THE POSTED WORK ZONE SPEED.
FOR DETAILS AND DIMENSIONS, SEE STANDARD PLAN 616.10.

Signs and Devices Legend

Figure 616

E05-1

49

M04-8a

52

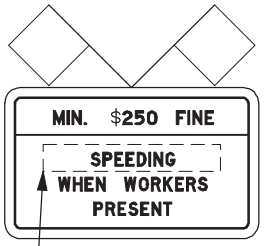

CONST -3A

53 (1)

OR

CONST -3X

53A

G023-1

54

TEMPORARY RAISED
PAVEMENT MARKERS

TUBULAR MARKERS

CHANNELIZERS (11)

DIRECTIONAL INDICATOR
BARRICADES

TYPE F TEMPORARY CONCRETE
TRAFFIC BARRIER

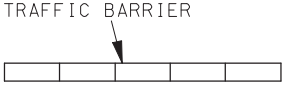

END TREATMENT

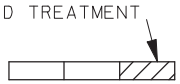

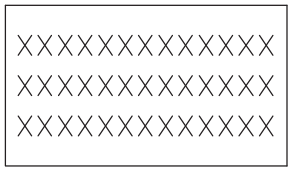

CHANGEABLE
MESSAGE SIGN (CMS)

TYPE III
MOVABLE
BARRICADE

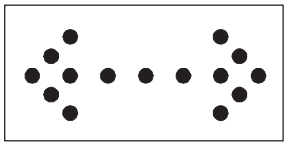

FLASHING
ARROW PANEL

FLAGGER

NOTES:
(11) CONES ALLOWABLE FOR DAYLIGHT OPERATIONS
ON MINOR ROADS ONLY.

FOR DETAILS AND DIMENSIONS, SEE
STANDARD PLAN 616.10.

Signs and Devices Legend

Figure 616

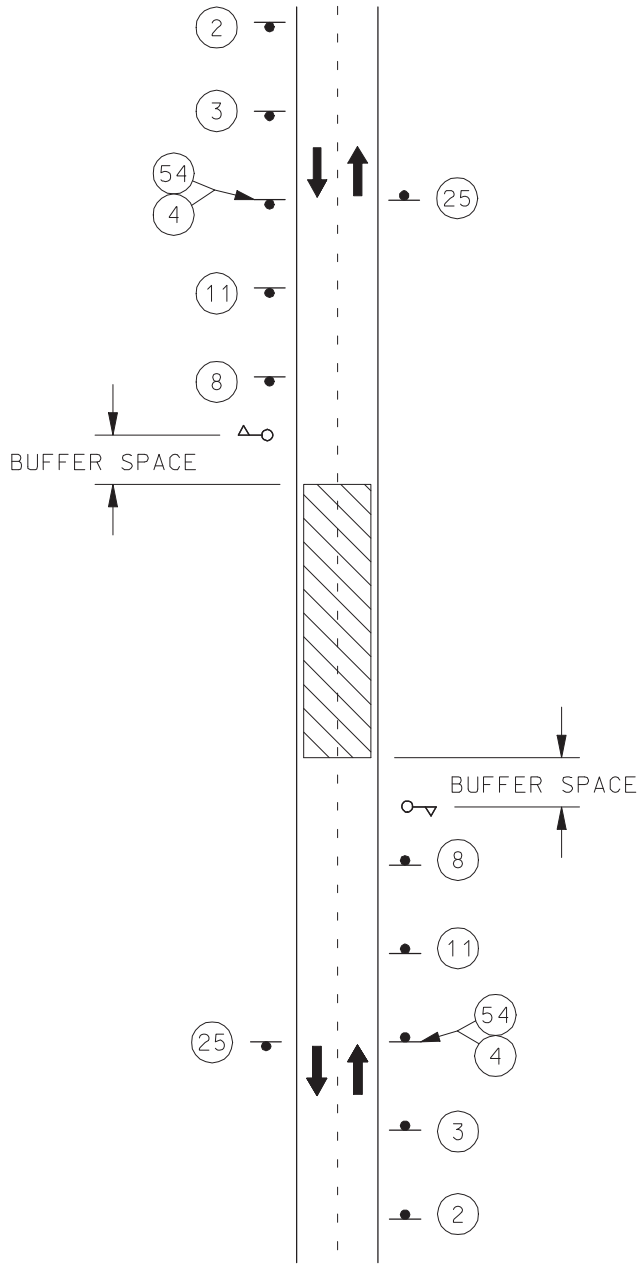

NOTES:

A CMS MAY BE USED IN ADDITION TO THIS SIGNING.

PROVIDE SIGNS ON LEFT AND RIGHT SIDE OF DIVIDED HIGHWAYS.

SIGNS 3, 4, 25 AND 54 NOT NEEDED IF CLOSURE IS LOCATED IN THE LIMITS OF AN ACTIVITY AREA WHERE AN APPROPRIATE SPEED LIMIT, EITHER NORMAL OR REDUCED, IS ESTABLISHED.

SIGN 2 NOT NEEDED IF CLOSURE IS LOCATED WITHIN THE LIMITS OF AN ACTIVITY AREA WHERE ANOTHER SIGN 2 IS ALREADY USED.

SEE FIGURE 616.1.2 FOR SIGN SPACING.

Temporary Road Closure

Figure 616.0.3

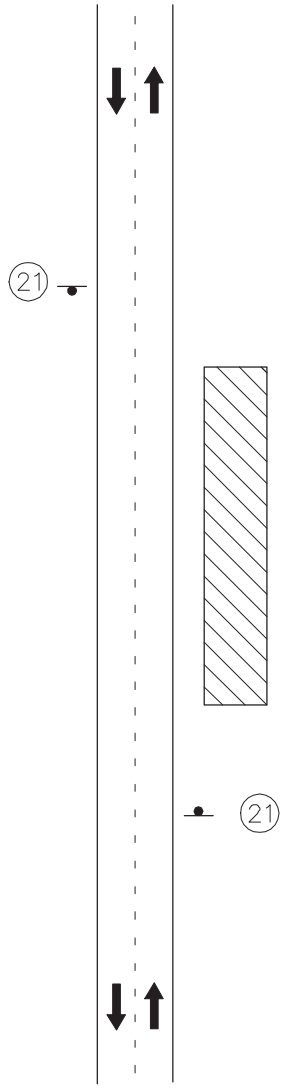

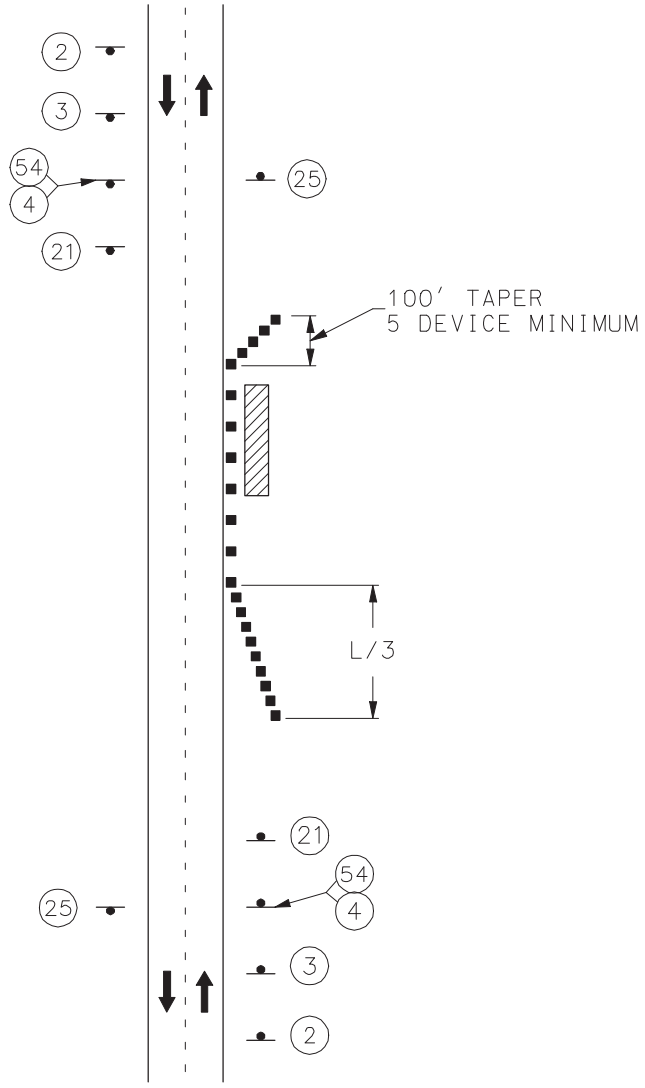

NOTES:

ONLY APPLICABLE WHEN WORK IS WITHIN THE CLEAR ZONE.

PROVIDE SIGNS ON LEFT AND RIGHT SIDES OF DIVIDED HIGHWAYS.

SEE FIGURE 616.1.2 FOR SIGN SPACING.

Work Beyond Shoulder

NOTES:

PROVIDE SIGNS ON LEFT AND RIGHT SIDES OF DIVIDED HIGHWAYS.

SIGNS 3, 4, 25 AND 54 NOT NEEDED IF SHOULDER WORK IS LOCATED WITHIN THE LIMITS OF AN ACTIVITY AREA WHERE AN APPROPRIATE SPEED LIMIT, EITHER NORMAL OR REDUCED, IS ESTABLISHED.

SIGN 2 NOT NEEDED IF SHOULDER WORK IS LOCATED WITHIN THE LIMITS OF AN ACTIVITY AREA WHERE ANOTHER SIGN 2 IS ALREADY USED.

SEE FIGURE 616.1.2 FOR SIGN SPACING, DEVICE SPACING AND CHANNELIZING TAPER LENGTHS.

Work on Shoulder with No Travelway Encroachment

Shoulder Work
Figure 616.0.4

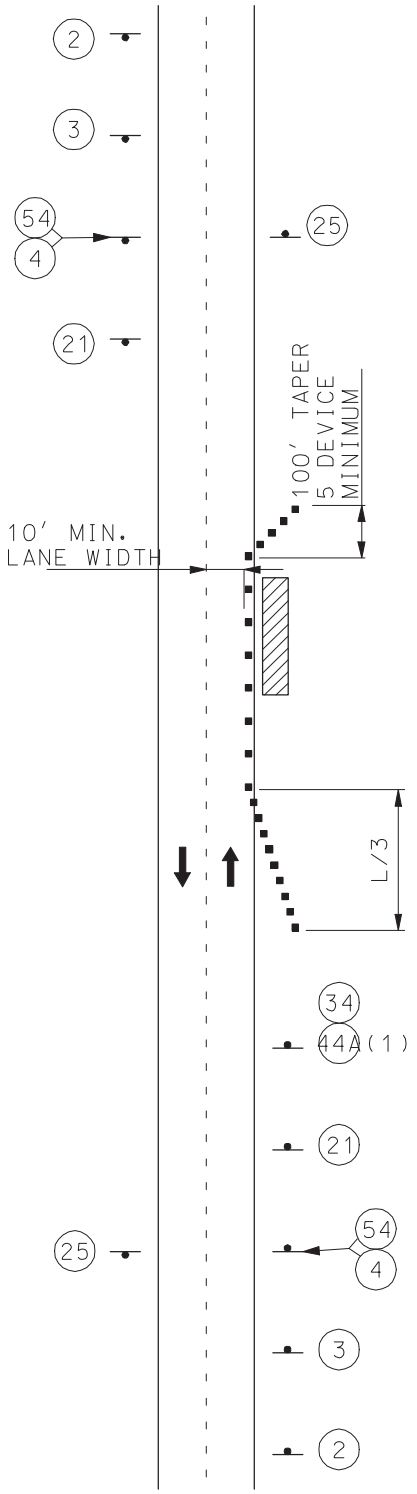

NOTES:

PROVIDE SIGNS ON LEFT AND RIGHT SIDE OF DIVIDED HIGHWAYS.

Minor Travelway Encroachment

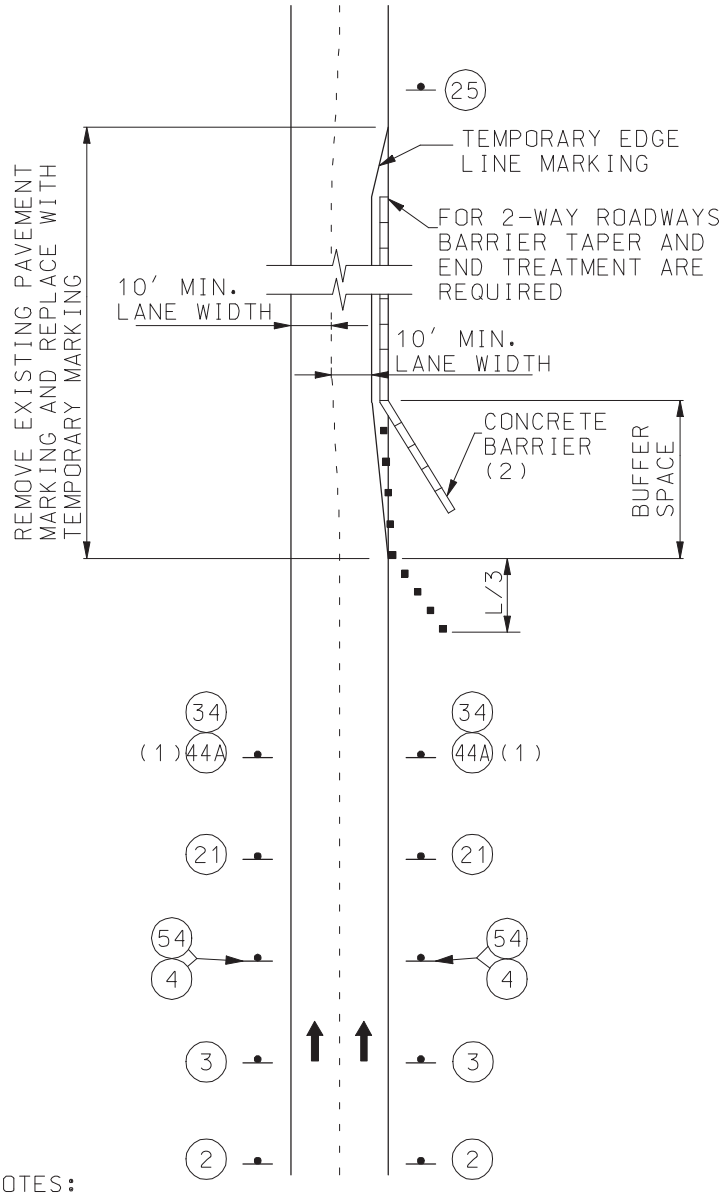

NOTES:

IF SHOULDER IS SUITABLE FOR CARRYING TRAFFIC, LANES MAY BE SHIFTED TO SHOULDER WITH APPROPRIATE PAVEMENT MARKING.

ON NON-DIVIDED HIGHWAYS, PROVIDE SIGNS ONLY ON THE RIGHT SIDE OF EACH APPROACH.

Reduced Lane Widths

GENERAL NOTES:

SEE FIGURE 616.1.2 FOR SIGN SPACING, DEVICE SPACING AND CHANNELIZING TAPER LENGTHS.

SIGN 2 NOT NEEDED IF SHOULDER WORK IS LOCATED WITHIN THE LIMITS OF AN ACTIVITY AREA WHERE ANOTHER SIGN 2 IS ALREADY USED.

SIGNS 3 , 4 , 25 AND 54 NOT NEEDED IF SHOULDER WORK IS LOCATED WITHIN THE LIMITS OF AN ACTIVITY AREA WHERE AN APPROPRIATE SPEED LIMIT, EITHER NORMAL OR REDUCED, IS ESTABLISHED.

(1) SIGN 44A NOT REQUIRED FOR NARROW LANE SECTIONS LESS THAN ONE MILE.
(2) FLARE BARRIER TO EXTEND BEYOND CLEAR ZONE OR FLARE BARRIER TO EDGE LINE AND USE APPROVED END TREATMENT.

Shoulder Work

Figure 616.0.4

Public Road Crossing Another
Road Under Construction

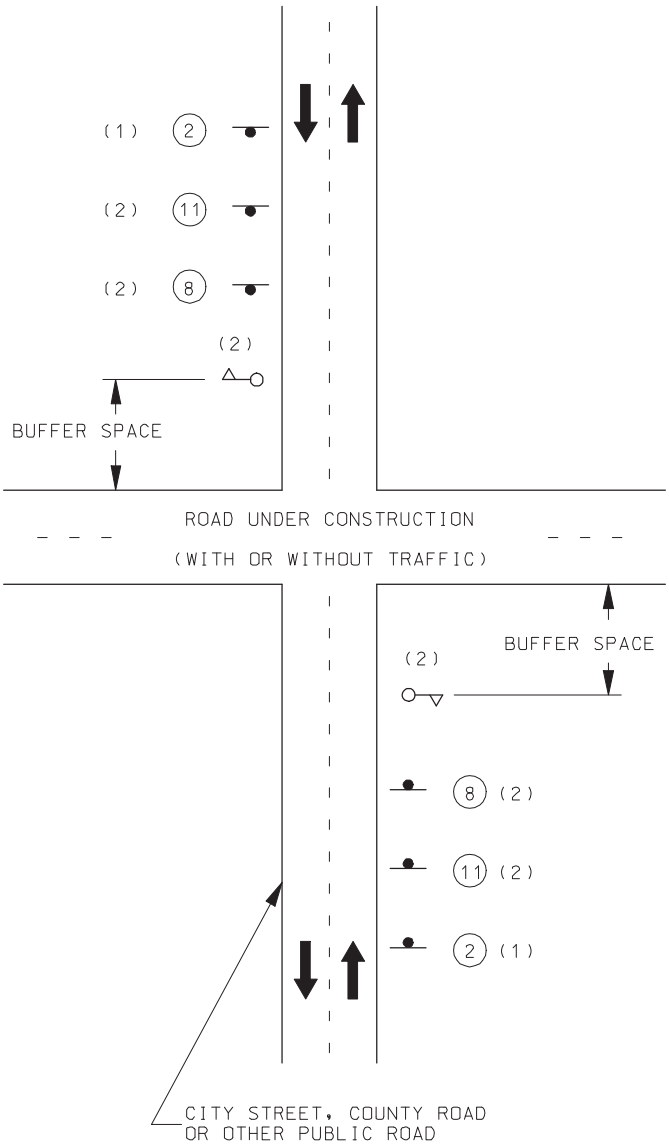

NOTES:

SEE FIGURE 616.1.2 FOR SIGN SPACING.

ADDITIONAL SIGNING MAY BE REQUIRED BASED ON WORK ZONE ACTIVITIES.

(1) SIGN 2 REQUIRED FOR ALL PUBLIC ROAD APPROACHES TO THE WORK ZONE.

(2) FLAGGER AND SIGNING ONLY REQUIRED WHERE EQUIPMENT IS CROSSING THE ROAD OR OTHER CONDITIONS REQUIRING FLAGGER CONTROL EXIST.

Figure 616.0.6

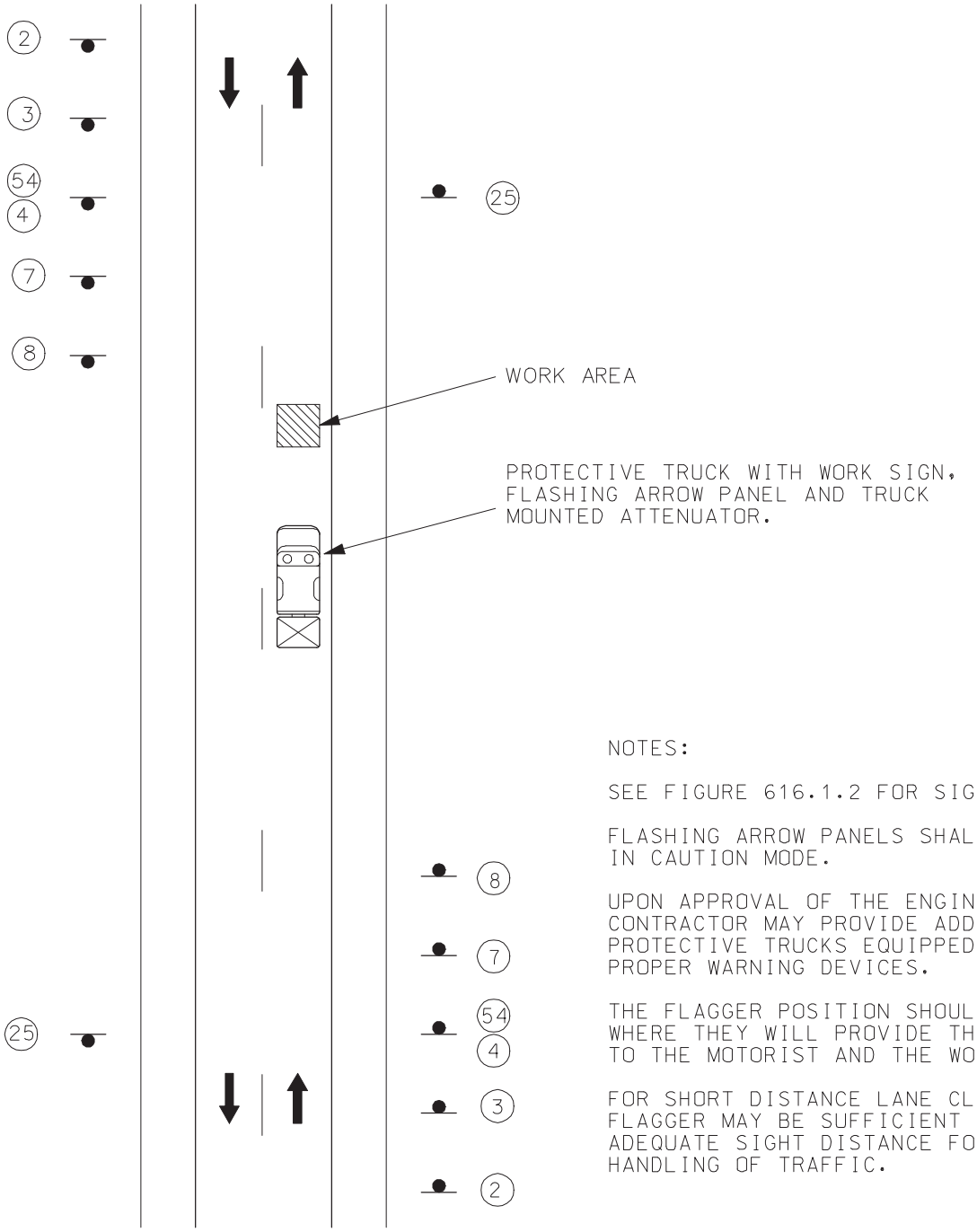

NOTES:

SEE FIGURE 616.1.2 FOR SIGN SPACING.

FLASHING ARROW PANELS SHALL BE OPERATED IN CAUTION MODE.

UPON APPROVAL OF THE ENGINEER, THE CONTRACTOR MAY PROVIDE ADDITIONAL PROTECTIVE TRUCKS EQUIPPED WITH PROPER WARNING DEVICES.

THE FLAGGER POSITION SHOULD BE LOCATED WHERE THEY WILL PROVIDE THE MOST VALUE TO THE MOTORIST AND THE WORK CREW.

FOR SHORT DISTANCE LANE CLOSURES, ONE FLAGGER MAY BE SUFFICIENT IF THERE IS ADEQUATE SIGHT DISTANCE FOR THE PROPER HANDLING OF TRAFFIC.

PW17000TRS

Two-Lane Undivided Highway
Moving Operation On Highway Open To Traffic

Figure 616.0.10

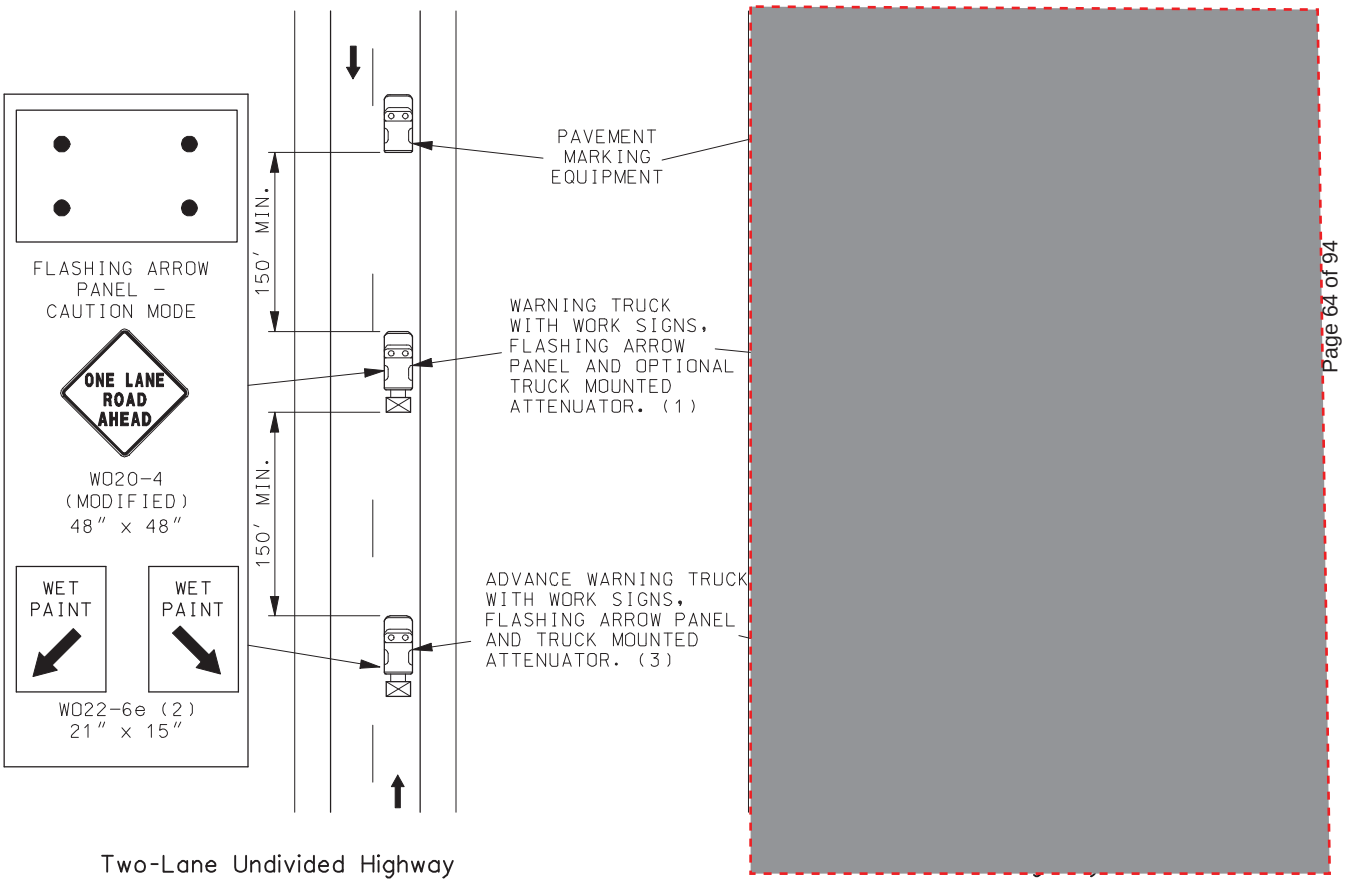

Two-Lane Undivided Highway

NOTES:

ALL SIGNS HAVE TYPE 3 FLUORESCENT ORANGE RETROREFLECTIVE SHEETING.

(1) TRUCK IS OPTIONAL ON TWO-LANE UNDIVIDED HIGHWAYS IF SIGNING AND ARROW BOARD IS MOUNTED ON THE PAVEMENT MARKING EQUIPMENT.

(2) WET PAINT SIGNS ARE INSTALLED TO INDICATE THE SIDE IN WHICH THE PAVEMENT MARKING MATERIAL IS BEING APPLIED. AT THE CONTRACTOR'S OPTION, A FRONT FACING WET PAINT SIGN MAY BE INSTALLED ON THE LEFT SIDE OF THE PAVEMENT MARKING EQUIPMENT.

(3) ADVANCE WARNING TRUCK IS POSITIONED AT THE NO TRACK POINT OF THE PAVEMENT MARKING MATERIAL OR SPACING SHOWN, WHICHEVER IS GREATER.

PW17000TRS

Pavement Marking
Moving Operation On Highway Open To Traffic

Figure 616.0.10

Sign Spacing, Device Spacing and Chanelizing Taper Lengths

TAPER LENGTHS AND SPACING OF CHANNELIZING DEVICES					
SPEED MPH (S)	MINIMUM TAPER LENGTHS (L) FOR LATERAL SHIFTS (W)			MAXIMUM CHANNELIZER SPACING	
	10 FT	11 FT	12 FT	THROUGH TAPER	THROUGH WORK AREA
0-35	205 FT	225 FT	245 FT	35 FT	50 FT
40-45	450 FT	495 FT	540 FT	40 FT	100 FT
50-55	550 FT	605 FT	660 FT	50 FT	100 FT
60-70	700 FT	770 FT	840 FT	60 FT	100 FT

SIGN SPACING FOR ADVANCE SIGN SERIES (1) (2)		
SPEED MPH (S)	NON-DIVIDED HIGHWAYS	DIVIDED HIGHWAYS
0-35	200 FT	200 FT
40-45	350 FT	500 FT
50-55	500 FT	1000 FT
60-70	1000 FT	1000 FT

TAPER LENGTH (L)

$L = W \times S$ FOR 45 MPH OR MORE

$L = \frac{WS^2}{60}$ FOR 40 MPH OR LESS

L = TAPER LENGTH IN FEET

W = LATERAL SHIFT IN FEET

S = POSTED SPEED PRIOR TO ROAD WORK IN MPH

TAPER LENGTHS AND END TREATMENTS FOR CONCRETE BARRIER				
SPEED MPH (S)	MINIMUM TAPER LENGTHS FOR LANE WIDTHS (3)			END TREATMENT (4)
	10 FT	11 FT	12 FT	
<40	160 FT	168 FT	176 FT	BARRIER HEIGHT TRANSITION
≥40	160 FT	168 FT	176 FT	APPROVED CRASH CUSHION

NOTES:

(1) SPACING BETWEEN SIGNS AND SPACING BETWEEN LAST SIGN AND FLAGGER, BEGINNING OF TAPER, OR SIGNED CONDITION.

(2) SPACINGS MAY BE ADJUSTED AS NECESSARY TO MEET FIELD CONDITIONS.

(3) TAPER LENGTHS SHOWN INCLUDE LENGTH REQUIRED FOR LANE AND 10 FT SHOULDER.

(4) CONCRETE BARRIER MAY BE INSTALLED AT AN 8:1 FLARE RATE FROM THE SHOULDER POINT TO THE LIMITS OF THE CLEAR ZONE WHERE THE SIDE SLOPE IS 6:1 OR FLATTER.

Figure 616.1.2

Sign Spacing, Device Spacing and Chanelizing Taper Lengths

TAPER LENGTHS AND SPACING OF CHANNELIZING DEVICES					
SPEED MPH (S)	MINIMUM TAPER LENGTHS (L) FOR LATERAL SHIFTS (W)			MAXIMUM CHANNELIZER SPACING	
	3.05 m	3.35 m	3.66 m	THROUGH TAPER	THROUGH WORK AREA
0-35	63 m	69 m	75 m	10 m	15 m
40-45	138 m	151 m	165 m	12 m	30 m
50-55	168 m	185 m	202 m	15 m	30 m
60-70	214 m	235 m	257 m	18 m	30 m

TAPER LENGTHS AND END TREATMENTS FOR CONCRETE BARRIER				
SPEED MPH (S)	MINIMUM TAPER LENGTHS FOR LANE WIDTHS (3)			END TREATMENT (4)
	3.0 m	3.4 m	3.7 m	
<40	49 m	52 m	54 m	BARRIER HEIGHT TRANSITION
≥40	49 m	52 m	54 m	APPROVED CRASH CUSHION

SIGN SPACING FOR ADVANCE SIGN SERIES (1) (2)		
SPEED MPH (S)	NON-DIVIDED HIGHWAYS	DIVIDED HIGHWAYS
0-35	60 m	60 m
40-45	105 m	150 m
50-55	150 m	300 m
60-70	300 m	300 m

TAPER LENGTH (L)

$L = W \times S$ FOR 45 MPH OR MORE

$L = \frac{WS^2}{60}$ FOR 40 MPH OR LESS

L = TAPER LENGTH IN METERS

W = LATERAL SHIFT IN METERS

S = POSTED SPEED PRIOR TO ROAD WORK IN MPH

NOTES:

(1) SPACING BETWEEN SIGNS AND SPACING BETWEEN LAST SIGN AND FLAGGER, BEGINNING OF TAPER, OR SIGNED CONDITION.

(2) SPACINGS MAY BE ADJUSTED AS NECESSARY TO MEET FIELD CONDITIONS.

(3) TAPER LENGTHS SHOWN INCLUDE LENGTH REQUIRED FOR LANE AND 3.0 m SHOULDER.

(4) CONCRETE BARRIER MAY BE INSTALLED AT AN 8:1 FLARE RATE FROM THE SHOULDER POINT TO THE LIMITS OF THE CLEAR ZONE WHERE THE SIDE SLOPE IS 6:1 OR FLATTER.

Figure 616.1.2

Sheet 2 of 2

Intermediate Lane Closure

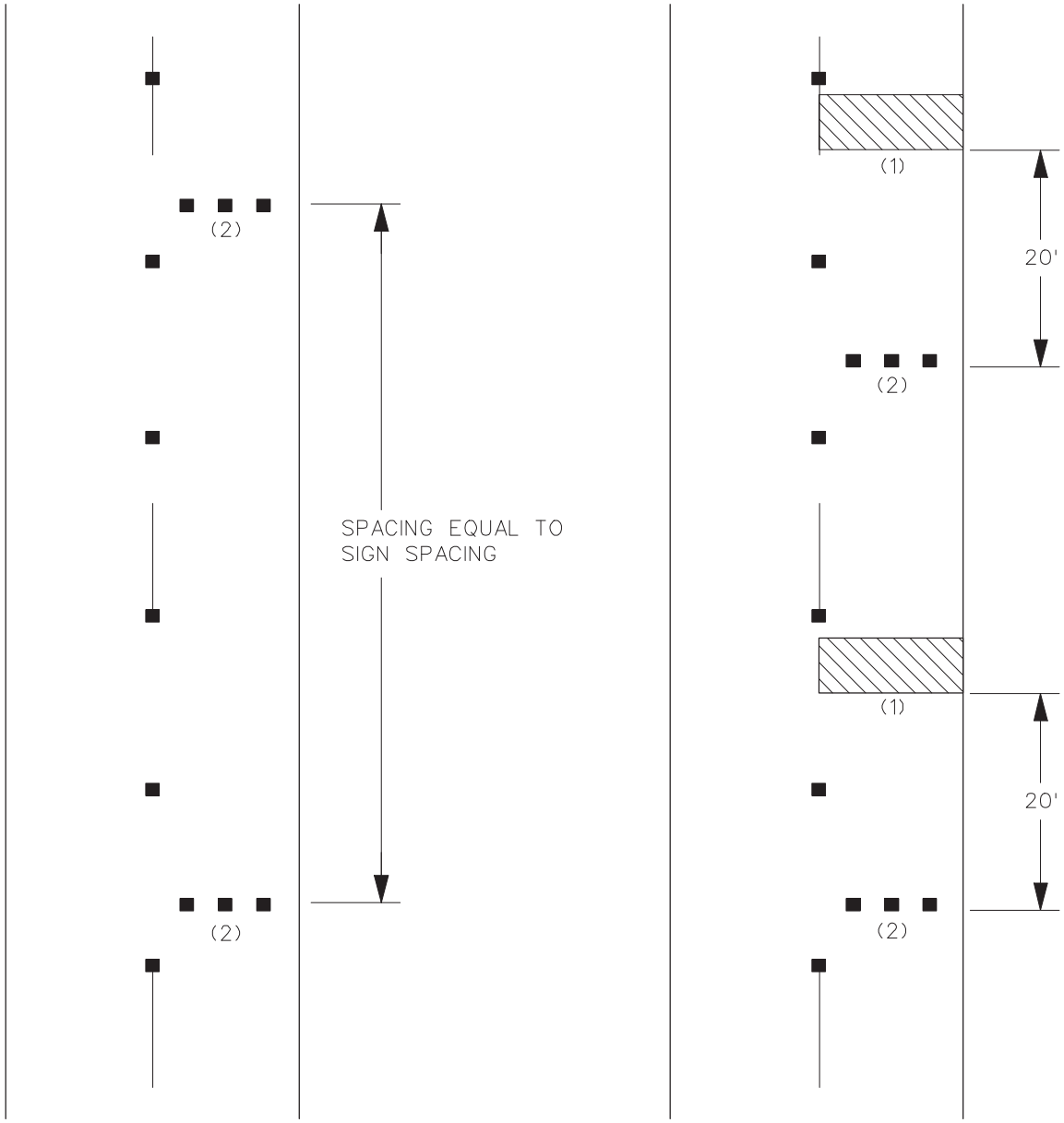

EXTENDED LENGTHS

HAZARDS IN CLOSED LANE

NOTES:
SEE FIGURE 616.1.2 FOR SIGN SPACING AND DEVICE SPACIG.
SPACING MAY BE ADJUSTED ON A CASE-BY-CASE BASIS.
(1) ACTIVE WORK AREAS IN LANE CLOSURE SUCH AS
PAVEMENT REPAIR OR OTHER OPERATION.
(2) BARRICADES MAY BE USED IN LIEU OF CHANNELIZERS.

Figure 616.1.3

Flagger Control for Resurfacing or Moving Operation
One-Lane Two-Way Operation

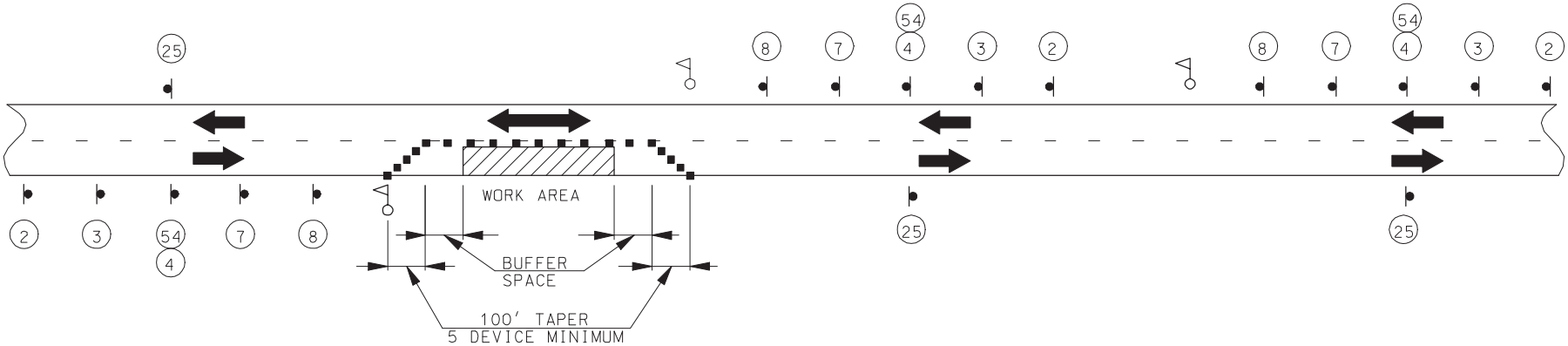

SET 1

SET 2

SET 3

THIS SET OF SIGNS IS PLACED WITH SIGN LEGEND TURNED AWAY FROM BOTH DIRECTIONS OF TRAFFIC UNTIL RESURFACING OPERATIONS APPROACH THE LOCATION OF SIGN SET 2, THEN THE SIGNS ARE POSITIONED TO FACE ONCOMING TRAFFIC.

AFTER SET 3 SIGNS ARE ERECTED, THE SET 2 SIGNS ARE MOVED TO THE OPPOSITE SIDE OF THE ROAD. WHEN THE RESURFACING OPERATION HAS CLEARED THE SET 2 LOCATION THE REQUIRED SIGN SPACING DISTANCES, THE SET 2 SIGNS BECOME SET 1 SIGNS.

WHEN RELOCATED SET 2 SIGNS ARE PLACED IN OPERATION, SET 1 SIGNS ARE MOVED AHEAD OF THE RESURFACING AND BECOME SET 3 SIGNS.

NOTES:

SEE FIGURE 616.1.2 FOR SIGN SPACING AND DEVICE SPACING.

DAYLIGHT FLAGGING OPERATIONS ONLY.

CHANNELIZING DEVICES LOCATED DOWNSTREAM OF THE ONE-LANE, TWO-WAY TAPER ARE OPTIONAL. THESE DEVICES SHOULD BE ELIMINATED WHEN THEIR USE WILL REDUCE THE USABLE LANE WIDTH, INCLUDING ANY ACCEPTABLE SHOULDERS, TO LESS THAN 10' OR WILL SIGNIFICANTLY AFFECT THE RESURFACING OPERATION.

Figure 616.2.6

Flagger Control for Stationary Operation
One-Lane Two-Way Operation

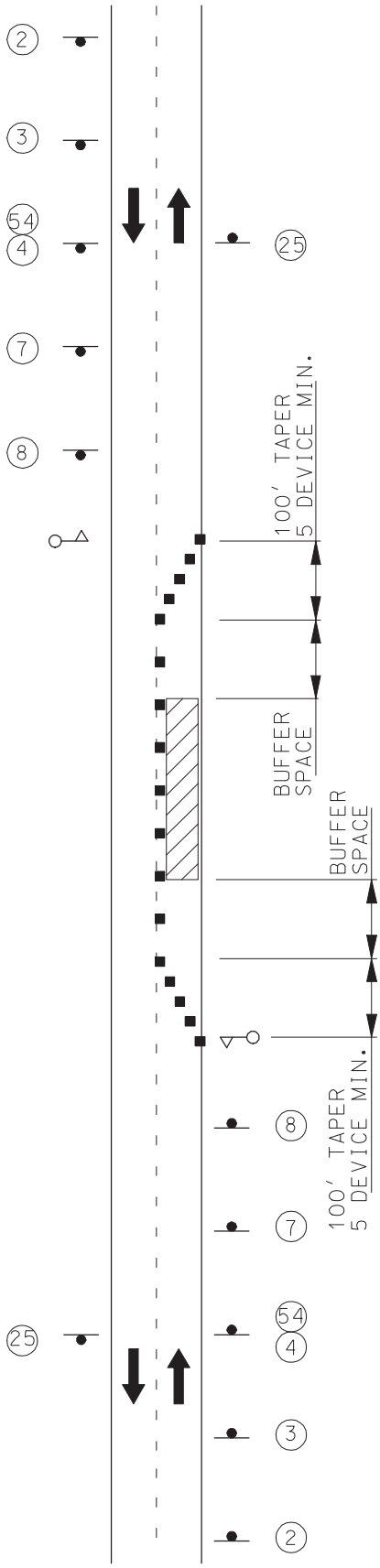

NOTES:

SEE FIGURE 616.1.2 FOR SIGN SPACING AND DEVICE SPACING.

Figure 616.2.6

Sheet 2 of 2

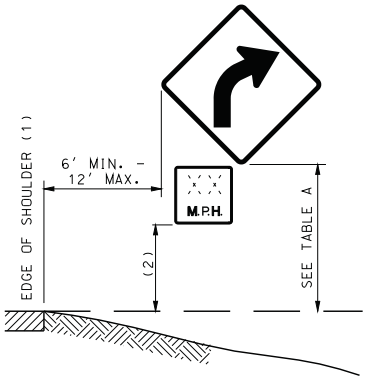

(1) EDGE OF TRAVELED WAY WHERE THERE IS NO PAVED OR STABILIZED SHOULDER.
(2) ONE-FOOT LESS THAN MOUNTING HEIGHT NOTED IN TABLE A.

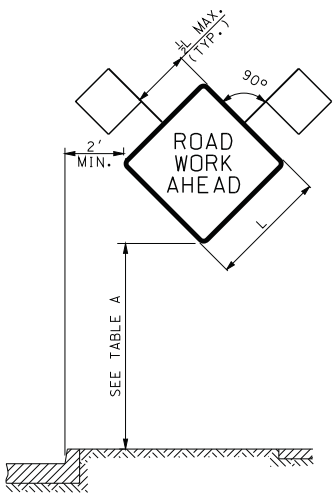

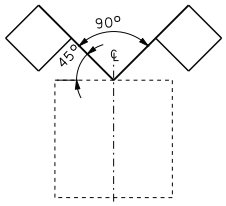

HEIGHT AND LATERAL LOCATIONS FOR POST AND PORTABLE SIGN MOUNTING

TYPE	SIGN SUPPORT	SIGN SUBSTRATE	MINIMUM MOUNTING HEIGHT(3)	USAGE LIMITATIONS	COMMENTS
POST	PERFORATED SQUARE STEEL TUBE U-CHANNEL WOOD	RIGID	5' RURAL UNDIVIDED HIGHWAYS 7' RURAL DIVIDED HIGHWAYS 7' URBAN HIGHWAYS	NONE	POSTS SHALL BE FREE OF ANY BRACING AND EXTEND NO FURTHER ABOVE THE SIGN EXCEPT AS NEEDED FOR WARNING LIGHT ATTACHMENT. SEE STANDARD PLAN 903.03 FOR POST INSTALLATION DETAILS. GALVANIZATION OF POSTS WILL NOT BE REQUIRED.
TYPE 1 PORTABLE	SKID FOLD-UP STAND	RIGID	5' RURAL UNDIVIDED HIGHWAYS 7' RURAL DIVIDED HIGHWAYS 7' URBAN HIGHWAYS	PERMITTED ONLY WHERE POST MOUNTING IS NOT FEASIBLE.	SYSTEMS SHALL COMPLY WITH CRASH TEST REQUIREMENTS OF NCHRP 350 TEST LEVEL 3 AND MAY BE PLACED ADJACENT TO OR WITHIN THE ROADWAY PROVIDED A MINIMUM LATERAL CLEARANCE OF 3 FEET, MEASURED HORIZONTALLY FROM THE EDGE OF THE SIGN TO THE EDGE OF DESIGNATED TRAVELED WAY, IS MAINTAINED.
TYPE 2 PORTABLE	EASEL FOLD-UP STAND SELF-DRIVING POST TYPE III MOVABLE BARRICADE SKID	FLEXIBLE RIGID	12"(4)	PERMITTED ONLY FOR INSTALLATION UP TO 3 DAYS(5). WHERE SIGNS ARE OBSCURED BY OTHER OBJECTS (I.E., TRAFFIC CONTROL DEVICES, PARKED VEHICLES, BARRIER, VEGETATION, ETC.) OR INSTALLED ON MULTI-LANE UNDIVIDED FACILITIES OR MULTI-LANE DIVIDED FACILITIES WITH 3 OR MORE LANES IN ONE DIRECTION, MOUNTING HEIGHTS SHALL BE AS SPECIFIED FOR POST-MOUNTED SIGNS.	SYSTEMS SHALL COMPLY WITH CRASH TEST REQUIREMENTS OF NCHRP 350 TEST LEVEL 3 AND MAY BE PLACE ADJACENT TO OR WITHIN ROADWAY PROVIDED A MINIMUM LATERAL CLEARANCE OF 3 FEET, MEASURED HORIZONTALLY FROM THE EDGE OF THE SIGN TO THE EDGE OF THE DESIGNATED TRAVELED WAY, IS MAINTAINED.
BARRIER	CONCRETE TRAFFIC BARRIER GUARDRAIL	FLEXIBLE RIGID	5' RURAL UNDIVIDED HIGHWAYS 7' RURAL DIVIDED HIGHWAYS 7' URBAN HIGHWAYS	PERMITTED ONLY WHERE LONGITUDINAL BARRIER IS PRESENT.	SYSTEMS SHALL PROVIDE POSITIVE CONNECTION TO THE BARRIER AND MINIMIZE POTENTIAL FOR VEHICLE SNAGGING.
VEHICLE	PAVEMENT MARKING EQUIPMENT PILOT CAR PROTECTIVE VEHICLE	FLEXIBLE RIGID	48" (6)	PERMITTED ONLY IN PILOT CAR OR MOVING OPERATIONS.	

(3) MEASURED FROM THE BOTTOM OF THE SIGN TO THE NEAR EDGE OF THE PAVEMENT.
(4) MOUNTING HEIGHTS FOR REGULATORY AND GUIDE SIGNS SHALL BE AS SPECIFIED FOR POST-MOUNTED SIGNS.
(5) SIGNS MOUNTED ON TYPE III BARRICADES, GORE EXIT SIGN, AND SIGNS FOR CROSWALK/SIDEWALK CLOSURES MAY BE LEFT IN PLACE FOR MORE THAN 3 DAYS.
(6) DEVIATIONS AS APPROVED BY THE ENGINEER.

TABLE A
WORK ZONE SIGN MOUNTING REQUIREMENTS

SIGN AREA (SQ.FT.)	POST TYPE: U-CHANNEL	POST TYPE: WOOD	POST TYPE: PERF. SQUARE STEEL TUBING
≤ 10	1 - 3.0 LB./FT.*	1 - 4" X 4"*	1 - 2" 12 GA.*
> 10 ≤ 16	2 - 3.0 LB./FT.	2 - 4" X 4" 1 - 4" X 6"*	2 - 2" 12 GA.
> 16 ≤ 24	2 - 3.0 LB./FT.	2 - 4" X 6"	3 - 2" 12 GA.**
> 24 ≤ 30	3 - 3.0 LB./FT.	2 - 4" X 6"	N/A
> 30 ≤ 50	N/A	2 - 6" X 6"	N/A

* SIGNS GREATER THAN 4 FEET IN WIDTH, EXCEPT DIAMOND SHAPE SIGNS, REQUIRE TWO POSTS.

** REQUIRES SLIP BASE PER MANUFACTURER'S RECOMMENDATION.

TABLE B
POST SIZE REQUIREMENTS

GENERAL NOTES:

LONGITUDINAL SPACING OF SIGNS SHOWN IN THE PLANS ARE PREFERRED MINIMUMS, BUT MAY BE ADJUSTED TO MEET EXISTING FIELD CONDITIONS WITH APPROVAL FROM THE ENGINEER.

SIGNS SHALL NOT BE MOUNTED IN OR ON CHANNELIZERS.

ALL POSTS AND SIGNS SHALL BE INSTALLED AND MAINTAINED IN A PLUMB POSITION.

CONSTRUCTION SIGNS SHALL NOT BE LOCATED ON SIDEWALKS, BICYCLE LANES, OR AREAS DESIGNATED FOR PEDESTRIAN OR BICYCLE TRAFFIC.

ALL BATTERY PACKS SEPARATE FROM WARNING LIGHT SHALL BE MOUNTED ON A SUPPORT POST NO HIGHER THAN 18" ABOVE GROUND LINE. IF USED, WARNING LIGHTS SHALL NOT COVER ANY PORTION OF THE SIGN FACE.

MISSOURI HIGHWAYS AND TRANSPORTATION COMMISSION
105 WEST CAPITOL
JEFFERSON CITY, MO 65102
1-888-ASK-MODOT (1-888-275-6636)

STATE OF MISSOURI
KATHRYN PHILLIPS HARVEY
NUMBER PE-23751
PROFESSIONAL ENGINEER
THIS SHEET HAS BEEN SIGNED, SEALED AND DATED ELECTRONICALLY.

TEMPORARY TRAFFIC CONTROL DEVICES
SIGN MOUNTING REQUIREMENTS

DATE EFFECTIVE: 02/01/2011
DATE PREPARED: 12/8/2010

616.10AN

SHEET NO. 1 OF 8

IF A SEAL IS PRESENT ON THIS SHEET IT HAS BEEN ELECTRONICALLY SEALED AND DATED.

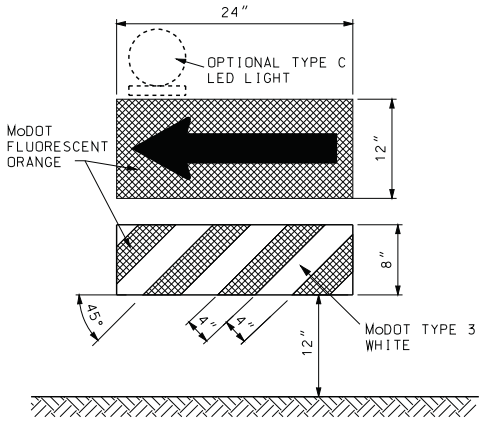

DIRECTION INDICATOR BARRICADE

VERTICAL DIMENSIONS DO NOT INCLUDE PROJECTIONS DESIGNED FOR EASE OF HANDLING.

DIRECTION INDICATOR BARRICADES SHALL NOT BE USED IN SHIFTING TAPERS UNLESS SHOWN ON THE PLANS.

THE PANELS SHALL BE SECURELY ATTACHED TO A SUPPORT THAT IS PORTABLE, CAPABLE OF REMAINING UPRIGHT AND ENTIRELY FREE STANDING.

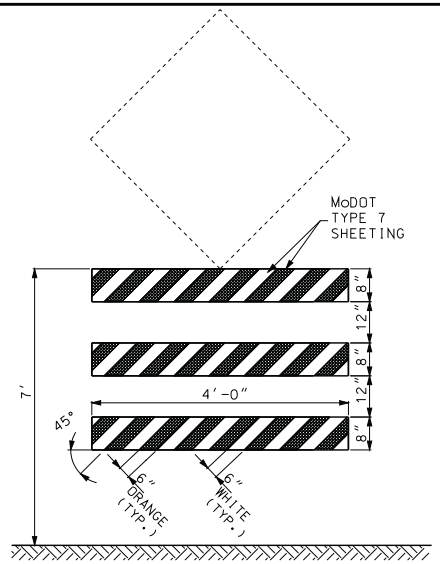

ADVANCE WARNING RAIL SYSTEM

MAXIMUM WEIGHT OF SIGN SHALL NOT EXCEED 25 LBS.

THE SIGN AND RAIL SYSTEM MAY BE MOUNTED AS TWO SEPARATE CRASHWORTHY DEVICES. THE RAIL SYSTEM SHALL BE LOCATED DIRECTLY IN FRONT OF THE SIGN WITH 7 TO 10 FEET SEPARATING THE TWO DEVICES.

WHERE MARKING IS NOT PROVIDED ON THE BACKSIDE, STRIPS OF 3" WIDE MODOT TYPE 7 ORANGE SHEETING MAY BE APPLIED TO THE ENDS OF EACH RAIL TO HELP DELINEATE THE DEVICE.

GENERAL NOTES:

BALLAST FOR TRAFFIC CONTROL DEVICES SHALL CONFORM TO MANUFACTURERS' RECOMMENDATION FOR FIELD CONDITIONS WHEN APPLICABLE.

IF REQUIRED BY THE ENGINEER OR SPECIFIED ON THE PLANS, EACH DIRECTION INDICATOR BARRICADE, DRUMLIKE CHANNELIZER, AND VERTICAL PANEL SHALL BE EQUIPPED WITH ONE TYPE C LED PORTABLE LIGHT UNIT. IF USED, THE LIGHT UNIT AND BATTERY COMPARTMENT SHALL BE FURNISHED BY THE DEVICE MANUFACTURER OR OTHERWISE MEET THE MANUFACTURER'S RECOMMENDATIONS FOR DESIGN AND WILL BE REQUIRED ON ALL DEVICES IN THE SERIES.

UPON APPROVAL OF THE ENGINEER, THE CONTRACTOR MAY, AT NO ADDITIONAL COST, USE DRUM-LIKE CHANNELIZERS IN LIEU OF TRIM-LINE CHANNELIZERS TO PROVIDE LONGITUDINAL CHANNELIZATION WITHIN THE ACTIVITY AREA WHERE NO RAMPS, INTERSECTIONS OR LIMITED LATERAL CLEARANCE EXISTS.

UPON APPROVAL OF THE ENGINEER, THE CONTRACTOR MAY, AT NO ADDITIONAL COST, USE DIRECTION INDICATOR BARRICADES IN LIEU OF TRIM-LINE CHANNELIZERS IN MERGING TAPERS.

UPON APPROVAL OF THE ENGINEER, THE CONTRACTOR MAY, AT NO ADDITIONAL COST, USE VERTICAL PANELS IN LIEU OF TRIM-LINE CHANNELIZERS TO PROVIDE LONGITUDINAL CHANNELIZATION WITHIN THE ACTIVITY AREA.

UPON APPROVAL OF THE ENGINEER, THE CONTRACTOR MAY, AT NO ADDITIONAL COST, USE CONES IN LIEU OF TRIM-LINE CHANNELIZERS DURING DAYTIME OPERATIONS ON MINOR ROUTES.

PANEL AND RAIL MARKINGS FOR TRAFFIC DELINEATION SHALL SLOPE DOWNWARD TOWARD THE INTENDED DIRECTION OF TRAVEL. ILLUSTRATIONS SHOWN ARE FOR INSTANCES WHERE TRAFFIC MOVES TO THE LEFT. REVERSE CONFIGURATIONS SHALL BE USED FOR TRAFFIC MOVEMENTS TO THE RIGHT. MARKINGS SHALL ONLY BE APPLIED TO THE FRONT OF EACH RAIL OR PANEL, OR MAY BE APPLIED TO BOTH THE FRONT AND BACK PROVIDING THE MARKING ON THE BACK DOES NOT CONFLICT WITH INTENDED OPPOSING TRAFFIC MOVEMENT.

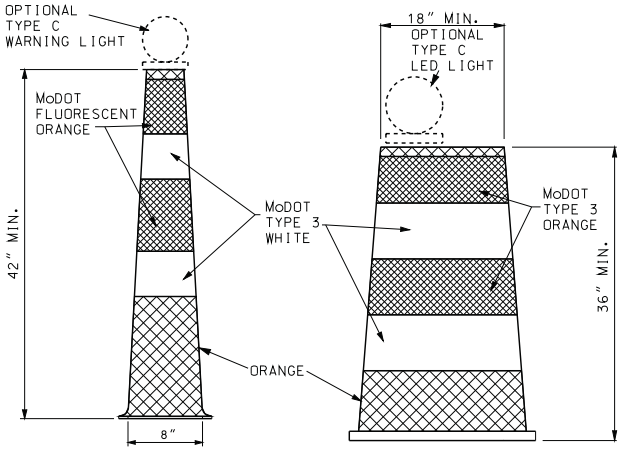

TRIM-LINE DRUM-LIKE

CHANNELIZERS

STRIPES ON TRIM-LINE CHANNELIZERS SHALL BE 6" TO 8".
STRIPES ON DRUM-LIKE CHANNELIZERS SHALL BE 4" TO 6".

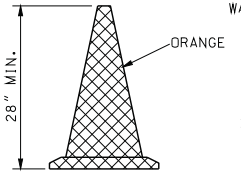

CONE

CONES SHALL MAINTAIN THEIR SHAPE UPON EXPOSURE TO NORMAL WORK CONDITIONS.

CONES SHALL BE USED DURING DAYLIGHT HOURS ONLY.

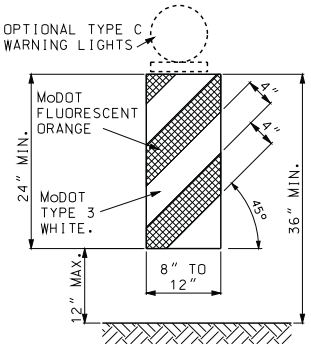

VERTICAL PANEL

VERTICAL PANELS SHALL BE SECURELY ATTACHED TO A SUPPORT THAT IS PORTABLE, CAPABLE OF REMAINING UPRIGHT AND ENTIRELY FREE STANDING.

MISSOURI HIGHWAYS AND TRANSPORTATION COMMISSION
105 WEST CAPITOL
JEFFERSON CITY, MO 65102
1-888-ASK-MODOT (1-888-275-6636)

STATE OF MISSOURI
KATHRYN PHILLIPS HARVEY
NUMBER PE-23751
PROFESSIONAL ENGINEER
THIS SHEET HAS BEEN SIGNED, SEALED AND DATED ELECTRONICALLY.

TEMPORARY TRAFFIC CONTROL DEVICES

CHANNELIZERS AND DIRECTION INDICATOR BARRICADE

DATE EFFECTIVE: 02/01/2011	616.10AN	SHEET NO.	
DATE PREPARED: 12/8/2010		2 OF 8	

IF A SEAL IS PRESENT ON THIS SHEET IT HAS BEEN ELECTRONICALLY SEALED AND DATED.

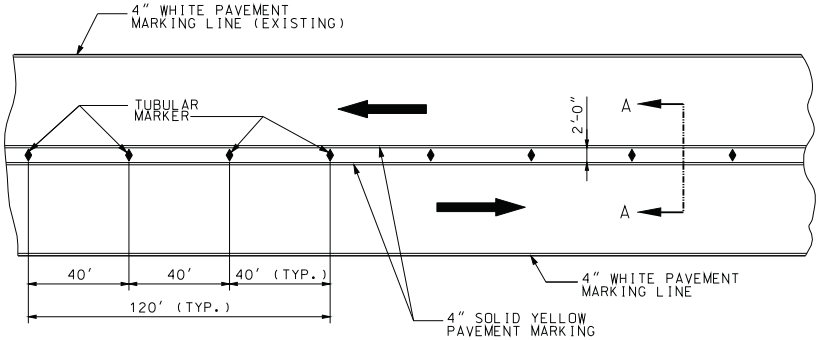

TWO LANE / TWO WAY TRAFFIC DELINEATION PLAN FOR DIVIDED HIGHWAY

IF RAISED PAVEMENT MARKERS ARE PRESENT, THE LENSES SHALL BE REMOVED OR COVERED TO THE SATISFACTION OF THE ENGINEER.

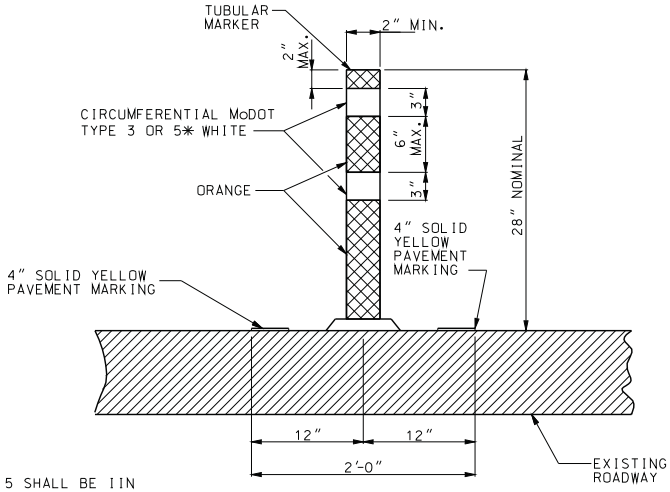

* TYPE 5 SHALL BE IIN ACCORDANCE WITH ASTM D4956.

SECTION A-A

TUBULAR MARKER DETAIL

AN ADHESIVE, IN ACCORDANCE WITH THE MANUFACTURER'S RECOMMENDATIONS, SHALL BE USED TO APPLY THE TUBULAR MARKER TO THE ROADWAY SURFACE. THE ADHESIVE SHALL PERMIT EASY REMOVAL OF THE TUBULAR MARKER WITHOUT DAMAGE TO THE ROADWAY SURFACE.

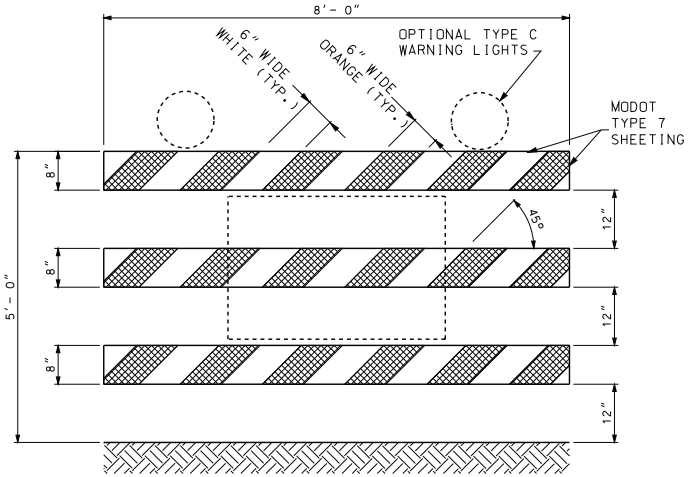

ONE TYPE III MOVABLE BARRICADE WILL BE REQUIRED TO COMPLETELY CLOSE EACH 8' OF PAVEMENT. PAVED SHOULDERS SHALL BE INCLUDED IN THE AREA TO BE CLOSED.

SIGNS SHALL BE LIGHT WEIGHT (ROLL-UP OR PLASTIC) AND OBSCURE NO MORE THAN 50 PERCENT OF THE TOP 2 RAILS OR 33 PERCENT OF ALL THREE RAILS. SEE SIGN MOUNTING REQUIREMENTS IN TABLE A ON SHEET 1.

TYPE C WARNING LIGHTS SHALL BE LIGHT WEIGHT (3.3 LBS. OR LESS) OR HAVE BATTERY PACK MOUNTED NO HIGHER THAN 18-INCH AND SHALL NOT COVER ANY PORTION OF THE BARRICADED FACE.

IF SIGNS OR LIGHTS CANNOT MEET THE ABOVE REQUIREMENTS, THEY SHALL BE MOUNTED ON SEPARATE CRASHWORTHY DEVICES, LOCATED 7 TO 10 FEET BEHIND THE BARRICADE.

WHERE A BARRICADE ARRAY EXTENDS ACROSS A ROADWAY, THE STRIPES SHALL SLOPE DOWNWARD IN THE DIRECTION TOWARD WHICH TRAFFIC MUST TURN OR PASS.

WHERE BOTH RIGHT AND LEFT VEHICULAR MOVEMENTS ARE PROVIDED, THE STRIPES SHALL SLOPE DOWNWARD IN BOTH DIRECTIONS FROM THE CENTER OF THE BARRICADE ARRAY.

WHERE NO VEHICULAR MOVEMENTS ARE PROVIDED, THE STRIPES SHALL SLOPE DOWNWARD TOWARD THE CENTER OF THE BARRICADE ARRAY.

TYPE III MOVABLE BARRICADES SHALL BE ENTIRELY FREE STANDING AND PORTABLE. MARKING SHALL ONLY BE APPLIED TO THE FRONT OF EACH RAIL OR MAY BE APPLIED TO BOTH THE FRONT AND THE BACK OF EACH RAIL PROVIDED THE MARKING ON THE BACK DOES NOT CONFLICT WITH INTENDED OPPOSING TRAFFIC MOVEMENT. WHERE MARKING IS NOT PROVIDED ON THE BACKSIDE, STRIPS OF 3" WIDE MoDOT TYPE 7 ORANGE SHEETING MAY BE APPLIED TO THE ENDS OF EACH RAIL TO HELP DELINEATE THE DEVICE.

TYPE III MOVABLE BARRICADE

MISSOURI HIGHWAYS AND TRANSPORTATION COMMISSION
105 WEST CAPITOL
JEFFERSON CITY, MO 65102
1-888-ASK-MODOT (1-888-275-6636)

STATE OF MISSOURI
KATHRYN PHILLIPS HARVEY
NUMBER PE-23751
PROFESSIONAL ENGINEER
THIS SHEET HAS BEEN SIGNED, SEALED AND DATED ELECTRONICALLY.

TEMPORARY TRAFFIC CONTROL DEVICES

DATE EFFECTIVE: 02/01/2011	616.10AN	SHEET NO.
DATE PREPARED: 3/9/2011		3 OF 8

IF A SEAL IS PRESENT ON THIS SHEET IT HAS BEEN ELECTRONICALLY SEALED AND DATED.

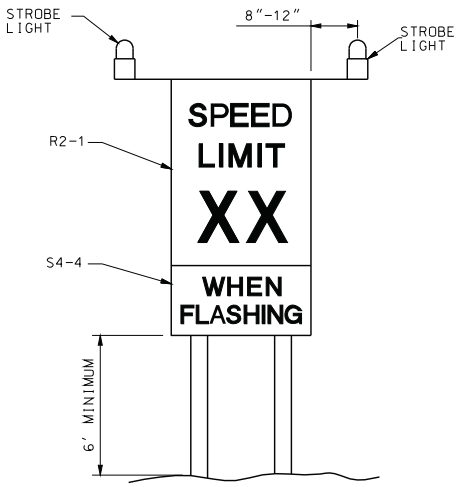

SEE NON-PORTABLE SIGN MOUNTING FOR LATERAL DIMENSIONS

SPEED LIMIT AND STROBE LIGHT ASSEMBLY

THE ASSEMBLY MAY BE EITHER POST- OR PORTABLE-MOUNTED.

THE ASSEMBLY SHALL ONLY BE USED AS SPECIFIED ON THE PLANS OR AS DIRECTED BY THE ENGINEER.

THE ASSEMBLY SHALL BE COVERED OR ROTATED SO THE SIGNS ARE NOT VISIBLE TO TRAFFIC WHEN WORK IS SUSPENDED OR THE CONDITION REQUIRING THE SPEED REDUCTION IS NOT PRESENT FOR 48 HOURS OR MORE.

THE STROBE LIGHTS SHALL BE TURNED OFF WHEN THE SPEED LIMIT IS NOT IN EFFECT.

STROBE LIGHT REQUIREMENTS

STROBE LIGHTS SHALL BE SHIELDED SO THEY WILL NOT BE DIRECTLY VISIBLE FROM THE REAR. NO DIRECT PAYMENT WILL BE MADE FOR THE BATTERIES REQUIRED TO POWER THE STROBE LIGHTS.

AT THE CONTRACTOR'S OPTION, THE STROBE LIGHTS MAY BE CONTROLLED BY A SWITCH LOCATED ON THE SIGN OR MAY BE A STANDARD TWO-CHANNEL DIGITAL TRANSMITTER AND RECEIVER UNIT. IF THE TRANSMITTER AND RECEIVER METHOD IS USED, ONE TRANSMITTER SHALL BE FURNISHED TO THE ENGINEER AT THE TIME OF INSTALLATION OF THE SPEED LIMIT ASSEMBLY. THE TRANSMITTER WILL BE RETURNED TO THE CONTRACTOR AT THE COMPLETION OF THE PROJECT. THE TRANSMITTER AND RECEIVERS WILL REMAIN THE PROPERTY OF THE CONTRACTOR AFTER THE PROJECT IS COMPLETED. NO DIRECT PAYMENT WILL BE MADE FOR THE COST OF THE TRANSMITTER AND RECEIVER.

PORTABLE WARNING LIGHTS

	TYPE A LOW INTENSITY	TYPE B HIGH INTENSITY	TYPE C STEADY BURN
LENS DIRECTIONAL FACES	1 OR 2	1	1 OR 2
FLASHING RATE PER MINUTE	55 TO 75	55 TO 75	CONSTANT
MINIMUM ON-TIME(1)	10%	8%	CONSTANT
HOURS OF OPERATION	DUSK TO DAWN	24 HRS/DAY	DUSK TO DAWN

TYPE A AND C LIGHTS SHALL BE VISIBLE ON A CLEAR NIGHT FROM A DISTANCE OF 3000 FEET(2).

TYPE B LIGHTS SHALL BE VISIBLE ON A SUNNY DAY WHEN VIEWED WITHOUT THE SUN DIRECTLY ON OR BEHIND THE DEVICE FROM A DISTANCE OF 1000 FEET(2).

(1) LENGTH OF TIME THAT INSTANTANEOUS INTENSITY IS EQUAL TO OR GREATER THAN EFFECTIVE INTENSITY.

(2) THIS VISIBILITY MUST BE MAINTAINED WITHIN A SOLID ANGLE 9° ON EACH SIDE OF THE VERTICAL AXIS, AND 5° ABOVE AND 5° BELOW THE HORIZONTAL AXIS.

PORTABLE WARNING LIGHTS SHALL BE BATTERY- OR SOLAR-POWERED.

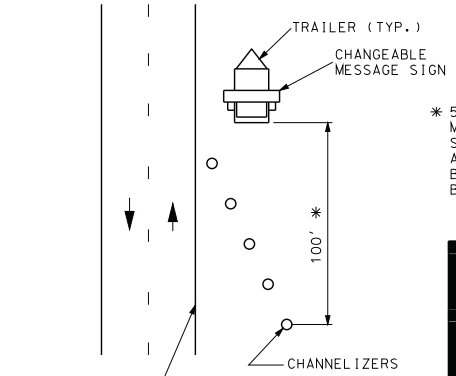

* 5 CHANNELIZERS AT 20' INTERVALS. CHANNELIZERS MAY BE OMITTED WHERE THE CHANGEABLE MESSAGE SIGN IS LOCATED 15' OR MORE FROM THE EDGE OF ANY SHOULDER (EDGE OF ROADWAY WHOULD THERE BE NO SHOULDER), BEYOND THE DITCH LINE, OR BEHIND A CURB OR PHYSICAL BARRIER.

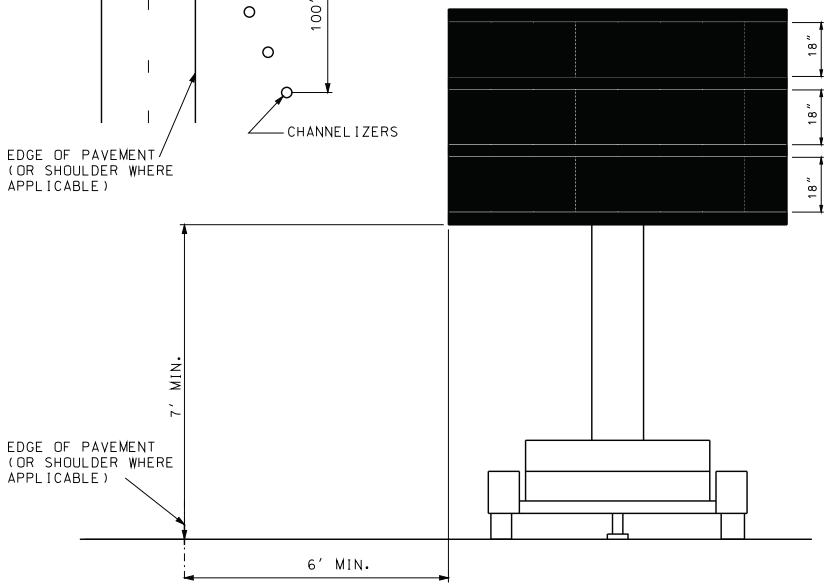

CHANGEABLE MESSAGE SIGN

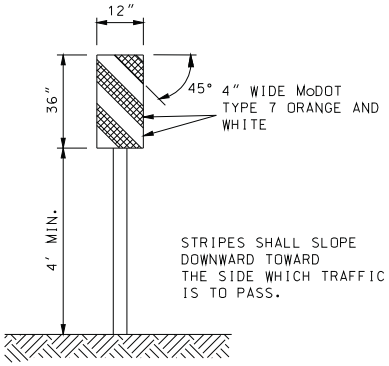

TYPE 3 OBJECT MARKERS

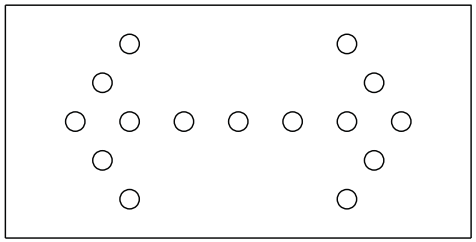

FLASHING ARROW PANEL REQUIREMENTS

PANEL MOUNTING HEIGHT SHALL BE AT LEAST 7 FEET FROM THE ROADWAY SURFACE TO THE LOWEST POINT ON THE PANEL. THE BOTTOM OF THE PANEL SHALL BE RELATIVELY LEVEL WHEN IN USE.

MISSOURI HIGHWAYS AND TRANSPORTATION COMMISSION
105 WEST CAPITOL
JEFFERSON CITY, MO 65102
1-888-ASK-MODOT (1-888-275-6636)

STATE OF MISSOURI
KATHRYN PHILLIPS HARVEY
NUMBER PE-23751
PROFESSIONAL ENGINEER
THIS SHEET HAS BEEN SIGNED, SEALED AND DATED ELECTRONICALLY.

TEMPORARY TRAFFIC CONTROL DEVICES

DATE EFFECTIVE: 02/01/2011
DATE PREPARED: 12/8/2010

616.10AN

SHEET NO. 4 OF 8

IF A SEAL IS PRESENT ON THIS SHEET IT HAS BEEN ELECTRONICALLY SEALED AND DATED.

WARNING SIGNS

SIGN	SIZE (IN.)	AREA (SQ. FT.)	COLOR SYM. LEG. BRD.	COLOR BACK GROUND	SHEETING	DESCRIPTION	
SPECIAL	36X36	9.00	BK	OR	MoDOT FL. OR	FRESH OIL/LOOSE GRAVEL	(3)
E05-2	48X36	12.00	BK	OR	MoDOT FL. OR	EXIT OPEN	
E05-2a	48X36	12.00	BK	OR	MoDOT FL. OR	EXIT CLOSED	
W01-1L	48X48	16.00	BK	OR	MoDOT FL. OR	TURN (SYMBOL LEFT ARROW)	
W01-1R	48X48	16.00	BK	OR	MoDOT FL. OR	TURN (SYMBOL RIGHT ARROW)	
W01-2L	48X48	16.00	BK	OR	MoDOT FL. OR	CURVE (SYMBOL LEFT ARROW)	
W01-2R	48X48	16.00	BK	OR	MoDOT FL. OR	CURVE (SYMBOL RIGHT ARROW)	
W01-3L	48X48	16.00	BK	OR	MoDOT FL. OR	REVERSE TURN (SYMBOL LEFT ARROW)	
W01-3R	48X48	16.00	BK	OR	MoDOT FL. OR	REVERSE TURN (SYMBOL RIGHT ARROW)	
W01-4L	48X48	16.00	BK	OR	MoDOT FL. OR	REVERSE CURVE (SYMBOL LEFT ARROW)	
W01-4R	48X48	16.00	BK	OR	MoDOT FL. OR	REVERSE CURVE (SYMBOL RIGHT ARROW)	
W01-4bL	48X48	16.00	BK	OR	MoDOT FL. OR	DOUBLE ARROW REVERSE CURVE (SYMBOL LEFT ARROWS)	(2)
W01-4bR	48X48	16.00	BK	OR	MoDOT FL. OR	DOUBLE ARROW REVERSE CURVE (SYMBOL RIGHT ARROWS)	(2)
W01-4cL	48X48	16.00	BK	OR	MoDOT FL. OR	TRIPLE ARROW REVERSE CURVE (SYMBOL LEFT ARROWS)	(2)
W01-4cR	48X48	16.00	BK	OR	MoDOT FL. OR	TRIPLE ARROW REVERSE CURVE (SYMBOL RIGHT ARROWS)	(2)
W01-6	48X24	8.00	BK	OR	MoDOT FL. OR	HORIZONTAL ARROW (SYMBOL)	
W01-6a	72X36	18.00	BK	OR	MoDOT FL. OR	HORIZONTAL ARROW (SYMBOL ON PERMANENT BARRICADE)	(1)
W01-7	48X24	8.00	BK	OR	MoDOT FL. OR	DOUBLE HEAD HORIZONTAL ARROW (SYMBOL)	
W01-7a	72X36	18.00	BK	OR	MoDOT FL. OR	DOUBLE HEAD HORIZONTAL ARROW (SYMBOL ON PERMANENT BARRICADE)	(1)
W01-8	18X24	3.00	BK	OR	MoDOT FL. OR	CHEVRON (SYMBOL)	
W01-8a	36X48	12.00	BK	OR	MoDOT FL. OR	CHEVRON (SYMBOL FOR DIVIDED HIGHWAYS)	
W03-1a	48X48	16.00	BK	OR	MoDOT FL. OR	STOP AHEAD (SYMBOL)	
W03-2a	48X48	16.00	BK	OR	MoDOT FL. OR	YIELD AHEAD (SYMBOL)	
W03-3	48X48	16.00	BK	OR	MoDOT FL. OR	SIGNAL AHEAD (SYMBOL)	
W03-4	48X48	16.00	BK	OR	MoDOT FL. OR	BE PREPARED TO STOP	
W03-5	48X48	16.00	BK	OR	MoDOT FL. OR	SPEED LIMIT XX AHEAD (SYMBOL)	
W04-1L	48X48	16.00	BK	OR	MoDOT FL. OR	MERGE (SYMBOL FROM LEFT)	
W04-1R	48X48	16.00	BK	OR	MoDOT FL. OR	MERGE (SYMBOL FROM RIGHT)	
W05-1	48X48	16.00	BK	OR	MoDOT FL. OR	ROAD/BRIDGE/RAMP NARROWS	(4)
W05-3	48X48	16.00	BK	OR	MoDOT FL. OR	ONE LANE BRIDGE	
W05-5	48X48	16.00	BK	OR	MoDOT FL. OR	NARROW LANES	(3)
W06-1	48X48	16.00	BK	OR	MoDOT FL. OR	DIVIDED HIGHWAY (SYMBOL)	
W06-2	48X48	16.00	BK	OR	MoDOT FL. OR	DIVIDED HIGHWAY END (SYMBOL)	
W06-3	48X48	16.00	BK	OR	MoDOT FL. OR	TWO WAY TRAFFIC (SYMBOL)	
W07-3a	30X24	5.00	BK	OR	MoDOT FL. OR	NEXT XX MILES (PLAQUE)	
W08-1	48X48	16.00	BK	OR	MoDOT FL. OR	BUMP	
W08-2	48X48	16.00	BK	OR	MoDOT FL. OR	DIP	
W08-3	48X48	16.00	BK	OR	MoDOT FL. OR	PAVEMENT ENDS	
W08-4	48X48	16.00	BK	OR	MoDOT FL. OR	SOFT SHOULDER	
W08-5	48X48	16.00	BK	OR	MoDOT FL. OR	SLIPPERY WHEN WET (SYMBOL)	
W08-6	48X48	16.00	BK	OR	MoDOT FL. OR	TRUCK CROSSING WITH FLAGS	
W08-6c	48X48	16.00	BK	OR	MoDOT FL. OR	TRUCK ENTRANCE	(3)
W08-7	36X36	9.00	BK	OR	MoDOT FL. OR	LOOSE GRAVEL	
W08-9	48X48	16.00	BK	OR	MoDOT FL. OR	LOW SHOULDER	
W08-9a	48X48	16.00	BK	OR	MoDOT FL. OR	SHOULDER DROP-OFF	
W08-11	48X48	16.00	BK	OR	MoDOT FL. OR	UNEVEN LANES	
W08-12	36X36	9.00	BK	OR	MoDOT FL. OR	NO CENTER STRIPE	
W10-1	42 RND.	9.62	BK	YL	MoDOT TYPE 3	RAILROAD CROSSING	
W012-1	24X24	4.00	BK	OR	MoDOT FL. OR	DOUBLE DOWN ARROW (SYMBOL)	
W012-2	48X48	16.00	BK	OR	MoDOT FL. OR	LOW CLEARANCE (SYMBOL)	
W012-2x	24X18	3.00	BK	OR	MoDOT FL. OR	LOW CLEARANCE (PLAQUE)	(3)
W012-3a,b	144X24	24.00	BK	OR	MoDOT FL. OR	OVERHEAD LOW CLEARANCE (FEET AND INCHES)	(3)
SPECIAL	120X60	50.00	BK	OR	MoDOT FL. OR	LOW CLEARANCE XX FT XX IN XX MILES AHEAD	(3)
SPECIAL	120X60	50.00	BK	OR	MoDOT FL. OR	WIDTH RESTRICTION XX FT XX IN XX MILES AHEAD	(3)
W013-1	30X30	6.25	BK	OR	MoDOT FL. OR	ADVISORY SPEED (PLAQUE)	
W016-2	30X24	5.00	BK	OR	MoDOT FL. OR	XXX FEET (PLAQUE)	
W016-3	30X24	5.00	BK	OR	MoDOT FL. OR	X MILE (PLAQUE)	
W020-1	48X48	16.00	BK	OR	MoDOT FL. OR	ROAD/BRIDGE/RAMP WORK AHEAD	(4)
W020-2	48X48	16.00	BK	OR	MoDOT FL. OR	DETOUR AHEAD	
W020-3	48X48	16.00	BK	OR	MoDOT FL. OR	ROAD CLOSED AHEAD	
W020-4	48X48	16.00	BK	OR	MoDOT FL. OR	ONE LANE ROAD AHEAD	
W020-5	48X48	16.00	BK	OR	MoDOT FL. OR	RIGHT/CENTER/LEFT LANE CLOSED AHEAD	(4)

(1) SIGN DEPICTION, ARROW, BORDERS AND SPACING SHALL BE IN ACCORDANCE WITH THE LATEST EDITION OF "STANDARD HIGHWAY SIGNS" BY THE U.S. DEPARTMENT OF TRANSPORTATION - FHWA.

(2) REFER TO THE LATEST EDITION OF MUTCD PART VI BY THE U.S. DEPARTMENT OF TRANSPORTATION - FHWA FOR SIGN DEPICTION. ARROW, BORDERS AND SPACING SHALL CONFORM TO THE GUIDELINES SET FORTH IN THE LATEST EDITION OF "STANDARD HIGHWAY SIGNS" BY THE U.S. DEPARTMENT OF TRANSPORTATION - FHWA.

(3) ARROW, BORDERS AND SPACING SHALL BE IN ACCORDANCE WITH THE LATEST EDITION OF "STANDARD HIGHWAY SIGNS" BY THE U.S. DEPARTMENT OF TRANSPORTATION - FHWA.

(4) USE OF A SUPPLEMENTAL PLATE FOR LINE 1 IS ACCEPTABLE.

(5) PLAQUE AND APPLICABLE REGULATORY SIGN MAY BE MANUFACTURED AS ONE SIGN.

GENERAL NOTES:

SIGN LAYOUTS SHALL BE IN ACCORDANCE WITH THE LATEST EDITION OF "STANDARD HIGHWAY SIGNS" BY THE U.S. DEPARTMENT OF TRANSPORTATION - FHWA, UNLESS SPECIFIED OTHERWISE.

SIGN DIMENSIONS SHOWN ARE MINIMUM. NO ADDITIONAL PAYMENT WILL BE MADE IF CONTRACTORS USE LARGER SIGNS.

NO ADDITIONAL PAYMENT WILL BE MADE FOR PLATES.

GENERAL NOTES:
ALL PLAQUES SHALL HAVE A BORDER. PLATES SHALL NOT HAVE A BORDER.

MISSOURI HIGHWAYS AND TRANSPORTATION COMMISSION
105 WEST CAPITOL
JEFFERSON CITY, MO 65102
1-888-ASK-MODOT (1-888-275-6636)

STATE OF MISSOURI
KATHRYN PHILLIPS HARVEY
NUMBER PE-23751
PROFESSIONAL ENGINEER
THIS SHEET HAS BEEN SIGNED, SEALED AND DATED ELECTRONICALLY.

TEMPORARY TRAFFIC CONTROL DEVICES

WARNING SIGNS

DATE EFFECTIVE: 02/01/2011
DATE PREPARED: 12/8/2010

616.10AN

SHEET NO. 5 OF 8

IF A SEAL IS PRESENT ON THIS SHEET IT HAS BEEN ELECTRONICALLY SEALED AND DATED.

SIGN	SIZE (IN.)	AREA (SQ. FT.)	COLOR SYM. LEG. BRD.	COLOR BACK GROUND	SHEETING	DESCRIPTION	
WARNING SIGNS							
W020-5a	48X48	16.00	BK	OR	MoDOT FL. OR	RIGHT/CENTER/LEFT TWO LANES CLOSED AHEAD	(4)
W020-6a	48X48	16.00	BK	OR	MoDOT FL. OR	RIGHT/CENTER/LEFT LANE CLOSED	(3)(4)
W020-7a	48X48	16.00	BK	OR	MoDOT FL. OR	FLAGGER (SYMBOL) WITH FLAGS	
W021-2	36X36	9.00	BK	OR	MoDOT FL. OR	FRESH OIL	
W021-5b	48X48	16.00	BK	OR	MoDOT FL. OR	SHOULDER WORK AHEAD	(3)
W022-1	48X48	16.00	BK	OR	MoDOT FL. OR	BLASTING ZONE AHEAD	
W022-2	42X36	10.50	BK	OR	MoDOT FL. OR	TURN OFF 2-WAY RADIO AND PHONE	
W022-3	42X36	10.50	BK	OR	MoDOT FL. OR	END BLASTING ZONE	
W022-6e	**21X15**	**2.19**	**BK**	**OR**	**MoDOT FL. OR**	**WET PAINT (ARROW PIVOTS)**	(3)
SPECIAL	48X48	16.00	BK	OR	MoDOT FL. OR	GROOVED PAVEMENT AHEAD	(3)
GUIDE SIGNS							
E05-1	36X48	12.00	BK	OR	MoDOT FL. OR	GORE EXIT	(3)
G020-1	60X24	10.00	BK	OR	MoDOT FL. OR	ROAD WORK NEXT XX MILES	
G020-2	48X24	8.00	BK	OR	MoDOT FL. OR	END ROAD WORK	
G020-4	36X18	4.50	BK	OR	MoDOT FL. OR	PILOT CAR FOLLOW ME	
SPECIAL	42X30	8.75	BK	OR	MoDOT FL. OR	PLEASE WAIT FOR PILOT CAR	(3)
G023-1	36X12	3.00	BK	OR	MoDOT FL. OR	WORK ZONE (PLAQUE)	(3) (5)
M04-8a	24X18	3.00	BK	OR	MoDOT FL. OR	END DETOUR	
M04-9L	48X36	12.00	BK	OR	MoDOT FL. OR	DETOUR (LEFT ARROW)	
M04-9R	48X36	12.00	BK	OR	MoDOT FL. OR	DETOUR (RIGHT ARROW)	
M04-10L	48X18	6.00	BK	OR	MoDOT FL. OR	DETOUR (ARROW LEFT)	
M04-10R	48X18	6.00	BK	OR	MoDOT FL. OR	DETOUR (ARROW RIGHT)	
REGULATORY SIGNS							
R1-1	48X48	13.25	WH	RD	MoDOT TYPE 3	STOP	
R1-2	48 TRI.	6.93	RD	WH	MoDOT TYPE 3	YIELD	
R1-2a	36X36	9.00	BK	WH	MoDOT TYPE 3	TO ONCOMING TRAFFIC (PLAQUE)	
R1-3	20X9	1.25	WH	RD	MoDOT TYPE 3	X-WAY (PLAQUE)	
R2-1	36X48	12.00	BK	WH	MoDOT TYPE 3	SPEED LIMIT XX	
R3-1	48X48	16.00	BK/RD	WH	MoDOT TYPE 3	NO RIGHT TURN (SYMBOL)	
R3-2	48X48	16.00	BK/RD	WH	MoDOT TYPE 3	NO LEFT TURN (SYMBOL)	
R3-3	36X36	9.00	BK	WH	MoDOT TYPE 3	NO TURNS	
R3-4	48X48	16.00	BK/RD	WH	MoDOT TYPE 3	NO U-TURN (SYMBOL)	
R3-7L	30X30	6.25	BK	WH	MoDOT TYPE 3	LEFT LANE MUST TURN LEFT	
R3-7R	30X30	6.25	BK	WH	MoDOT TYPE 3	RIGHT LANE MUST TURN RIGHT	
R4-1	36X48	12.00	BK	WH	MoDOT TYPE 3	DO NOT PASS	
R4-2	36X48	12.00	BK	WH	MoDOT TYPE 3	PASS WITH CARE	
R4-7a	36X48	12.00	BK	WH	MoDOT TYPE 3	KEEP RIGHT (HORIZONTAL ARROW)	
R4-8a	36X48	12.00	BK	WH	MoDOT TYPE 3	KEEP LEFT (HORIZONTAL ARROW)	
R5-1	30X30	6.25	RD	WH	MoDOT TYPE 3	DO NOT ENTER	
R5-1a	36X24	6.00	WH	RD	MoDOT TYPE 3	WRONG WAY	
R6-1L	48X18	6.00	BK	WH	MoDOT TYPE 3	ONE WAY ARROW (LEFT)	
R6-1R	48X18	6.00	BK	WH	MoDOT TYPE 3	ONE WAY ARROW (RIGHT)	
R6-2L	24X30	5.00	BK	WH	MoDOT TYPE 3	ONE WAY (LEFT)	
R6-2R	24X30	5.00	BK	WH	MoDOT TYPE 3	ONE WAY (RIGHT)	
R10-6	24X36	6.00	BK	WH	MoDOT TYPE 3	STOP HERE ON RED (45° ARROW)	
R11-2	48X30	10.00	BK	WH	MoDOT TYPE 3	ROAD CLOSED	
R11-3a	60X30	12.50	BK	WH	MoDOT TYPE 3	ROAD CLOSED XX MILES AHEAD LOCAL TRAFFIC ONLY	
R11-4	60X30	12.50	BK	WH	MoDOT TYPE 3	ROAD CLOSED TO THRU TRAFFIC	
CONST-3A	60X48	20.00	BK	OR/WH	MoDOT FL.OR/TYPE 3	FINE SIGN	(3)
CONST-3X	56X12	4.67	BK	WH	MoDOT TYPE 3	SPEEDING/PASSING (PLATE)	(3)

(1) SIGN DEPICTION, ARROW, BORDERS AND SPACING SHALL BE IN ACCORDANCE WITH THE LATEST EDITION OF "STANDARD HIGHWAY SIGNS" BY THE U.S. DEPARTMENT OF TRANSPORTATION - FHWA.

(2) REFER TO THE LATEST EDITION OF MUTCD PART VI BY THE U.S. DEPARTMENT OF TRANSPORTATION - FHWA FOR SIGN DEPICTION. ARROW, BORDERS AND SPACING SHALL CONFORM TO THE GUIDELINES SET FORTH IN THE LATEST EDITION OF "STANDARD HIGHWAY SIGNS" BY THE U.S. DEPARTMENT OF TRANSPORTATION - FHWA.

(3) ARROW, BORDERS AND SPACING SHALL BE IN ACCORDANCE WITH THE LATEST EDITION OF "STANDARD HIGHWAY SIGNS" BY THE U.S. DEPARTMENT OF TRANSPORTATION - FHWA.

(4) USE OF A SUPPLEMENTAL PLATE FOR LINE 1 IS ACCEPTABLE.

(5) PLAQUE AND APPLICABLE REGULATORY SIGN MAY BE MANUFACTURED AS ONE SIGN.

GENERAL NOTES:

SIGN LAYOUTS SHALL BE IN ACCORDANCE WITH THE LATEST EDITION OF "STANDARD HIGHWAY SIGNS" BY THE U.S. DEPARTMENT OF TRANSPORTATION - FHWA, UNLESS SPECIFIED OTHERWISE.

SIGN DIMENSIONS SHOWN ARE MINIMUM. NO ADDITIONAL PAYMENT WILL BE MADE IF CONTRACTORS USE LARGER SIGNS.

NO ADDITIONAL PAYMENT WILL BE MADE FOR PLATES.

ALL PLAQUES SHALL HAVE A BORDER. PLATES SHALL NOT HAVE A BORDER.

MISSOURI HIGHWAYS AND TRANSPORTATION COMMISSION
105 WEST CAPITOL
JEFFERSON CITY, MO 65102
1-888-ASK-MODOT (1-888-275-6636)

STATE OF MISSOURI
KATHRYN PHILLIPS HARVEY
NUMBER PE-23751
PROFESSIONAL ENGINEER
THIS SHEET HAS BEEN SIGNED, SEALED AND DATED ELECTRONICALLY.

TEMPORARY TRAFFIC CONTROL DEVICES

WARNING, GUIDE AND REGULATORY SIGNS

DATE EFFECTIVE: 02/01/2011
DATE PREPARED: 12/8/2010

616.10AN

SHEET NO. 6 OF 8

IF A SEAL IS PRESENT ON THIS SHEET IT HAS BEEN ELECTRONICALLY SEALED AND DATED.

W05-5 (3)

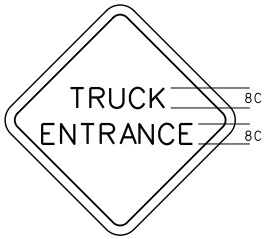

W08-6c (3)

W012-2x (3)

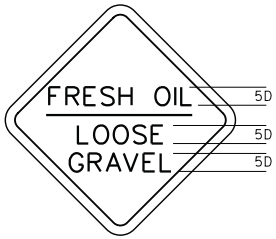

SPECIAL (3)

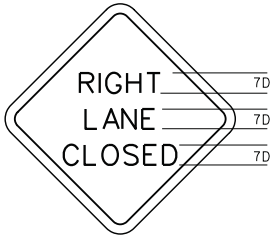

W020-6a (3)(4)

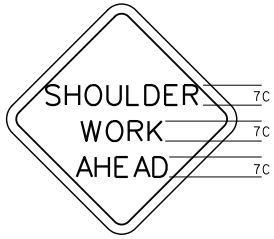

W021-5b (3)

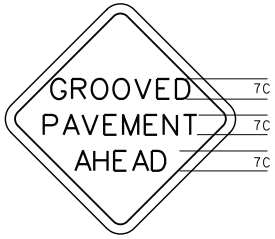

SPECIAL (3)

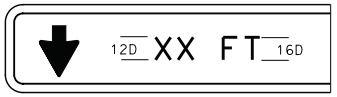

W012-3a (3)

W012-3b (3)

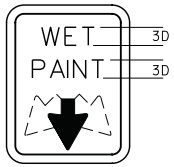

W022-6e (3)

G023-1 (3)

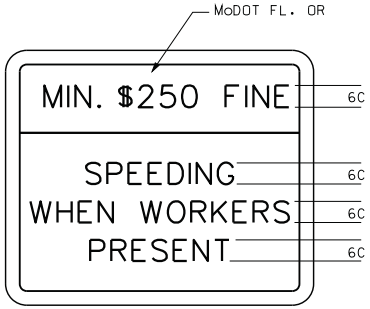

CONST-3A (3)

SPECIAL (3)

SPECIAL (3)

CONST-3X (3)

(1) SIGN DEPICTION, ARROW, BORDERS AND SPACING SHALL BE IN ACCORDANCE WITH THE LATEST EDITION OF "STANDARD HIGHWAY SIGNS" BY THE U.S. DEPARTMENT OF TRANSPORTATION - FHWA.

(2) REFER TO THE LATEST EDITION OF MUTCD PART VI BY THE U.S. DEPARTMENT OF TRANSPORTATION - FHWA FOR SIGN DEPICTION. ARROW, BORDERS AND SPACING SHALL CONFORM TO THE GUIDELINES SET FORTH IN THE LATEST EDITION OF "STANDARD HIGHWAY SIGNS" BY THE U.S. DEPARTMENT OF TRANSPORTATION - FHWA.

(3) ARROW, BORDERS AND SPACING SHALL BE IN ACCORDANCE WITH THE LATEST EDITION OF "STANDARD HIGHWAY SIGNS" BY THE U.S. DEPARTMENT OF TRANSPORTATION - FHWA.

(4) USE OF A SUPPLEMENTAL PLATE FOR LINE 1 IS ACCEPTABLE.

(5) PLAQUE AND APPLICABLE REGULATORY SIGN MAY BE MANUFACTURED AS ONE SIGN.

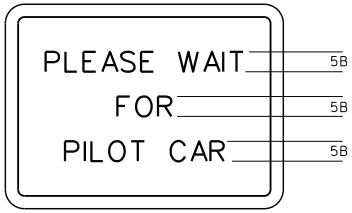

SPECIAL (3)

GENERAL NOTES:

SIGN LAYOUTS SHALL BE IN ACCORDANCE WITH THE LATEST EDITION OF "STANDARD HIGHWAY SIGNS" BY THE U.S. DEPARTMENT OF TRANSPORTATION - FHWA UNLESS SPECIFIED OTHERWISE.

SIGN DIMENSIONS SHOWN ARE MINIMUM. NO ADDITIONAL PAYMENT WILL BE MADE IF CONTRACTORS USE LARGER SIGNS.

NO ADDITIONAL PAYMENT WILL BE MADE FOR PLATES.

ALL PLAQUES SHALL HAVE A BORDER. PLATES SHALL NOT HAVE A BORDER.

LETTER DIMENSIONS SHALL BE AS SHOWN.

MISSOURI HIGHWAYS AND TRANSPORTATION COMMISSION
105 WEST CAPITOL
JEFFERSON CITY, MO 65102
1-888-ASK-MODOT (1-888-275-6636)

STATE OF MISSOURI
KATHRYN PHILLIPS HARVEY
NUMBER PE-23751
PROFESSIONAL ENGINEER
THIS SHEET HAS BEEN SIGNED, SEALED AND DATED ELECTRONICALLY.

TEMPORARY TRAFFIC CONTROL DEVICES

DATE EFFECTIVE: 02/01/2011
DATE PREPARED: 12/8/2010

616.10AN

SHEET NO. 7 OF 8

IF A SEAL IS PRESENT ON THIS SHEET IT HAS BEEN ELECTRONICALLY SEALED AND DATED.

AFFIDAVIT
COMPLIANCE WITH THE PREVAILING WAGE LAW

Before me, the undersigned Notary Public, in and for the County of_____, State of _____, personally came and appeared_____

(Name)

_____of_____

(Title) (Company Name)

(a corporation)(a partnership)(a proprietorship) and after being duly sworn did depose and say that all provisions and requirements set out in Chapter 290, Sections 290.210 through and including 290.340, Missouri Revised Statutes, pertaining to the payment of wages to workers employed on public works projects have been fully satisfied and there has been no exception to the full and complete compliance with said provisions and requirements with Wage Determination No._____ or Annual Wage Order No._____ issued by the Division of Labor Standards on project_____,

(Job Number)

_____,

(Route or location, if building construction)

_____ County, Missouri, and completed on the ____ day of _____, 20___.

_____

Signature

Subscribed and sworn to me this ____ day of _____, 20____.

My commission expires _____, 20_____.

Notary Public

(Revised 03-23-00)

Missouri
Division of Labor Standards

WAGE AND HOUR SECTION

JEREMIAH W. (JAY) NIXON, Governor

Annual Wage Order No. 23

Section 050

JEFFERSON COUNTY

In accordance with Section 290.262 RSMo 2000, within thirty (30) days after a certified copy of this Annual Wage Order has been filed with the Secretary of State as indicated below, any person who may be affected by this Annual Wage Order may object by filing an objection in triplicate with the Labor and Industrial Relations Commission, P.O. Box 599, Jefferson City, MO 65102-0599. Such objections must set forth in writing the specific grounds of objection. Each objection shall certify that a copy has been furnished to the Division of Labor Standards, P.O. Box 449, Jefferson City, MO 65102-0449 pursuant to 8 CSR 20-5.010(1). A certified copy of the Annual Wage Order has been filed with the Secretary of State of Missouri.

Original Signed by
John E. Lindsey, Director
Division of Labor Standards

This Is A True And Accurate Copy Which Was Filed With The Secretary of State: **March 10, 2016**

Last Date Objections May Be Filed: **April 11, 2016**

Prepared by Missouri Department of Labor and Industrial Relations

OCCUPATIONAL TITLE	** Date of Increase	*	Basic Hourly Rates	Over-Time Schedule	Holiday Schedule	Total Fringe Benefits
Asbestos Worker (H & F) Insulator			$38.36	55	60	$21.41
Boilermaker			$32.76	126	7	$30.10
Bricklayer and Stone Mason	6/16		$32.50	72	5	$21.80
Carpenter	6/16	e	$36.98	77	41	$16.30
Cement Mason	6/16		$31.16	80	6	$17.95
Communication Technician			$31.35	44	47	$9.53 + 31.75%
Electrician (Inside Wireman)	10/16		$35.70	82	71	$10.84 + 38.5%
Electrician (Outside-Line Construction\Lineman)	9/16		$43.75	43	45	$5.25 + 36%
Lineman Operator	9/16		$37.73	43	45	$5.25 + 36%
Groundman	9/16		$29.11	43	45	$5.25 + 36%
Elevator Constructor		a	$46.04	26	54	$31.645
Glazier			$33.40	87	31	$23.55
Ironworker			$32.88	11	8	$23.825
Laborer (Building):						
General		b	$26.71	73	7	$12.77
First Semi-Skilled		d	$26.71	73	7	$12.77
Second Semi-Skilled		c	$26.71	73	7	$12.77
Lather			USE CARPENTER RATE			
Linoleum Layer and Cutter	6/16		$31.83	92	26	$16.00
Marble Mason	6/16		$31.83	76	51	$14.62
Marble Finisher	6/16		$26.42	76	51	$13.95
Millwright			$36.34	77	41	$15.75
Operating Engineer						
Group I	6/16		$32.41	3	66	$25.13
Group II	6/16		$32.41	3	66	$25.13
Group III	6/16		$30.51	3	66	$25.13
Group III-A	6/16		$32.41	3	66	$25.13
Group IV	6/16		$27.05	3	66	$25.13
Group V	6/16		$27.05	3	66	$25.13
Painter			$31.65	104	12	$13.76
Pile Driver			USE CARPENTER RATE			
Pipe Fitter	7/16		$38.00	91	69	$26.93
Plasterer	7/16		$31.56	67	3	$17.98
Plumber	7/16		$38.00	91	69	$26.93
Roofer \ Waterproofer			$31.35	15	73	$17.12
Sheet Metal Worker			$39.63	32	25	$21.72
Sprinkler Fitter - Fire Protection			$41.56	66	18	$22.02
Terrazzo Worker	6/16		$32.30	116	5	$13.79
Terrazzo Finisher			$30.35	116	5	$11.84
Tile Setter	6/16		$31.83	76	51	$14.62
Tile Finisher	6/16		$26.42	76	51	$13.95
Traffic Control Service Driver			$28.775	22	55	$9.045
Truck Driver-Teamster			$30.41	35	36	$10.82

Fringe Benefit Percentage is of the Basic Hourly Rate

**Annual Incremental Increase

OCCUPATIONAL TITLE	** Date of Increase	Basic Hourly Rates	Over-Time Schedule	Holiday Schedule	Total Fringe Benefits

* Welders receive rate prescribed for the occupational title performing operation to which welding is incidental.

Use Building Construction Rates on Building construction in accordance with the classifications of construction work established in 8 CSR 30-3.040(2).

Use Heavy Construction Rates on Highway and Heavy construction in accordance with the classifications of construction work established in 8 CSR 30-3.040(3).

a - Vacation: Employees over 5 years - 8%; Employees under 5 years - 6%
b - Projects over $1 Million - $26.71; Projects under $1 Million - $24.56
c - Projects over $1 Million - $26.71.; Projects under $1 Million - $24.56
d - Projects over $1 Million - $26.71; Projects under $1 Million - $24.56
**e - Projects over $1 Million - $36.98; Projects under $1 Million - $31.89

JEFFERSON COUNTY
BUILDING CONSTRUCTION - OVERTIME SCHEDULE

FED: Minimum requirement per Fair Labor Standards Act means time and one-half (1 ½) shall be paid for all work in excess of forty (40) hours per work week.

NO. 3: Means the regular workday shall consist of eight (8) consecutive hours, exclusive of a thirty (30) minute lunch period, with pay at the straight time rate. The regular workday shall begin between the hours of 6:00 a.m. and 9:00 a.m. The Employer may have the option to schedule the work week from Monday through Thursday at ten (10) hours per day at the straight time rate of pay with all hours in excess of ten (10) hours in any one day to be paid at the applicable overtime rate. If the Employer elects to work from Monday through Thursday and is stopped due to inclement weather, holiday or other conditions beyond the control of the Employer, they shall have the option to work Friday at the straight time rate of pay to complete the forty (40) hours for the workweek. All overtime work performed on Monday through Saturday shall be paid at time and one-half (1½) the hourly rate plus an amount equal to one-half (½) of the hourly Total Indicated Fringe Benefits. All work performed on Sundays and recognized holidays shall be paid at double (2) the hourly rate plus an amount equal to the hourly Total Indicated Fringe Benefits. Shifts may be established when considered necessary by the Employer. Shift hours and rates will be as follows. If shifts are established, work on the First Shift will begin between 6:00 a.m. and 9:00 a.m. and consist of eight (8) hours of work plus one-half hour unpaid lunch. Hours worked during the first shift will be paid at the straight time rate of pay. The second shift shall start eight hours after the start of the first shift and consist of eight (8) hours of work plus one-half hour unpaid lunch. Work on the second shift will begin between 2:00 p.m. and 5:00 p.m. and be paid the straight time rate plus $2.50 per hour. The third shift shall start eight hours after the start of the second shift and consist of eight (8) hours plus one-half hour unpaid lunch. Work on the third shift will begin between 10:00 p.m. and 1:00 a.m. and be paid the straight time rate plus $3.50 per hour. The additional amounts that are to be paid are only applicable when working shifts. Shifts that begin on Saturday morning through those shifts which end on Sunday morning will be paid at time and one-half these rates. Shifts that begin on Sunday morning through those shifts which end on Monday morning will be paid at double time these rates.

NO. 11: Means eight (8) hours shall constitute a day's work, with the starting time to be established between 6:00 a.m. and 8:00 a.m. from Monday to Friday. Time and one-half (1½) shall be paid for first two (2) hours of overtime Monday through Friday and the first eight (8) hours on Saturday. All other overtime hours Monday through Saturday shall be paid at double (2) time rate. Double (2) time shall be paid for all time on Sunday and recognized holidays or the days observed in lieu of these holidays.

NO. 15: Means the regular working day shall be scheduled to consist of at least eight (8) hours, but no more than ten (10) consecutive hours, exclusive of the lunch period. The regular working day may be scheduled to commence at any time between the hours of 5:00 a.m. and 10:00 a.m. All work performed in excess of forty (40) hours in one work week, or in excess of ten (10) hours in one work day shall be paid at the rate of one and one-half (1½) times the regular hourly wage scale. Any work performed on a Saturday shall be paid for at the rate of one and one-half (1½) times the regular hourly wage scale unless such Saturday work falls under the category of Saturday Make-Up Day. Any work performed by Employees anywhere on Sunday or recognized holidays, shall be paid for at the rate of double (2) time the regular wage scale. If, during the course of a work week, an Employee is unable to work for any reason, and, as a result, that Employee has not accumulated forty (40) hours of compensable time at the straight time rate, the Employer, at his option may offer the Employee the opportunity to work on Saturday at straight time; provided, however, if during the period worked by said Employee on Saturday, the Employee's compensable time at the straight time rate exceeds forty (40) hours, all time worked in excess of the forty (40) hours will be paid at the rate of one and one-half (1½) times the regular hourly wage scale.

NO. 22: Means a regular work week of forty (40) hours will start on Monday and end on Friday. The regular work day shall be either eight (8) or ten (10) hours. If a crew is prevented from working forty (40) hours Monday through Friday, or any part thereof by reason of inclement weather, Saturday or any part thereof may be worked as a make-up day at the straight time rate. Employees who are part of a regular crew on a make-up day, notwithstanding the fact that they may not have been employed the entire week, shall work Saturday at the straight time rate. A workday is to begin between 6:00 a.m. and 9:00 a.m. However, the project starting time may be advanced or delayed if mutually agreed to by the interest parties. For all time worked on recognized holidays, or days observed as such, double (2) time shall be paid.

JEFFERSON COUNTY
BUILDING CONSTRUCTION - OVERTIME SCHEDULE

NO. 26: Means that the regular working day shall consist of eight (8) hours worked between 6:00 a.m., and 5:00 p.m., five (5) days per week, Monday to Friday, inclusive. Hours of work at each jobsite shall be those established by the general contractor and worked by the majority of trades. (The above working hours may be changed by mutual agreement). Work performed on Construction Work on Saturdays, Sundays and before and after the regular working day on Monday to Friday, inclusive, shall be classified as overtime, and paid for at double (2) the rate of single time. The employer may establish hours worked on a jobsite for a four (4) ten (10) hour day work week at straight time pay for construction work; the regular working day shall consist of ten (10) hours worked consecutively, between 6:00 a.m. and 6:00 p.m., four (4) days per week, Monday to Thursday, inclusive. Any work performed on Friday, Saturday, Sunday and holidays, and before and after the regular working day on Monday to Thursday where a four (4) ten (10) hour day workweek has been established, will be paid at two times (2) the single time rate of pay. The rate of pay for all work performed on holidays shall be at two times (2) the single time rate of pay.

NO. 32: The regular working day shall consist of eight (8) hours of labor on the job between six (6) a.m. and four (4) p.m. and the regular working week shall consist of five (5) consecutive eight (8) hour day's of labor on the job beginning with Monday and ending with Friday of each week. The normal work week is 40 hours. All full-time or part-time labor performed during such hours shall be recognized as regular working hours and paid for at the regular hourly rate. All work performed during regular work hours on Saturdays will be paid at time and one-half (1 ½). All work performed outside of regular working hours and performed during the regular work week, shall be at double (2) times the regular rate, except that the first two (2) hours following the regular work day shall be paid at one and one-half (1½) times the regular rate. An early starting time of 6:00 a.m. may be used mutually agreed upon by the interested parties. SHIFT RATE: Shift work would start after 4:00 p.m. to 6:00 a.m. The first 8 hours would be at 115% of the basic wage rate. Overtime Monday through Friday would be at 1 ½ of base shift rate. Saturday regular work day hours – 1½ of base shift rate. Saturday – work after 8 hours – 2 times the basic wage rate. Sunday and Holidays – 2 times the basic wage rate. All work performed on recognized holidays and Sundays shall be paid double (2) time. Appropriate overtime rates to be based on fifteen minute increments.

NO. 35: Means a regular work week of forty (40) hours, will start on Monday and end on Friday. The regular work day shall be either eight (8) or ten (10) hours. If a crew is prevented from working forty (40) hours Monday through Friday, or any part thereof by reason of inclement weather, Saturday or any part thereof maybe worked as a make-up day at the straight time rate. Employees who are part of a regular crew on a make-up day, notwithstanding the fact that they may not have been employed the entire week, shall work Saturday at the straight time rate. A work day is to begin between 6:00 a.m. and 9:00 a.m. However, the project starting time maybe advanced or delayed if mutually agreed to by the interested parties. For all time worked on recognized holidays, or days observed as such, double (2) time shall be paid.

NO. 43: Eight (8) hours shall constitute a work day between the hours of 7:00 a.m. and 4:30 p.m. Forty (40) hours within five (5) days, Monday through Friday inclusive, shall constitute the work week. Work performed in the 9th and 10th hour, Monday through Friday, shall be paid at time and one-half (1½) the regular straight time rate of pay. Contractor has the option to pay two (2) hours per day at the time and one-half (1½) the regular straight time rate of pay between the hours of 6:00 a.m. and 5:30 p.m., Monday through Friday. Work performed outside the regularly scheduled working hours and on Saturdays, Sundays and recognized legal holidays, or days celebrated as such, shall be paid for at the rate of double (2) time.

NO. 44: Means forty (40) hours shall constitute a work week, Monday through Friday. Eight (8) hours shall constitute a work day. Hours of work shall be between the hours of 7:00 a.m. and 4:30 p.m. All work performed before 7:00 a.m. and after 4:30 p.m. and all work performed in excess of eight (8) hours in any one work day, over forty (40) hours in any work week and the first eight (8) hours of work on Saturday, shall be paid at the rate of one and one-half (1½) times the regular rate of pay. All hours worked in excess of eight (8) hours on Saturday, all hours worked on Sunday and on holidays, or days that may be celebrated as such, and as designated by the federal government, shall be paid at two (2) times the regular rate of pay. All shifts for work performed between the hours of 4:30 p.m. and 1:00 a.m. shall receive eight (8) hours pay at the regular hourly rate of pay plus two dollars ($2.00) per clock hour. All work performed between the hours of 12:30 a.m. and 9:00 a.m. on a third shift shall receive eight (8) hours pay at the regular hourly rate plus four dollars ($4.00) per clock hour. All overtime work required after the completion of a regular shift shall be paid at one and one-half times (1½ x) the "shift" hourly rate.

JEFFERSON COUNTY
BUILDING CONSTRUCTION - OVERTIME SCHEDULE

NO. 55: Means the regular work day shall be eight (8) hours between 6:00 a.m. and 4:30 p.m. The first two (2) hours of work performed in excess of the eight (8) hour work day, Monday through Friday, and the first ten (10) hours of work on Saturday, shall be paid at one & one-half (1½) times the straight time rate. All work performed on Sunday, observed holidays and in excess of ten (10) hours a day, Monday through Saturday, shall be paid at double (2) the straight time rate.

NO. 66: Means eight (8) hours shall constitute a day's work beginning at 7:00 a.m. (or 8:00) A.M. and ending at 3:30 (or 4:30) P.M. The work week shall be forty (40) hours beginning Monday at 7:00 a.m. (or 8:00) A.M. and ending Friday at 3:30 (or 4:30) P.M. The Employer at his option may use a flexible starting time between the hours of 6:00 a.m. and 8:00 a.m. All overtime, that is worked outside of the above established working hours of Monday through Friday, shall be paid at double (2) time, including Saturdays, Sundays and Holidays.

NO. 67: Means eight (8) hours shall constitute a day's work, with a flexible starting time to begin between 6:00 a.m. to 8:00 a.m., five (5) days a week, Monday through Friday. Any work over eight (8) hours in any one day shall be at the overtime rate, which is time & one-half (1½). Any work on Saturday shall be at time & one-half (1½), unless a Make-Up Day due to inclement weather is in effect. Any work on Sundays or holidays shall be at double (2) time. Four (4) days, ten (10) hours each day to be worked during Monday through Friday, shall be paid at straight time. A Make-Up Day Due To Inclement Weather Only - Employee(s) will be permitted to work an eight (8) hour make-up day on Saturday only, and the employee will receive the regular straight time wage rate.

NO. 72: Means that except as is otherwise provided herein, the work week shall be determined to begin at 8:00 a.m. Wednesday and end at 4:30 p.m. on the following Tuesday. Except as herein provided, working hours are from 8:00 a.m. to 11:55 a.m. and 12:30 p.m. to 4:25 p.m. and no more than the regular hours shall be worked during the forenoon or afternoon at the regular rate. In the case of days of inclement weather starting time and quitting time may be adjusted so long as the hours worked on such days do not exceed eight (8) and do not extend beyond 4:30 p.m. In circumstances where the Employee or Employees have regularly been working overtime on a particular day or days, no adjustment in the starting time shall operate to deprive Employees of overtime pay, which they would have otherwise received but for the change in the starting time. The parties understand that the application of the provisions of the preceding sentence will result in Employees receiving overtime pay even where they have not worked more than with (8) hours on a particular day. Regardless of the staring time, the forenoon working hours shall end at 11:55 a.m. and the afternoon working hours shall begin at 12:30 p.m. and end 8 hours and 25 minutes after the staring time fixed by the Employer for forenoon hours. Work performed by an employee on a non-holiday Saturday, except as hereinafter provided, or at night or before or after regular working hours on a non-holiday weekday, shall be considered overtime work, for which Employees working during such time shall be paid at the rate of one and one-half (1½) times their regular hourly wage rate for each hour or fraction thereof, worked during such time. Work performed on a Sunday or the recognized holidays shall be considered overtime work for which the Employee shall be paid twice the amount of his or her regular hourly wage rate for each hour or fraction thereof worked on any such day.

NO. 73: Means eight (8) hours shall constitute a day's work to begin at 8:00 a.m. and end at 4:30 p.m. The starting time may be advanced one (1) or two (2) hours. Employees shall receive time and one-half (1½) for all time they are required to work before 8:00 a.m., during the lunch period or after 4:30 p.m. unless the starting time is advanced as provided above. Forty (40) hours shall constitute a week's work, Monday through Friday, or any part thereof by reason of inclement weather (rain or mud), Saturday or any part thereof may be worked as a make-up day at the straight time rate. The Employer shall have the option of working five (5) eight (8) hour day's or four (4) ten (10) hour day's Monday through Friday. If an Employer elects to work five (5) eight (8) hour days during any work week, hours worked more than eight (8) per day or forty (40) per week shall be paid at time and one-half (1½) the hourly rate Monday through Friday. If an employer elects to work four (4) ten (10) hour days in any week, work performed more than ten (10) hours per day or forty (40) hours per week shall be paid at time and one-half (1½) the hourly rate Monday through Friday. If an Employer is working ten (10) hour days and loses a day due to inclement weather, he may work ten (10) hours Friday at straight time. All time over the regular workday as defined and all hours worked on Saturday shall be paid at the rate of one and one-half (1½) the regular rate of wages. If workmen are required to work recognized holidays or days observed as such, or on Sunday, they shall receive double (2) the regular rate of pay for such work. If a laborer is assisting another craft on a make-up day and the other craft is receiving overtime pay the laborer shall receive the same overtime multiple as the craft assisted. No overtime rates shall be broken down into less than thirty (30) minute units of time. Projects that cannot be performed during regular workday: Building construction work, if required by the owner, the contractor may perform work outside the normal hours and employees shall be paid applicable straight time hourly wage rate plus a premium of $1.50 per hour for the first eight hours worked. Any hours worked in excess of eight hours shall be paid at the applicable overtime rate plus $1.50 per hour premium. Shift work: The Employer may elect to work, one, two or three shifts on any work. When two or more shits are worked on any operation, the first shift or day shift shall consist of eight (8) hours exclusive of lunch time; the second or swing shift consist of eight (8) hours' work for eight and one-half hours pay, exclusive of lunch time; the third or graveyard shift shall consist of eight (8) hours' work for nine (9) hours' pay exclusive of lunch time. The swing shift shall be paid twenty-five cents ($.25) per hour above the regular rate of pay. The graveyard shift shall be paid fifty cents ($.50) per hour above the regular rate of pay. Multiple shift (second or third shift) operation will not be construed on the entire project if at any time it is deemed advisable and necessary for the employer to a specific operation. However, no shift shall be started between midnight and 6:00 a.m. except the graveyard shift on a three (3) shift operation, or except in unusual or emergency, regardless if the project is working one (1) or two (2) shift. Shifts shall be established for a minimum of three (3) consecutive workdays. When 2-10 or 12 hour shifts are worked, the second shift shall receive $.50 per hour above regular rate of pay. When the employer elects to work 2-10 or 12 hour shifts, the first 8 hours shall be at straight time rates. The remaining 2 or 4 hours shall be at the overtime rate of time and one-half.

NO. 76: Means the standard workday shall consist of eight (8) hours of work between the hours of 8:00 a.m. and 4:30 p.m. with a thirty (30) minute unpaid lunch hour occurring in the middle of the shift. The standard workweek shall consist of five standard workdays commencing on Monday and ending on Friday. The normal starting and quitting times may be changed by mutual consent of interested parties. All time worked before and after the established eight (8) hour workday, Monday through Friday, and all time worked on Saturday, shall be paid for at the rate of time & one-half (1½) the hourly base wage rate in effect. All time worked on Sunday and holidays shall be paid at the rate of double (2) the hourly wage in effect. All work done on Saturday will be done at time & one-half (1½), unless Saturday shall be used as a make-up day. If an employee should lose one or more days in a work week and use Saturday as a make-up day the pay shall be at the regular hourly base wage rate and benefits.

NO. 77: Means the regular workday shall consist of eight (8) consecutive hours, exclusive of a thirty (30) minute lunch period, with pay at the regular straight time hourly rate. The regular workday shall begin on the job site between the hours of 6:00 a.m. and 8:00 a.m. with the starting time to be determined by the Employer, unless project owner requires different starting time. This adjustable starting time can, at the Employer's option, be staggered to permit starting portions of the work force at various times within the prescribed hours. The Employer may establish a four (4) ten (10) hour shift exclusive of the thirty (30) minute lunch period at the straight time wage rate. Forty (40) hours per week shall constitute a week's work Monday through Thursday. In the event a job is down due to weather conditions, safety or other conditions beyond the control of the Employer, then Friday may, at the option of the employer, be worked as a make-up day at the straight time wage rate. Straight time is not to exceed ten (10) hours a day or forty (40) hours per week. Time and one-half (1 ½) shall be paid for all overtime hours worked during the week, Monday through Friday and for all work performed on Saturday. Double (2) time shall be paid for all time worked on Sunday and recognized holidays.

JEFFERSON COUNTY
BUILDING CONSTRUCTION - OVERTIME SCHEDULE

NO. 80: Means eight (8) hours shall constitute the regular work day and forty (40) hours a work week, Monday through Friday. The Employer shall establish the starting time between 6:30 a.m. through 9:00 a.m. An Employer may further adjust the starting time up to 9:30 a.m. throughout the year. Time and one-half (1½) shall be paid after eight (8) consecutive hours worked after the established starting time and for hours worked before the established starting time. Time and one-half (1½) shall be paid for work performed on Saturdays. Work performed on Sundays and Holidays shall be paid at the double (2) time rate of pay. The Employer when working on Highway and Road Work may have the option to schedule the work week for his paving crew only from Monday through Thursday at ten (10) hours per day at the straight time rate of pay with all hours in excess of ten (10) hours in any one day to be at the applicable overtime rate of time and one-half (1½). If the Employer elects to work from Monday through Thursday and is stopped due to inclement weather (rain, snow, sleet falling), the Employer shall have the option to work Friday at the straight time rate of pay to complete the forty (40) hours.

NO. 82: Means the work day shall consist of eight (8) hours worked between 7:00 a.m. and 4:30 p.m. Forty (40) hours will constitute the work week from Monday through Friday, inclusive. Up to four (4) hours of overtime work per day performed before or after the assigned normal work day, (twelve (12) continuous hours, starting no earlier than 6:00 a.m., Monday through Friday), shall be paid at a rate of one and one-half times (1.5x) that employee's hourly rate. Any additional overtime, Monday through Friday, shall be paid at two times (2x) the regular rate of pay. The first eight hours of overtime work on Saturday shall be paid at the rate of one and one-half times (1.5x) the regular rate of pay. Hours worked in excess of eight (8) hours on Saturday shall be paid at two times (2x) the regular rate of pay. Double time shall be paid for work performed on Sundays, recognized legal holidays or days that may be celebrated as such as designated by the federal government. All shifts for work performed between the hours of 4:30 p.m. and 1:00 a.m. shall be paid at the regular hourly rate plus two dollars ($2.00) per clock hour. All shifts for work performed between the hours of 12:30 a.m. and 9:00 a.m. shall be paid at the regular hour rate plus four dollars ($4.00) per clock hour. All overtime work required after the completion of a regular shift shall be paid at one and one-half times (1.5x) the "shift" hourly rate.

NO. 87: Means eight (8) hours starting between 6:00 a.m. and 8:00 a.m. and ending between 2:30 p.m. and 4:30 p.m. at the Employers discretion shall constitute a day's work. Any work prior to 6:00 a.m. or after eight (8) hours shall be paid at the overtime rate. Five (5) days from Monday through Friday inclusive shall constitute a regular work week. All hours before and after these regular hours shall be considered overtime and shall be paid for at the rate of double (2) time. All work on Saturday and Sunday shall be paid at double (2) the prevailing scale of wages.

NO. 91: Means eight (8) hours shall constitute a day's work commencing at 7:00 a.m. and ending at 3:30 p.m., allowing one-half (½) hour for lunch. The option exists for the Employer to use a flexible starting time between the hours of 6:00 a.m. and 9:00 a.m. The regular workweek shall consist of forty (40) hours of five (5) workdays, Monday through Friday. The workweek may consist of four (4) ten (10) hour days from Monday through Thursday, with Friday as a make-up day. If the make-up day is a holiday, the employee shall be paid at the double (2) time rate. The employees shall be paid time and one-half (1½) for work performed on Saturdays, before the regular starting time or after the regular quitting time or over eight (8) hours per work day (unless working a 10-hour work day, then time and one-half (1½) is paid for work performed over ten (10) hours a day) or over forty (40) hours per work week. Work performed on Sundays and recognized holidays shall be paid at the double (2) time rate of pay. SHIFT WORK: When it is necessary for the project to operate in shifts, there will be three (3) eight (8) hour shifts commencing at 8:00 a.m. Shift work must continue for a period of not less than three (3) consecutive work days, two (2) days which must be regular work days (Monday through Friday). In the event the second or third shift of any regular work day shall fall into a Saturday or a holiday, such extension into a Saturday or holiday shall be considered as part of the previous workday and employees shall be paid at the regular shift rate. The first day shift shall work a regular eight (8) hour day at regular rates. The second shift shall be eight (8) hours regular time pay plus $2.50 per hour premium for eight (8) hours work. Third shift will be for eight (8) hours regular time pay plus $3.00 per hour premium for eight (8) hours work.

NO. 92: Means all work performed from 8:00 a.m. to 4:30 p.m., Monday through Friday, will be at straight time pay up to forty (40) hours per week. All work performed Monday through Friday before 8:00 a.m. and after 4:30 p.m. will be done at time and one-half (1½). All work done on Saturday will be done at time and one-half (1½), unless the employer and employee agree that Saturday shall be used as a make-up day. The Employer may use a flexible starting time of 7:00 a.m. to 8:00 a.m., and quitting time of 3:30 p.m. to 4:30 p.m., and any such different work starting time shall determine whether wages are payable at the straight rate or the premium rate. All work performed on Saturday shall be paid for at time and one-half (1½), unless the Saturday has been used as a make-up day. All work performed on Sunday and holidays shall be paid for at the rate of double (2) time.

JEFFERSON COUNTY
BUILDING CONSTRUCTION - OVERTIME SCHEDULE

NO. 104: Means eight (8) hours per day shall constitute a standard work day between the hours of 6:00 a.m. and 8:00 p.m. The standard work week shall be forty (40) hours between 6:00 a.m. on Monday and ending 8:00 p.m. on Friday. An overtime rate of time and one-half (1½) the base hourly rate shall be paid on all hours in excess of eight (8) hours in a day Monday through Friday. Saturdays shall be considered overtime and work done on Saturday shall be paid at time and one-half (1½) the prevailing scale. Sundays and holidays shall be considered overtime and work done on these days shall be paid at double (2) the prevailing scale.

NO. 116: Means the standard work day shall consist of eight (8) hours of work between the hours of 8:00 a.m. and 4:30 p.m. The standard work week shall consist of five standard work days commencing on Monday and ending on Friday inclusive. All time worked before and after the established eight (8) hour work day, Monday through Friday, and all time worked on Saturdays, shall be paid for at the rate of time & one-half (1½) the hourly base wage rate in effect. All time worked on Sundays and recognized holidays shall be paid for at the rate of double (2) the hourly base wage rate in effect.

NO. 126: Means eight (8) hours per day shall constitute a day's work and forty (40) hours per week, Monday through Friday, shall constitute a week's work. The regular starting time shall be 8:00 a.m. If a second or third shift is used, the regular starting time of the second shift shall be 4:30 p.m. and the regular starting period for the third shift shall be 12:30 a.m. These times may be adjusted by the employer. The day shift shall work a regular eight (8) hours shift as outlined above. Employees working a second shift shall receive an additional $0.25 above the regular hourly rate and perform seven and one-half (7½) hours work for eight (8) hours pay. Third shift employees shall be paid an additional $0.50 above the regular hourly rate and work seven (7) hours for eight (8) hours pay. When circumstances warrant, the Employer may change the regular workweek to four (4) ten-hour days at the regular time rate of pay. All time worked before and after the established workday of eight (8) hours, Monday through Friday, and all time worked on Saturday shall be paid at the rate of time and one-half (1½) except in cases where work is part of an employee's regular Friday shift. All time worked on Sunday and recognized holidays shall be paid at the double (2) time rate of pay except in cases where work is part of an employee's previous day's shift. For all overtime hours worked $27.96 of the fringe benefits portion of the prevailing wage shall be paid at the same overtime rate at which the cash portion of the prevailing wage is to be paid. The remaining $1.24 of the fringe benefit portion of the prevailing wage may be paid at straight time.

JEFFERSON COUNTY
HOLIDAY SCHEDULE – BUILDING CONSTRUCTION

NO. 3: All work done on New Year's Day, Decoration Day, July 4th, Labor Day, Veteran's Day, Thanksgiving and Christmas shall be compensated at the double (2) time rate of pay. When any of these holidays fall on a Sunday, the following Monday shall be observed.

NO. 5: All work that shall be done on New Year's Day, Memorial Day, Independence Day, Labor Day, Veteran's Day, Thanksgiving Day, and Christmas Day shall be paid twice the amount of his or her regular hourly wage rate for each hour of fraction thereof worked on any such day .

NO. 6: The following days are recognized as holidays: New Year's Day, Memorial Day, Fourth of July, Labor Day, Veterans Day, Thanksgiving Day, Christmas Day and any additional holidays which may be mutually agreed upon. Whenever any such holiday falls on a Sunday, the following Monday shall be recognized and observed as the holiday. Work performed on Sundays and holidays shall be paid at the double time rate of pay. No work shall be performed on Labor Day.

NO. 7: The following days are assigned days and are recognized as holidays: New Year's Day, Memorial Day, Independence Day, Labor Day, Veteran's Day, Thanksgiving Day, and Christmas Day. If a holiday falls on a Sunday, it shall be observed on the following Monday. If a holiday falls on a Saturday, it shall be observed on the preceding Friday. No work shall be performed on Labor Day except in case of jeopardy to work under construction. This is applied to protect Labor Day. When a holiday falls during the normal workweek, Monday through Friday, it shall be counted as eight (8) hours toward the forty (40) hour week. However, no reimbursement for these eight (8) hours is to be paid to the workman unless worked. If workman are required to work the above enumerated holidays or days observed as such, or on Sunday, they shall receive double (2) the regular rate of pay for such work.

NO. 8: All work performed on New Year's Day, Memorial Day, Independence Day, Labor Day, Veteran's Day, Thanksgiving Day, and Christmas Day, or the days observed in lieu of these holidays, shall be paid at the double time rate of pay.

NO. 12: All work done on New Year's Day, Decoration Day, Independence Day, Veteran's Day, Thanksgiving Day and Christmas Day shall be paid at the double time rate of pay. Should any of these days fall on Sunday, then the following day shall be observed as the holiday. Under no circumstances shall employees be permitted to work on Labor Day.

NO. 18: All work done on New Year's Day, Memorial Day, July 4th, Labor Day, Veteran's Day, Thanksgiving Day, the Friday following Thanksgiving and Christmas Day shall be paid at the double time rate of pay. When one of the above holidays falls on Sunday, the following Monday shall be considered the holiday, and when one of the above holidays falls on Saturday, the preceding Friday shall be considered the holiday, and all work performed on said day(s) shall be paid at the double time rate.

NO. 25: All work done on New Year's Day, Martin Luther King Day, Memorial Day, Independence Day, Labor Day, Veteran's Day, Thanksgiving Day, the day after Thanksgiving, Christmas Day, Presidential Election Day, or days locally observed as such, and Saturday and Sunday shall be recognized as holidays and shall be paid at the double (2) time rate of pay. If a named holiday falls on a Saturday, the holiday will be observed on the preceding Friday. When a named holiday falls on Sunday, the Monday after will be observed as the holiday. Appropriate overtime rates to be based on fifteen minute increments.

NO. 26: All work done on New Year's Day, Memorial Day, Fourth of July, Labor Day, Veteran's Day, Thanksgiving Day and Christmas Day shall be paid at the double time rate of pay. When a Holiday occurs on Saturday it shall not be observed on either the previous Friday or the following Monday. Such days shall be regular work days. If such a holiday occurs on Sunday it shall be observed on the following Monday.

NO. 31: All work done on New Year's Day, Presidents Day, Good Friday, Memorial Day, Fourth of July, Labor Day, Veteran's Day, Thanksgiving Day, Friday after Thanksgiving Day, Christmas Day, and Employee's Birthday shall be paid at the double time rate of pay. If a holiday falls on Sunday, the following Monday will be observed as the recognized holiday. If a holiday falls on Saturday, the preceding Friday will be observed as the recognized holiday.

JEFFERSON COUNTY
HOLIDAY SCHEDULE – BUILDING CONSTRUCTION

NO. 36: The following days are recognized as holidays: New Year's Day, Memorial Day, Independence Day, Labor Day, Thanksgiving Day and Christmas Day. If a holiday falls on a Sunday, it shall be observed on the following Monday. No work shall be performed on Labor Day except in case of jeopardy to work under construction. This rule is applied to protect Labor Day. When a holiday falls during the normal work week, Monday through Friday, it shall be counted as eight (8) hours toward the forty (40) hour week; however, no reimbursement for this eight (8) hours is to be paid the workman unless worked. An Employer working a four (4) day, ten (10) hour schedule may use Friday as a make-up day when an observed holiday occurs during the work week. Employees have the option to work that make-up day. If workmen are required to work the above enumerated holidays, or days observed as such, they shall receive double (2) the regular rate of pay for such work.

NO. 41: The following days shall be observed as legal holidays: New Year's Day, Memorial Day, Fourth of July, Labor Day, Veteran's Day, Thanksgiving Day and Christmas Day. No work shall be performed on the Fourth of July, Labor Day or Christmas Day. Any work performed on the above holidays shall be paid for at two (2) times the regular straight time rate of pay. When any of the above holidays fall on Sunday, the following Monday shall be observed as such holiday. If a holiday falls on Saturday, it shall not be considered to be observed on the previous Friday or following Monday. Such days shall be regular workdays.

NO. 45: All work performed on New Year's Day, Memorial Day, Independence Day, Labor Day, Veteran's Day, Thanksgiving Day, the day after Thanksgiving, the day before Christmas, and Christmas Day, shall be paid at the double time rate of pay.

NO. 47: The following holidays are recognized: New Year's Day, Memorial Day, Fourth of July, Labor Day, Veteran's Day, Thanksgiving Day, the day after Thanksgiving and Christmas Day. When a holiday listed above falls on Saturday, it shall be celebrated on the Friday preceding the holiday. When a holiday falls on Sunday, the following Monday shall be observed. Holidays referred to above shall be paid for at the double (2) time rate of pay when worked.

NO. 51: All time worked on Sundays and recognized holidays shall be paid for at the rate of double (2) the hourly base wage rate in effect. The Employer agrees to recognize the following holidays: New Year's Day, Memorial Day, Independence Day, Labor Day, Veteran's Day, Thanksgiving Day and Christmas Day. If the holiday falls on Sunday, it shall be recognized on the following Monday. If the holiday falls on a Saturday, it shall be recognized as a Saturday only holiday.

NO. 54: All work performed on New Year's Day, Memorial Day, Independence Day, Labor Day, Veteran's Day, Thanksgiving Day, the Friday after Thanksgiving Day, and Christmas Day shall be paid at the double (2) time rate of pay. When a holiday falls on Saturday, it shall be observed on Friday. When a holiday falls on Sunday, it shall be observed on Monday.

NO. 55: The following days are recognized as holidays: New Year's Day, Memorial Day, Independence Day, Labor Day, Thanksgiving Day and Christmas Day. If a holiday falls on a Sunday, it shall be observed on the following Monday. No work shall be performed on Labor Day except in case of jeopardy to work under construction. This rule is applied to protect Labor Day. When a holiday falls during the normal work week, Monday through Friday, it shall be counted as eight (8) hours toward the forty (40) hour week; however, no reimbursement for this eight (8) hours is to be paid the workmen unless worked. An Employer working a four (4) day, ten (10) hour schedule may use Friday as a make up day when an observed holiday occurs during the work week. Employees have the option to work that make up day. If workmen are required to work the above enumerated holidays, or days observed as such, they shall receive double (2) the regular rate of pay for such work.

NO. 60: All work performed on New Year's Day, Armistice Day (Veteran's Day), Decoration Day (Memorial Day), Independence Day (Fourth of July), Thanksgiving Day and Christmas Day shall be paid at the double time rate of pay. No work shall be performed on Labor Day except when triple (3) time is paid. When a holiday falls on Saturday, Friday will be observed as the holiday. When a holiday falls on Sunday, the following Monday shall be observed as the holiday.

JEFFERSON COUNTY
HOLIDAY SCHEDULE – BUILDING CONSTRUCTION

NO. 66: All work performed on Sundays and the following recognized holidays, or the days observed as such, of New Year's Day, Decoration Day, Fourth of July, Labor Day, Veteran's Day, Thanksgiving Day and Christmas Day, shall be paid at double (2) the hourly rate plus an amount equal to the hourly Total Indicated Fringe Benefits. Whenever any such holidays fall on a Sunday, the following Monday shall be observed as a holiday.

NO. 69: All work performed on New Year's Day, Memorial Day, July Fourth, Labor Day, Veteran's Day, Thanksgiving Day or Christmas Day shall be compensated at double (2) their straight-time hourly rate of pay. Friday after Thanksgiving and the day before Christmas are also holidays, however, if the employer chooses to work the normal work hours on these days, the employee will be paid at straight -time rate of pay. If a holiday falls on a Saturday, the holiday will be observed on Saturday; if a holiday falls on a Sunday, the holiday will be observed on the following Monday.

NO. 71: All work performed on the following recognized holidays, or days that may be celebrated as such, shall be paid at the double (2) time rate of pay: New Year's Day, Memorial Day, Independence Day, Labor Day, Veterans Day, Thanksgiving Day, Day after Thanksgiving and Christmas Day. If a holiday falls on Sunday, it shall be celebrated on Monday. If a holiday falls on Saturday, it shall be celebrated on the Friday proceeding such Saturday.

NO. 73: The following days are recognized as holidays: New Year's Day, Memorial Day, Fourth of July, Labor Day, Veteran's Day (or mutually agreed date of the Friday after Thanksgiving Day may be substituted for Veteran's Day), Thanksgiving Day and Christmas Day, or in the event that any of said Holidays falls on Sunday, then the day or days generally recognized as such. Any work performed anywhere on any of the aforesaid Holidays, or on the day or days recognized and observed as such, shall be paid for at double (2) time the regular hourly rate.

OCCUPATIONAL TITLE	* Date of Increase	Basic Hourly Rates	Over-Time Schedule	Holiday Schedule	Total Fringe Benefits
Carpenter	6/16	$36.21	23	16	$16.10
Cement Mason	6/16	$31.16	17	11	$17.95
Electrician (Outside-Line Construction\Lineman)	9/16	$43.75	9	12	$5.25 + 36%
Lineman Operator	9/16	$37.73	9	12	$5.25 + 36%
Lineman - Tree Trimmer		$25.24	32	31	$10.20 + 3%
Groundman	9/16	$29.11	9	12	$5.25 + 36%
Groundman - Tree Trimmer		$20.00	32	31	$7.89 + 3%
Laborer					
General Laborer	6/16	$29.76	2	4	$13.17
Skilled Laborer	6/16	$30.36	2	4	$13.17
Millwright	6/16	$36.21	23	16	$16.10
Operating Engineer					
Group I	6/16	$32.41	10	9	$25.13
Group II	6/16	$32.41	10	9	$25.13
Group III	6/16	$31.11	10	9	$25.13
Group IV	6/16	$27.65	10	9	$25.13
Oiler-Driver	6/16	$28.11	10	9	$25.13
Pile Driver	6/16	$36.21	23	16	$16.10
Traffic Control Service Driver		$28.775	26	25	$9.045
Truck Driver-Teamster		$30.41	25	21	$10.82

Use Heavy Construction Rates on Highway and Heavy construction in accordance with the classifications of construction work established in 8 CSR 30-3.040(3).

Use Building Construction Rates on Building construction in accordance with the classifications of construction work established in 8 CSR 30-3.040(2).

If a worker is performing work on a heavy construction project within an occupational title that is not listed on the Heavy Construction Rate Sheet, use the rate for that occupational title as shown on the Building Construction Rate sheet.

REPLACEMENT PAGE
JEFFERSON COUNTY
OVERTIME SCHEDULE - HEAVY CONSTRUCTION

FED: Minimum requirement per Fair Labor Standards Act means time and one-half (1 ½) shall be paid for all work in excess of forty (40) hours per work week.

NO. 2: Means a regular workweek shall be forty (40) hours and will start on Monday and end on Friday. The Employer shall have the option of working five 8-hour days or four 10-hour days Monday through Friday. If an Employer elects to work five 8-hour days during any workweek, hours worked more than eight (8) per day or 40 per week shall be paid at time and one-half the hourly rate Monday through Friday. If an Employer elects to work four 10-hour days in a week, work performed more than ten (10) hours per day or 40 hours per week shall be paid at time and one-half the hourly rate Monday through Friday. When working a five 8-hour day schedule and an Employer is prevented from working forty (40) hours Monday through Friday, or any part thereof, by reason of inclement weather, Saturday or any part thereof may be worked as a make-up day at the straight time rate. If an Employer is working a four 10-hour day schedule and loses a day due to inclement weather, he may work 10 hours Friday at straight time. All hours worked over the 40 hours Monday through Friday will be paid at 1 ½ overtime rate. A workday shift is to begin at the option of the Employer, between 6:00 a.m. and not later than 9:00 a.m. However, the project starting time may be advanced or delayed if required. If workmen are required to work the enumerated holidays or days observed as such or Sundays, they shall receive double (2) the regular rate of pay for such work. Overtime shall be computed at one-half (1/2) hour intervals. Shift: The Contractor may elect to work one, two or three shifts on any work. When operating on more than one shift, the shifts shall be known as the day shift, swing shift, and graveyard shift as such terms are recognized in the industry. When two shifts are worked on any operation, the shifts will consist of eight (8) or ten (10) hours exclusive of lunchtime. When three shifts are worked the first day or day shift will consist of eight (8) hours exclusive of lunchtime. The second or swing shift shall consist of seven and one-half (7 1/2) hours work for eight hours pay, exclusive of lunchtime, and the third or the graveyard shift shall consist of seven (7) hours work for eight (8) hours pay, exclusive of the lunchtime. All time in excess of normal shifts shall be considered overtime. Multiple shift (the two or three shift) operation will not be construed on the entire project if at anytime it is deemed advisable and necessary for the Employer to multiple shift a specific operation. However, no shift shall be started between midnight and six a.m. except the graveyard shift on a three-shift operation, or except in an unusual or emergency situation. If an Employer starts a shift between midnight and 6 a.m. except the graveyard shift on a three-shift operation, he shall reimburse all employees for the entire shift at the double time rate. Completion of the second shift on a two-shift operation or completion of the graveyard shift on a three-shift operation that carries over into Saturday morning, shall be at the straight time rate. Overtime shall be computed at ½ hour intervals.

NO. 9: Eight (8) hours shall constitute a work day between the hours of 7:00 a.m. and 4:30 p.m. Forty (40) hours within five (5) days, Monday through Friday inclusive, shall constitute the work week. Work performed in the 9th and 10th hour, Monday through Friday, shall be paid at time and one-half (1½) the regular straight time rate of pay. Contractor has the option to pay two (2) hours per day at the time and one-half (1½) the regular straight time rate of pay between the hours of 6:00 a.m. and 5:30 p.m., Monday through Friday. Worked performed in the first eight (8) hours on Saturday shall be paid at the rate of one and eight tenths (1.8) the regular straight time rate. Work performed outside these hours and on Sundays and recognized legal holidays, or days celebrated as such, shall be paid for at the rate of double (2) time.

REPLACEMENT PAGE
JEFFERSON COUNTY
OVERTIME SCHEDULE - HEAVY CONSTRUCTION

NO. 10: Means the regular workday for which employees shall be compensated at straight time hourly rate of pay shall, unless otherwise provided for, begin at 8:00 a.m. and end at 4:30 p.m. The regular workweek shall consist of five (5) days, Monday through Friday, beginning at 8:00 a.m. and ending at 4:30 p.m. except as may be modified. The starting time may be either advanced or delayed one hour or two hours at the discretion of the Employer. The Employer may have the option to schedule his work week from Monday through Thursday at ten (10) hours per day at the straight time rate of pay with all hours in excess of ten (10) hours in any one day to be at the applicable overtime rate. If the Employer elects to work Monday through Thursday and is stopped due to inclement weather, holidays or other conditions beyond the control of the Employer, he shall have the option to work Friday at the straight time rate of pay to complete the forty (40) hour workweek. All necessary overtime and work performed on Saturday, shall be paid at time and one-half (1½) the hourly rate, plus an amount equal to one-half (½) of the hourly Total Indicated Fringe Benefits. All work performed on Sundays and recognized holidays shall be paid at double (2) the hourly rate, plus an amount equal to the hourly Total Indicated Fringe Benefits. Shifts may be established when considered necessary by the Employer. Shift hours and rates will be as follows. If shifts are established, work on the First Shift will begin between 6:00 a.m. and 9:00 a.m. and consist of eight (8) hours of work plus one-half hour unpaid lunch. Hours worked during the first shift will be paid at the straight time rate of pay. The second shift shall start eight hours after the start of the first shift and consist of eight (8) hours of work plus one-half hour unpaid lunch. Work on the second shift will begin between 2:00 p.m. and 5:00 p.m. and be paid the straight time rate plus $2.50 per hour. The third shift shall start eight hours after the start of the second shift and consist of eight (8) hours plus one-half hour unpaid lunch. Work on the third shift will begin between 10:00 p.m. and 1:00 a.m. and be paid the straight time rate plus $3.50 per hour. The additional amounts that are to be paid are only applicable when working shifts. Shifts that begin on Saturday morning through those shifts which end on Sunday morning will be paid at time and one-half these rates. Shifts that begin on Sunday morning through those shifts which end on Monday morning will be paid at double time these rates.

NO. 17: Means eight (8) hours shall constitute the regular work day and forty (40) hours a work week, Monday through Friday. The Employer shall establish the starting time between 6:30 a.m. through 9:00 a.m. An Employer may further adjust the starting time up to 9:30 A.M. throughout the year. Time and one-half (1½) shall be paid after eight (8) consecutive hours worked after the established starting time and for hours worked before the established starting time. Time and one-half (1½) shall be paid for work performed on Saturdays. Work performed on Sundays and Holidays shall be paid at the double (2) time rate of pay. The Employer when working on Highway and Road Work may have the option to schedule the work week for his paving crew only from Monday through Thursday at ten (10) hours per day at the straight time rate of pay with all hours in excess of ten (10) hours in any one day to be at the applicable overtime rate of time and one-half (1½). If the Employer elects to work from Monday through Thursday and is stopped due to inclement weather (rain, snow, sleet falling), the Employer shall have the option to work Friday at the straight time rate of pay to complete the forty (40) hours.

NO. 23: Means the regular workweek shall start on Monday and end on Friday, except where the Employer elects to work Monday through Thursday, (10) hours per day. All work over ten (10) hours in a day or forty (40) hours in a week shall be at the overtime rate of one and one-half (1½) times the regular hourly rate. The regular workday shall be either eight (8) or ten (10) hours. If a job can't work forty (40) hours Monday through Friday because of inclement weather or other conditions beyond the control of the Employer, Friday or Saturday may be worked as a make-up day at straight time (if working 4-10's). Saturday may be worked as a make-up day at straight time (if working 5-8's). An Employer, who is working a four (4) ten (10) hour day work schedule may use Friday as a make-up day when a workday is lost due to a holiday. A workday is to begin at the option of the Employer but not later than 11:00 a.m. except when inclement weather, requirements of the owner or other conditions beyond the reasonable control of the Employer prevent work. Except as worked as a make-up day, time on Saturday shall be worked at one and one-half (1½) times the regular rate. Work performed on Sunday shall be paid at two (2) times the regular rate. Work performed on recognized holidays or days observed as such, shall also be paid at the double (2) time rate of pay. For all overtime hours worked during the week or on Saturday $15.55 of the fringe benefits portion of the prevailing wage shall be paid at time and one-half (1½). For all overtime hours worked on Sundays or recognized holidays $15.55 of the fringe benefits portion of the prevailing wage shall be paid double time. The remaining $.55 of the fringe benefit portion of the prevailing wage shall be paid at straight time.

REPLACEMENT PAGE
JEFFERSON COUNTY
OVERTIME SCHEDULE - HEAVY CONSTRUCTION

NO. 25: Means a regular work week of forty (40) hours, starting on Monday and ending on Friday. The regular work day shall be either eight (8) or ten (10) hours. If a crew is prevented from working forty (40) hours Monday through Friday, or any part thereof by reason of inclement weather, Saturday or any part thereof maybe worked as a make-up day at the straight time rate. Employees who are part of a regular crew on a make-up day, notwithstanding the fact that they may not have been employed the entire week, shall work Saturday at the straight time rate. A work day is to begin between 6:00 a.m. and 9:00 a.m. However, the project starting time maybe advanced or delayed if mutually agreed to by the interest parties. All hours worked on recognized holidays, or days observed as such, double (2) time shall be paid.

NO. 26: Means a regular work week of forty (40) hours will start on Monday and end on Friday. The regular work day shall be either eight (8) or ten (10) hours. If a crew is prevented from working forty (40) hours Monday through Friday, or any part thereof by reason of inclement weather, Saturday or any part thereof may be worked as a make-up day at the straight time rate. Employees who are part of a regular crew on a make-up day, notwithstanding the fact that they may not have been employed the entire week, shall work Saturday at the straight time rate. A workday is to begin between 6:00 a.m. and 9:00 a.m. However, the project starting time may be advanced or delayed if mutually agreed to by the interest parties. For all time worked on recognized holidays, or days observed as such, double (2) time shall be paid.

NO. 32: Means the overtime rate shall be time and one-half the regular rate for work over forty (40) hours per week. Sundays and Holidays shall be paid at double the straight time rate.

JEFFERSON COUNTY
HOLIDAY SCHEDULE – HEAVY CONSTRUCTION

NO. 4: All work performed on New Year's Day, Memorial Day, Independence Day, Labor Day, Thanksgiving Day, Christmas Day, or observed as such, shall be paid at the double time rate of pay. When a Holiday falls on a Sunday, Monday shall be observed. No work shall be performed on Labor Day, except in case of jeopardy to life or property. This is applied to protect Labor Day.

NO. 9: All work performed on Sundays and the following recognized holidays, or the days observed as such, of New Year's Day, Decoration Day, Fourth of July, Labor Day, Veteran's Day, Thanksgiving Day and Christmas Day, shall be paid at double (2) the hourly rate plus an amount equal to the hourly Total Indicated Fringe Benefits. Whenever any such holidays fall on a Sunday, the following Monday shall be observed as a holiday.

NO. 11: Means all work performed on New Year's Day, Memorial Day, Fourth of July, Labor Day, Veteran's Day, Thanksgiving Day, Christmas Day, and any additional holidays which may be mutually agreed upon shall be paid at the double (2) time rate of pay. Whenever any such holiday falls on a Sunday, the following Monday shall be recognized and observed as the holiday. No work shall be performed on Labor Day.

NO. 12: All work performed on New Year's Day, Memorial Day, Fourth of July, Labor Day, Veteran's Day, Thanksgiving Day, Christmas Day, or days celebrated as such, shall be paid at the double time rate of pay. When one of the foregoing holidays falls on Sunday, it shall be celebrated on the following Monday. When one of the foregoing holidays falls on Saturday, it shall be celebrated on the Friday before the holiday.

NO. 16: The following days are recognized as holidays: New Year's Day, Memorial Day, Fourth of July, Labor Day, Thanksgiving Day and Christmas Day. If a holiday falls on Sunday, it shall be observed on the following Monday. If a holiday falls on Saturday, it shall be observed on the preceding Friday. No work shall be performed on Labor Day except in case of jeopardy to work under construction. This rule is applied to protect Labor Day. When a holiday falls during the normal work week, Monday through Friday, it shall be counted as eight (8) hours toward the forty (40) hour week; however, no reimbursement for this eight (8) hours is to be paid to the worker unless worked. If workers are required to work the above recognized holidays or days observed as such, they shall receive double (2) the regular rate of pay for such work.

NO. 21: The following days are recognized as holidays: New Year's Day, Memorial Day, Independence Day, Labor Day, Thanksgiving Day and Christmas Day. If a holiday falls on a Sunday, it shall be observed on the following Monday. No work shall be performed on Labor Day except in case of jeopardy to work under construction. This rule is applied to protect Labor Day. When a holiday falls during the normal work week, Monday through Friday, it shall be counted as eight (8) hours toward the forty (40) hour week; however, no reimbursement for this eight (8) hours is to be paid the workman unless worked. An Employer working a four (4) day, ten (10) hour schedule may use Friday as a make-up day when an observed holiday occurs during the work week. Employees have the option to work that make-up day. If workmen are required to work the above enumerated holidays, or days observed as such, they shall receive double (2) the regular rate of pay for such work.

NO. 25: The following days are recognized as holidays: New Year's Day, Memorial Day, Independence Day, Labor Day, Thanksgiving Day and Christmas Day. If a holiday falls on a Sunday, it shall be observed on the following Monday. No work shall be performed on Labor Day except in case of jeopardy to work under construction. This rule is applied to protect Labor Day. When a holiday falls during the normal work week, Monday through Friday, it shall be counted as eight (8) hours toward the forty (40) hour week; however, no reimbursement for this eight (8) hours is to be paid the workmen unless worked. An Employer working a four (4) day, ten (10) hour schedule may use Friday as a make up day when an observed holiday occurs during the work week. Employees have the option to work that make up day. If workmen are required to work the above enumerated holidays, or days observed as such, they shall receive double (2) the regular rate of pay for such work.

NO. 31: All work performed on New Year's Day, Presidents' Day, Veterans' Day, Good Friday, Decoration Day, Fourth of July, Labor Day, Christmas Eve Day, Christmas Day, Thanksgiving Day and Day after Thanksgiving or days celebrated for the same.