STATE OF MISSOURI
JEFFERSON COUNTY PUBLIC WORKS DEPARTMENT
PLANS FOR THE PROPOSED STRUCTURE REPLACEMENT
OF
STROUP ROAD
OVER
LITTLE CREEK
STP-5403(656)
BRIDGE NO. 24700121

BID SET
April 27, 2016

JEFFERSON COUNTY
SEC 5 T40N, R5E

DESIGN DESIGNATION

LOCAL / RURAL MINOR COLLECTOR

ADT 2012 / 400	CURRENT SPEED 30 MPH
DESIGN ADT 2032 /1000	DESIGN SPEED 30 MPH
TRUCKS 5%	POSTING TO REMAIN @ 30 MPH

SYMBOL LEGEND

A/C UNIT	GRATED MANHOLE	STORM MANHOLE
BOLLARD	GUY WIRE ANCHOR	STUMP
BUSH	LANDSCAPE LIGHT	TELEPHONE PEDESTAL
CLEANOUT	LAWN SPRINKLER	TELEPHONE PULLBOX
COMBINED MANHOLE	LIGHT STANDARD	TEMPORARY CONSTRUCTION EASEMENT
CURB/AREA INLET	MONITORING WELL	TREE, DECIDUOUS
ELECTRIC MANHOLE	PARKING METER	TREE, CONIFEROUS
ELECTRIC METER	POWER POLE	TRAFFIC SIGNAL MAST ARM
ELECTRIC PEDESTAL	PROPOSED ROW	TRAFFIC SIGNAL PEDESTAL
ELECTRIC PULLBOX	ROW MARKER	UTILITY MARKER
FIRE HYDRANT	RR FLASHERS	WATER MANHOLE
GAS DRIP	SAMPLING TEE	WATER METER
GAS METER	SANITARY MANHOLE	WATER VALVE
GAS VALVE	SIGN	
GRATED INLET	SOIL BORING	

INDEX

SHEET NO.	DESCRIPTION OF SHEET
1	COVER SHEET
2	TYPICAL SECTIONS
2A	SUMMARY OF QUANTITIES
2B	SCHEDULE OF QUANTITIES
2BS	SCHEDULE OF QUANTITIES
3-4	PLAN SHEETS
5	PROFILE SHEET
6	RIGHT OF WAY SURVEY
7	COORDINATE POINTS
8	DRIVEWAY #3 LAYOUT
9	DRIVEWAY PROFILE AND PIPE SECTION
10-11	TRAFFIC CONTROL
12	EROSION CONTROL
13	ROCK BLANKET LAYOUT
14	ROCK BLANKET SECTIONS
15-52	BRIDGE DRAWINGS (24700121)
53-60	ROADWAY SECTIONS

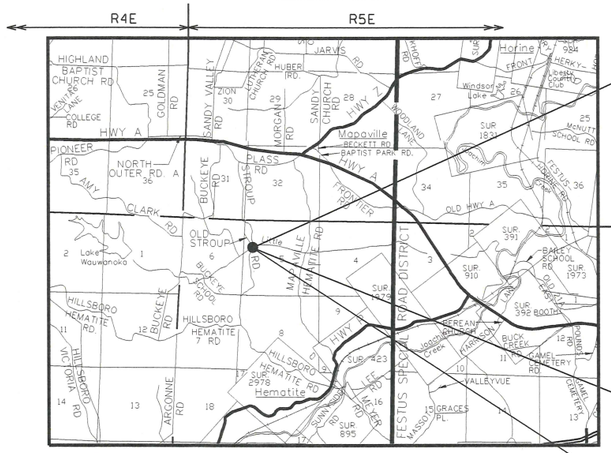

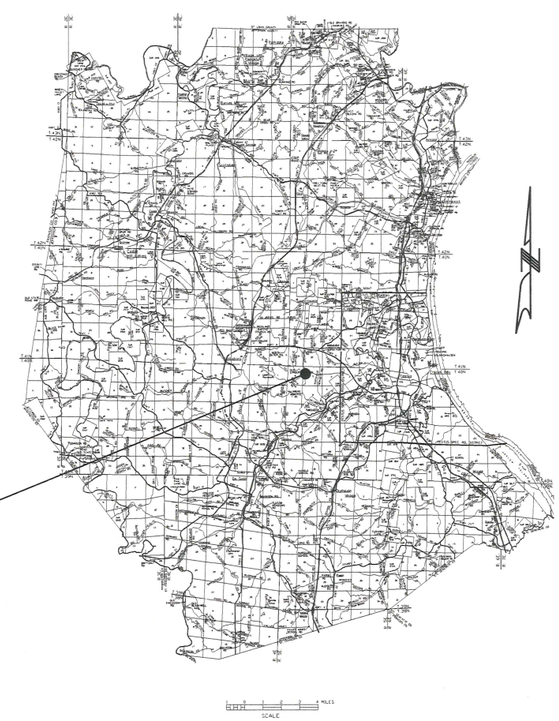

LOCATION MAP

NET PROJECT LENGTH 646.33 FEET (0.1224 MILES)

Line Legend

Proposed Right of Way
Temporay Constructin Easement — TCE
Overhead Electric
Underground Telephone — T
Slope limit — SL
Proposed Ditch

Control Benchmark:
Station JE-50, Elevation: 432.09

Site Benchmarks:(NAVD 1988)

TBM#1 - 5/8" Iron Rod with ABNA Orange Trav. Pnt. Cap. (Traverse Point 100)
12.14' Lt. Sta.-0+45.03; Elevation 490.02

TBM#2 - 5/8" Iron Rod with ABNA Orange Trav. Pnt. Cap (Traverse Point 101)
86.31' Lt. Sta. 4+92.60; Elevation 486.81

TBM #3 - 5/8" Iron Rod with ABNA Orange Trav. Pnt. Cap (Traverse Point 102)
10.01' Rt. Sta. 7+02.94: Elevation 514.84

TBM #4 - 5/8" Iron Rod with ABNA Orange Trav. Pnt. Cap (Traverse Point 103)
21.52' Rt. Sta. 9+58.74: Elevation 523.00

UTILITIES

TELEPHONE	ELECTRIC
AT&T GLENN HOGENMILLER 122 N. 2nd STREET FESTUS, MO 63026 (636) 931-7525	AMEREN U.E. MR. BILL ROSENER CONSULTING ENGINEER 6450 HIGHWAY MM HOUSE SPRINGS, MO 63051 (636) 671-6162

UTILITY LOCATION SERVICE
1-800-DIG-RITE

APPROVED FOR CONSTRUCTION

PUBLIC WORKS DIRECTOR — DATE 4/28/16

STATE OF MISSOURI — STEPHEN M. WILLMANN NUMBER E-24698 — REGISTERED PROFESSIONAL ENGINEER

DATE PREPARED	4/27/2016
STATE	MO
SHEET NO.	1
ROUTE	STROUP
COUNTY	JEFFERSON
JOB NO.	13-0079
PROJECT NO.	STP-5403 (656)
BRIDGE NO.	24700121

DESCRIPTION | DATE

IF A SEAL IS PRESENT ON THIS SHEET IT HAS BEEN ELECTRONICALLY SEALED AND DATED.

JEFFERSON COUNTY PUBLIC WORKS DEPARTMENT
P.O. BOX 100
HILLSBORO, MO 63050
(636-797-5340) PHONE
(636-797-5565) FAX

ABNA
4140 LINDELL BOULEVARD
ST. LOUIS, MO 63108
PH. 314-454-0222
CERTIFICATE/LICENSE NO. 001501

J:\2013\0079\Cadd\Roadway\B_24700121_001_Cover.dgn 9:40:44 AM 4/27/2016

SUPERELEVATION (FEET) RELATIVE TO PROFILE GRADE		
	LOCATION	LOCATION
	15' Left	15' Right
Station	ELEV (FEET)	ELEV (FEET)
1+38	Match Existing	Match Existing
1+50	-0.30	-0.30
1+75	-0.15	-0.30
2+00	+0.00	-0.30
2+25	+.015	-0.30
2+50	+0.30	-0.30
2+75	+0.30	-0.30
3+00	+0.30	-0.30
3+25	+0.30	-0.30
3+50	+0.30	-0.30
3+75	+0.30	-0.30
4+00	+0.30	-0.30
4+15.84	+0.30	-0.30
Bridge	+0.30	-0.30
5+91.07	+0.30	-0.30
6+00	+0.30	-0.30
6+25	+0.30	-0.30
6+50	+0.30	-0.30
6+75	+0.15	-0.30
7+00	+0.00	-0.30
7+25	-0.15	-0.30
7+50	-0.30	-0.30
7+75	-0.30	-0.30
7+84.33	Match Existing	Match Existing

✳ VARIES FROM 0' TO 2' FOR GUARDRAIL SECTION

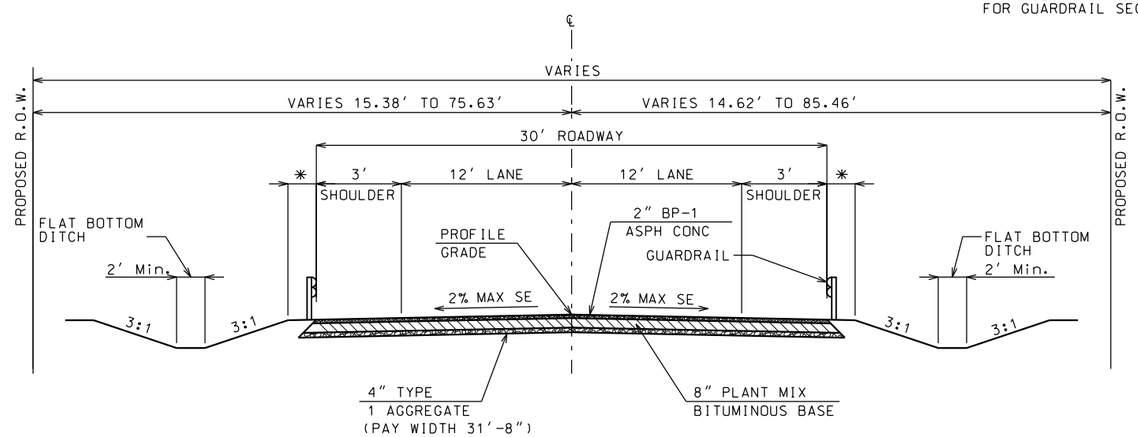

CROSS SLOPE VARIES SEE SUPERELEVATION TABLE

PROPOSED TYPICAL CROSS SECTION STROUP ROAD

STA 1+38 TO STA 3+50.56
STA 6+56.37 TO STA 7+84.33

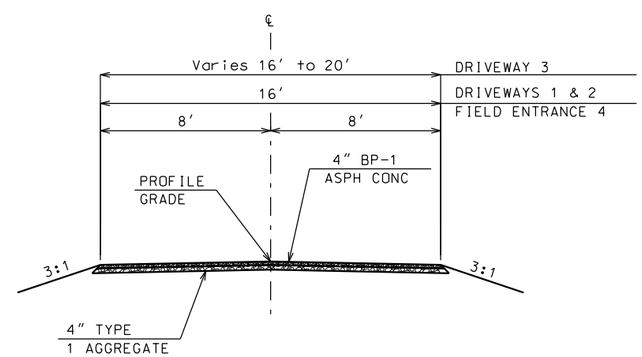

PROPOSED TYPICAL CROSS SECTION DRIVEWAY/FIELD ENTRANCE

Detailed Jan 2016
Checked Jan 2016

Note: This drawing is not to scale. Follow dimensions.

TYPICAL SECTIONS

STATE OF MISSOURI
STEPHEN M. SEEMUTH
NUMBER E-24698
REGISTERED PROFESSIONAL ENGINEER

DATE PREPARED	1/20/2016
STATE	MO
SHEET NO.	2
ROUTE	STROUP
COUNTY	JEFFERSON
JOB NO.	13-0079
PROJECT NO.	STP-5403 (656)
BRIDGE NO.	24700121

DATE	DESCRIPTION

IF A SEAL IS PRESENT ON THIS SHEET IT HAS BEEN ELECTRONICALLY SEALED AND DATED.

JEFFERSON COUNTY PUBLIC WORKS DEPARTMENT
P.O. BOX 100
HILLSBORO, MO 63050
(636-797-5340) PHONE
(636-797-5565) FAX

ABNA
4140 LINDELL BOULEVARD
ST. LOUIS, MO 63108
PH. 314-454-0222
CERTIFICATE/LICENSE NO. 001501

ESTIMATED QUANTITIES

ITEM NO.	DESCRIPTION	UNIT	QUANTITY
Roadway			
2013000	Clearing & Grubbing	ACRE	1.2
2022010	Removal of Improvements	LS	1.0
2031000	Class A Excavation	CUYD	762.0
2036000	Compacting Embankment	CUYD	762.0
2059999	Subgrade Repair	SQYD	550.0
2063000	Class 3 Excavation	CUYD	77.0
2072000	Linear Grading, Class 2	STA	4.0
2142000	Furnishing Rock Fill	CUYD	923.0
2143000	Placing Rock Fill	CUYD	923.0
3040143	Type 1 Aggregate (4" Thick)	SQYD	1946.0
4011209	Bituminous Pavement Mixture Surface (BP-1)	TON	314.2
4013000	Bituminous Pavement Mixture (Base)	TON	514.4
4071005	Tack Coat	GAL	80.0
5041000	Concrete Approach Pavement	SQYD	274.4
6061010	Guardrail Type A	LF	88.0
6061050	Guardrail Type E, 3 ft - 1.5 in spacing	LF	38.0
6062100	Bridge Anchor Section (Curb Type)	EA	3.0
6062303	Asymetrical Transition Section, 6.5 FT Post	EA	4.0
6063015	Type A Crashworthy End Terminal	EA	3.0
6119905	Riprap Bedding	SQYD	1687.0
6119907	Riprap	CUYD	1687.0
6161005	Construction Signs	SQFT	253.0
6161198	Changeable Message Sign, Contractor Furnished & Retained	EA	2.0
6181000	Mobilization	LS	1.0
6274000	Contractor Furnished Surveying and Staking	LS	1.0
7250318A	18" Pipe Group B	LF	56.0
7250324A	24" Pipe Group B	LF	37.0
7250348A	48" Pipe Group B	LF	32.0
7320018A	18" or Allowed Substitute Group B Flared End Section	EA	4.0
7320024A	24" or Allowed Substitute Group B Flared End Section	EA	2.0
7320048A	48" or Allowed Substitute Group B Flared End Section	EA	2.0
8061005	Rock Ditch Check	EA	2.0
8061019	Silt Fence	LF	1700.0

ESTIMATED QUANTITIES

ITEM NO.	DESCRIPTION	UNIT	QUANTITY
Bridge			
2061000	Class 1 Excavation	CUYD	41.0
2160500	Removal of Bridges	LS	1.0
5031010	Bridge Approach Slab (Bridge)	SQYD	166.8
7011105	Drilled Shafts (3'-6)	LF	48.0
7011204	Rock Socket (3"-0")	LF	48.0
7011300	Supplementary Television Camera Inspection	EA	6.0
7011400	Foundation Inspection Holes	LF	108.0
7011500	Concrete Coring	LF	102.0
7011600	Sonic Logging Testing	EA	6.0
7021012	Structural Steel Piles (12 in)	LF	487.0
7026000	Pre-Bore For Piling	LF	418.0
7029902	Setting Piles in Rock	EA	5.0
7032003	Class B Concrete (Substructure)	CUYD	211.6
7034213	Slab on Concrete I-Girder	SQYD	630.0
7034215	Safety Barrier Curb	LF	446.0
7056002	Type 4 (45") Prestressed Concrete I-Girder	LF	656.0
7061060	Reinforcing Steel (Bridges)	LB	31010.0
7123301	Steel Intermediate Diaphragm for P/S Concrete Girders	EA	3.0
7123610	Slab Drains	EA	7.0
7151001	Vertical Drain at End Bents	EA	2.0
7161003	Laminated Neoprene Bearing Pad (Tapered)	EA	24.0
Striping			
6206000C	4" White Acrylic Waterborne Pavement Marking Paint, Type P Beads	LF	1400.0
6206001C	4" Yellow Acrylic Waterborne Pavement Marking Paint, Type P Beads	LF	1400.0
6208065	Temporary Raised Pavement Marker, Type 2	EA	20.0
Landscaping			
8051000	Seeding	ACRE	1.5

Detailed Jan 2016
Checked Jan 2016

Note: This drawing is not to scale. Follow dimensions.

SUMMARY OF QUANTITIES

STATE OF MISSOURI
STEPHEN M. SEELE
NUMBER E-24698
REGISTERED PROFESSIONAL ENGINEER

IF A SEAL IS PRESENT ON THIS SHEET IT HAS BEEN ELECTRONICALLY SEALED AND DATED.

DATE PREPARED: 1/20/2016
STATE: MO
SHEET NO.: 2A
ROUTE: STROUP
COUNTY: JEFFERSON
JOB NO.: 13-0079
PROJECT NO.: STP-5403 (656)
BRIDGE NO.: 24700121

DATE	DESCRIPTION

JEFFERSON COUNTY PUBLIC WORKS DEPARTMENT
P.O. BOX 100
HILLSBORO, MO 63050
(636-797-5340) PHONE
(636-797-5565) FAX

ABNA
4140 LINDELL BOULEVARD
ST. LOUIS, MO 63108
PH. 314-454-0222
CERTIFICATE/LICENSE NO. 001501

J:\2013\0079\Cadd\Roadway\B_24700121_003_Summary of Quanities.dgn 1:33:43 PM 1/20/2016

CLEARING & GRUBBING = 1.2 ACRES

REMOVAL OF IMPROVEMENTS = 1 LUMP SUM

-Asphalt Pavement Sta. 1+38 to Ex. Bridge = 756 Sq Yd
-Asphalt Pavement Sta. Ex. Bridge to Sta. 7+84.33 = 733 Sq Yd
-16' - 12" Pipe Lt. Sta. 2+20
-20' - 12" Pipe Lt. Sta. 2+65
-35' - 15" Pipe Lt. Sta. 2+90
-40' - 24" Pipes Lt. Sta. 4+75
-40' - 15" Pipes Lt. Sta. 5+00
-2 Each - Load Limit Signs at Ex. Bridge
-4 Each - Panel Markers at Ex. Bridge
-4 Each - Chevron Markers
-Mail Box 10' Lt. Sta. 2+00
-Mail Box 85' Lt. Sta. 4+80

EARTH WORK SUMMARY	CUT	FILL
	CU YD	CU YD
CLASS A EXCAVATION (MAIN LINE)	762	-
COMPACTING EMBANKMENT (MAINLINE)		762
TOTALS	762	762

ADDITIONAL FILL IS REQUIRED.
IT SHALL BE PROVIDED UNDER
FURNISHING AND PLACING ROCK FILL

FURNISHING & PLACING ROCK FILL	FILL
	CU YD
MAIN LINE	923
TOTALS	923

LINEAR GRADING, CLASS 2	STA.
DRIVEWAY #1	0.2
DRIVEWAY #2	0.4
DRIVEWAY #3	3.0
FIELD ENTRANCE #4	0.4
TOTALS	4.0

SUBGRADE REPAIR = 550 SQ YD.

LOCATIONS AS DIRECTED BY THE ENGINEER.
(SEE SPECIAL PROVISIONS)

CONCRETE APPROACH PAVEMENT & BRIDGE APPROACH PAVEMENT (BRIDGE)

LOCATION	LENGTH FEET	WIDTH FEET	BRIDGE APPROACH PAVEMENT (SQ YD)	CONCRETE APPROACH PAVEMENT SQ YD
3+50.56 TO 3+91.71	41.15	30		137.2
3+91.71 TO 4+16.71	25.0	30	83.4	
5+90.22 TO 6+15.22	25.0	30	83.4	
6+15.22 TO 6+56.37	41.15	30		137.2
TOTALS			166.8	274.4

ASPHALTIC PAVEMENT & BASE

LOCATION	LENGTH FEET	WIDTH FEET	AREA SQ YD (1)	2"/4" DRIVEWAYS BP-1 TON	8" BIT. BASE TON	0.035 G/SY TACK GAL (2)	TYPE 4 AGGREGATE WIDTH	TYPE 4 AGGREGATE 4" SQ YD
1+38 TO 1+88	50.0	25.0 AVG	139	16.6	66.4	10	26.67	148
1+88 TO 3+50.56	162.56	30.0	542	64.5	258.0	40	31.67	572
6+56.37 TO 7+34.33	77.96	30.0	260	30.9	123.6	20	31.67	275
7+34.33 TO 7+84.33	50.0	25.0 AVG	139	16.6	66.4	10	26.67	148
DRIVEWAY #1	20.0	16.0	48	11.3	-	-	16.67	49
DRIVEWAY #2	40.0	16.0	83	19.9	-	-	16.67	86
DRIVEWAY #3	292.0	16.0	560	134.5	-	-	16.67	582
FIELD ENTRANCE #4	40.0	16.0	83	19.9	-	-	16.67	86
TOTALS			1854	314.2	514.4	80		1946

(1) INCLUDES TAPERS, SHOULDERS & PARKING AREA
(2) INCLUDES TACK FOR TWO LIFTS

GUARDRAIL

LOCATION	BRIDGE ANCHOR EACH	TRANS SECTION EACH	TYPE A TERMINAL EACH	TYPE A GUARDRAIL LIN FT	TYPE E GUARDRAIL LIN FT	REMARKS
NORTH APPROACH	1	1	1	-	-	
SOUTH DEPARTING	1	1	1	-	-	CONNECT TO DETACHED WING BARRIER
SOUTH APPROACH	-	1	-	88**	38*	* BEND 32' ON A 15'RADUIS CONNECT DIRECTLY TO BRIDGE SAFETY BARRIER.
NORTH DEPARTING	1	1	1	-	-	USING STD. 606.22 TERMINAL SECTION AND CONNECTION PLATES
TOTALS	3	4	3	88	38	** USE END SECTION AT END OF RAIL

EROSION/BANK PROTECTION	RIPRAP BEDDING (12 INCHES)	RIPRAP (36 INCHES)	
LOCATION	SQ YD	CU YD	
END BENT NO. 1	952	952	
END BENT NO. 4	735	735	
TOTALS	1687	1687	

MOBILIZATION = 1 LUMP SUM

CONTRACTOR FURNISHED SURVEYING AND STAKING = 1 LUMP SUM

PIPE CULVERTS

	PIPE GROUP B			FLARED END SECTION			
	18" LIN FT	24" LIN FT	48" LIN FT	18" EACH	24" EACH	48" EACH	CLASS 3 EXCAVATION CU YD
FE1 TO FE2	29	.	.	2	.	.	12
FE3 TO FE4	27	.	.	2	.	.	8
FE5 TO FE6	.	37	.	.	2	.	23
FE7 TO FE8	.	.	32	.	.	2	34
.	.	.	.	.	.	.	.
TOTALS	56	37	32	4	2	2	77

4" WHITE PAVEMENT MARKING

EDGE LINES 12' LT & RT
STA 1+00 TO STA 8+00 = 1400 LIN FT

4" YELLOW PAVEMENT MARKING

DOUBLE SOLID CENTERLINE
STA 1+00 TO STA 8+00 = 1400 LIN FT

TEMPORARY RAISED PAVEMENT MARKER, TYPE 2 = 20 EACH

TO BE USED IF ROAD IS OPENED PRIOR TO FINAL STRIPING AT 40' SPACING

SEEDING = 1.5 ACRE

Detailed Jan 2016
Checked Jan 2016

Note: This drawing is not to scale. Follow dimensions.

SUMMARY OF QUANTITIES
1 OF 2

STATE OF MISSOURI
STEPHEN M. SEELY
NUMBER E-24698
REGISTERED PROFESSIONAL ENGINEER

DATE PREPARED 1/20/2016
STATE MO | SHEET NO. 2B
ROUTE STROUP
COUNTY JEFFERSON
JOB NO. 13-0079
PROJECT NO. STP-5403 (656)
BRIDGE NO. 24700121

DESCRIPTION | DATE

IF A SEAL IS PRESENT ON THIS SHEET IT HAS BEEN ELECTRONICALLY SEALED AND DATED.

JEFFERSON COUNTY PUBLIC WORKS DEPARTMENT
P.O. BOX 100
HILLSBORO, MO 63050
(636-797-5340) PHONE
(636-797-5565) FAX

ABNA
4140 LINDELL BOULEVARD
ST. LOUIS, MO 63108
PH. 314-454-0222
CERTIFICATE/LICENSE NO. 001501

SIGN	SIZE (IN.)	AREA (SQ. FT.)	QTY	TOTAL AREA	QTY RELOC	TOTAL RELOC AREA	DESCRIPTION
WARNING SIGNS							
W01-1L	48X48	16.00					TURN (SYMBOL LEFT ARROW) WITH FLAGS
W01-1R	48X48	16.00					TURN (SYMBOL RIGHT ARROW) WITH FLAGS
W01-2L	48X48	16.00					CURVE (SYMBOL LEFT ARROW) WITH FLAGS
W01-2R	48X48	16.00					CURVE (SYMBOL RIGHT ARROW) WITH FLAGS
W01-3L	48X48	16.00					REVERSE TURN (SYMBOL LEFT ARROW) WITH FLAGS
W01-3R	48X48	16.00					REVERSE TURN (SYMBOL RIGHT ARROW) WITH FLAGS
W01-4L	48X48	16.00					REVERSE CURVE (SYMBOL LEFT ARROW) WITH FLAGS
W01-4R	48X48	16.00					REVERSE CURVE (SYMBOL RIGHT ARROW) WITH FLAGS
W01-4bL	48X48	16.00					DOUBLE ARROW REVERSE CURVE (SYMBOL LEFT ARROWS) WITH FLAGS
W01-4bR	48X48	16.00					DOUBLE ARROW REVERSE CURVE (SYMBOL RIGHT ARROWS) WITH FLAGS
W01-4cL	48X48	16.00					TRIPLE ARROW REVERSE CURVE (SYMBOL LEFT ARROWS) WITH FLAGS
W01-4cR	48X48	16.00					TRIPLE ARROW REVERSE CURVE (SYMBOL RIGHT ARROWS) WITH FLAGS
W01-6	48X24	8.00					HORIZONTAL ARROW (SYMBOL)
W01-6a	72X36	18.00					HORIZONTAL ARROW (SYMBOL ON PERMANENT BARRICADE)
W01-7	48X24	8.00					DOUBLE HEAD HORIZONTAL ARROW (SYMBOL)
W01-7a	72X36	18.00					DOUBLE HEAD HORIZONTAL ARROW (SYMBOL ON PERMANENT BARRICADE)
W01-8	18X24	3.00					CHEVRON (SYMBOL)
W01-8a	36X48	12.00					CHEVRON (SYMBOL FOR DIVIDED HIGHWAYS)
W03-1a	48X48	16.00					STOP AHEAD (SYMBOL) WITH FLAGS
W03-2a	48X48	16.00					YIELD AHEAD (SYMBOL) WITH FLAGS
W03-3	48X48	16.00					SIGNAL AHEAD (SYMBOL) WITH FLAGS
W03-4	48X48	16.00					BE PREPARED TO STOP WITH FLAGS
W03-5	48X48	16.00					SPEED LIMIT XX AHEAD (SYMBOL) WITH FLAGS
W04-1L	48X48	16.00					MERGE (SYMBOL FROM LEFT)
W04-1R	48X48	16.00					MERGE (SYMBOL FROM RIGHT)
W05-1	48X48	16.00					ROAD/BRIDGE/RAMP NARROWS WITH FLAGS
W05-3	48X48	16.00					ONE LANE BRIDGE
W05-5	48X48	16.00					NARROW LANES WITH FLAGS
W06-1	48X48	16.00					DIVIDED HIGHWAY (SYMBOL)
W06-2	48X48	16.00					DIVIDED HIGHWAY END (SYMBOL)
W06-3	48X48	16.00					TWO WAY TRAFFIC (SYMBOL) WITH FLAGS
W07-3a	30X24	5.00					NEXT XX MILES (PLAQUE)
W08-1	48X48	16.00					BUMP
W08-2	48X48	16.00					DIP
W08-3	48X48	16.00					PAVEMENT ENDS
W08-4	48X48	16.00					SOFT SHOULDER
W08-5	48X48	16.00					SLIPPERY WHEN WET (SYMBOL) WITH FLAGS
W08-6	48X48	16.00					TRUCK CROSSING WITH FLAGS
W08-6c	48X48	16.00					TRUCK ENTRANCE WITH FLAGS
W08-7	36X36	9.00					LOOSE GRAVEL
W08-9	48X48	16.00					LOW SHOULDER
W08-9a	48X48	16.00					SHOULDER DROP-OFF
W08-11	48X48	16.00					UNEVEN LANES WITH FLAGS
W08-12	36X36	9.00					NO CENTER STRIPE WITH FLAGS
W10-1	42 RND.	9.62					RAILROAD CROSSING
W012-1	24X24	4.00					DOUBLE DOWN ARROW (SYMBOL)
W012-2	48X48	16.00					LOW CLEARANCE (SYMBOL)
W012-2x	24X18	3.00					LOW CLEARANCE (PLAQUE)
W012-3a,b	144X24	24.00					OVERHEAD LOW CLEARANCE (FEET AND INCHES)
SPECIAL	120X60	50.00					LOW CLEARANCE XX FT XX IN XX MILES AHEAD
SPECIAL	120X60	50.00					WIDTH RESTRICTION XX FT XX IN XX MILES AHEAD
W013-1	30X30	6.25					ADVISORY SPEED (PLAQUE)
W016-2	30X24	5.00	4	20.0			XXX FEET (PLAQUE)
W016-3	30X24	5.00					X MILE (PLAQUE)
W020-1	48X48	16.00	2	32.0			ROAD/BRIDGE/RAMP WORK AHEAD WITH FLAGS
W020-2	48X48	16.00					DETOUR AHEAD
W020-3	48X48	16.00	7	112.0			ROAD CLOSED AHEAD WITH FLAGS
W020-4	48X48	16.00					ONE LANE ROAD AHEAD WITH FLAGS
W020-5	48X48	16.00					RIGHT/CENTER/LEFT LANE CLOSED AHEAD WITH FLAGS
W020-5a	48X48	16.00					RIGHT/CENTER/LEFT TWO LANES CLOSED AHEAD WITH FLAGS
W020-6a	48X48	16.00					RIGHT/CENTER/LEFT LANE CLOSED WITH FLAGS
W020-7a	48X48	16.00					FLAGGER (SYMBOL) WITH FLAGS
W021-2	36X36	9.00					FRESH OIL
W021-5b	48X48	16.00					SHOULDER WORK AHEAD
W022-1	48X48	16.00					BLASTING ZONE AHEAD
W022-2	42X36	10.50					TURN OFF 2-WAY RADIO AND PHONE
W022-3	42X36	10.50					END BLASTING ZONE
W022-6e	21X15	2.19					WET PAINT (ARROW PIVOTS)
GUIDE SIGNS							
SPECIAL	36X36	9.00					FRESH OIL/LOOSE GRAVEL
E05-1	36X48	12.00					GORE EXIT
E05-2	48X36	12.00					EXIT OPEN
E05-2a	48X36	12.00					EXIT CLOSED
G020-1	60X24	10.00					ROAD WORK NEXT XX MILES
G020-2	48X24	8.00	3	24.0			END ROAD WORK
G020-4	36X18	4.50					PILOT CAR FOLLOW ME
SPECIAL	42X30	8.75					PLEASE WAIT FOR PILOT CAR WITH FLAGS
G023-1	36X12	3.00					WORK ZONE (PLAQUE)
M04-8a	24X18	3.00					END DETOUR
M04-9L	48X36	12.00					DETOUR (LEFT ARROW)
M04-9R	48X36	12.00					DETOUR (RIGHT ARROW)
M04-10L	48X18	6.00					DETOUR (ARROW LEFT)
M04-10R	48X18	6.00					DETOUR (ARROW RIGHT)
REGULATORY SIGNS							
R1-1	30X30	6.25					STOP
R1-2	48 TRI.	6.93					YIELD
R1-2a	36X36	9.00					TO ONCOMING TRAFFIC (PLAQUE)
R1-3	20X9	1.25					4-WAY (PLAQUE)
R2-1	36X48	12.00					SPEED LIMIT XX WITH FLAGS
R3-1	48X48	16.00					NO RIGHT TURN (SYMBOL)
R3-2	48X48	16.00					NO LEFT TURN (SYMBOL)
R3-3	36X36	9.00					NO TURNS
R3-4	48X48	16.00					NO U-TURN (SYMBOL)
R3-7L	30X30	6.25					LEFT LANE MUST TURN LEFT
R3-7R	30X30	6.25					RIGHT LANE MUST TURN RIGHT
R4-1	36X48	12.00					DO NOT PASS
R4-2	36X48	12.00					PASS WITH CARE
R4-7aL	36X48	12.00					KEEP LEFT (HORIZONTAL ARROW)
R4-7a	36X48	12.00					KEEP RIGHT (HORIZONTAL ARROW)
R5-1	30X30	6.25					DO NOT ENTER
R5-1a	36X24	6.00					WRONG WAY
R6-1L	48X18	6.00					ONE WAY ARROW (LEFT)
R6-1R	48X18	6.00					ONE WAY ARROW (RIGHT)
R6-2L	24X30	5.00					ONE WAY (LEFT)
R6-2R	24X30	5.00					ONE WAY (RIGHT)
R10-6	24X36	6.00					STOP HERE ON RED (45° ARROW)
R11-2	48X30	10.00	4	40.0			ROAD CLOSED
R11-3a	60X30	12.50	2	25.0			ROAD CLOSED XX MILES AHEAD LOCAL TRAFFIC ONLY
R11-4	60X30	12.50					ROAD CLOSED TO THRU TRAFFIC
S4-4	36X15	3.75					WHEN FLASHING
CONST-3A	60X48	20.00					FINE SIGN WITH FLAGS
CONST-3X	56X12	4.67					SPEEDING/PASSING (PLATE)
MISCELLANEOUS SIGNS							
.	.	.	.	.			.
616-10.05 CONSTRUCTION SIGNS TOTAL				253.0			
616-10.10 RELOCATED SIGNS TOTAL							

ITEM NUMBER	TOTAL QTY	DESCRIPTION
612-20.08		IMPACT ATTENUATOR (8 SAND BARRELS)
612-20.09		IMPACT ATTENUATOR (9 SAND BARRELS)
612-20.10		IMPACT ATTENUATOR (10 SAND BARRELS)
612-20.12		IMPACT ATTENUATOR (12 SAND BARRELS)
612-20.14		IMPACT ATTENUATOR (14 SAND BARRELS)
612-20.17		IMPACT ATTENUATOR (17 SAND BARRELS)
612-20.19		IMPACT ATTENUATOR (19 SAND BARRELS)
612-20.20		REPLACEMENT SAND BARREL
612-20.30		IMPACT ATTENUATOR ARRAY (RELOCATION)
612-30.00A		TRUCK OR TRAILER MOUNTED ATTENUATOR (TMA)
616-10.07		SPEED LIMIT AND STROBE LIGHT ASSEMBLY
616-10.08		ADVANCED WARNING RAIL SYSTEM
616-10.20		CHANNELIZER (DRUM-LIKE)
616-10.22		CHANNELIZER (CONES)
616-10.24		CHANNELIZER (TRIM LINE) WITH LIGHT
616-10.25		CHANNELIZER (TRIM LINE)
616-10.26		CHANNELIZER (VERTICAL PANEL)
616-10.27		CHANNELIZER (VERTICAL PANEL) WITH LIGHT
616-10.28		CHANNELIZER
616-10.30	6	TYPE III MOVEABLE BARRICADE
616-10.31		TYPE III MOVEABLE BARRICADE WITH LIGHT
616-10.33		DIRECTION INDICATOR BARRICADE
616-10.34		DIRECTION INDICATOR BARRICADE, WITH LIGHT
616-10.40		FLASHING ARROW PANEL
616-10.47		TYPE III OBJECT MARKER
616-10.51		WARNING LIGHT, TYPE A
616-10.52	8	WARNING LIGHT, TYPE B
616-10.53		WARNING LIGHT, TYPE C
616-10.70		TUBULAR MARKER
616-10.95		RADAR SPEED ADVISORY SYSTEM
616-10.96		CHANGEABLE MESSAGE SIGN, COMMISSION FURNISHED/RETAINED
616-10.98	2	CHANGEABLE MESSAGE SIGN, CONTRACTOR FURNISHED/RETAINED
616-11.00		CHANGEABLE MESSAGE SIGN, CONTRACTOR FURNISHED/COMMISSION RETAINED
616-11.20		INSTALLING "DRIVE SMART", 48 IN. X 48 IN. SIGN
616-11.33A		INSTALLING "POINT OF PRESENCE", 96 IN. X 48 IN. SIGN
616-11.34		INSTALLING "POINT OF PRESENCE", 36 IN. X 48 IN. SIGN
617-36.00D		CONTRACTOR FURNISHED/RETAINED TEMPORARY TRAFFIC BARRIER
617-36.02B		CONTRACTOR FURNISHED/COMMISSION RETAINED TEMPORARY TRAFFIC BARRIER
617-40.00A		TEMPORARY TRAFFIC BARRIER HEIGHT TRANSITION
617-50.10A		RELOCATING TEMPORARY TRAFFIC BARRIER
617-60.00B		COMMISSION FURNISHED/RETAINED TEMPORARY TRAFFIC BARRIER
617-70.00B		COMMISSION FURNISHED/RETAINED TEMPORARY TRAFFIC BARRIER HEIGHT TRANSITION
620-80.65		TEMPORARY RAISED PAVEMENT MARKER
901-94.00		TEMPORARY LIGHTING
902-94.00		TEMPORARY TRAFFIC SIGNALS
902-94.01		TEMPORARY TRAFFIC SIGNALS AND LIGHTING

STATE OF MISSOURI
STEPHEN M. SEELE
NUMBER E-24698
REGISTERED PROFESSIONAL ENGINEER

DATE PREPARED 1/20/2016

STATE MO | SHEET NO. 2BS

ROUTE STROUP

COUNTY JEFFERSON

JOB NO. 13-0079

PROJECT NO. STP-5403 (656)

BRIDGE NO. 24700121

DATE	DESCRIPTION

JEFFERSON COUNTY PUBLIC WORKS DEPARTMENT
P.O. BOX 100
HILLSBORO, MO 63050
(636-797-5340) PHONE
(636-797-5565) FAX

ABNA
4140 LINDELL BOULEVARD
ST. LOUIS, MO 63108
PH. 314-454-0222
CERTIFICATE/LICENSE NO. 001501

IF A SEAL IS PRESENT ON THIS SHEET IT HAS BEEN ELECTRONICALLY SEALED AND DATED.

SCHEDULE OF QUANTITIES
2 OF 2

Detailed Jan 2016
Checked Jan 2016

Note: This drawing is not to scale. Follow dimensions.

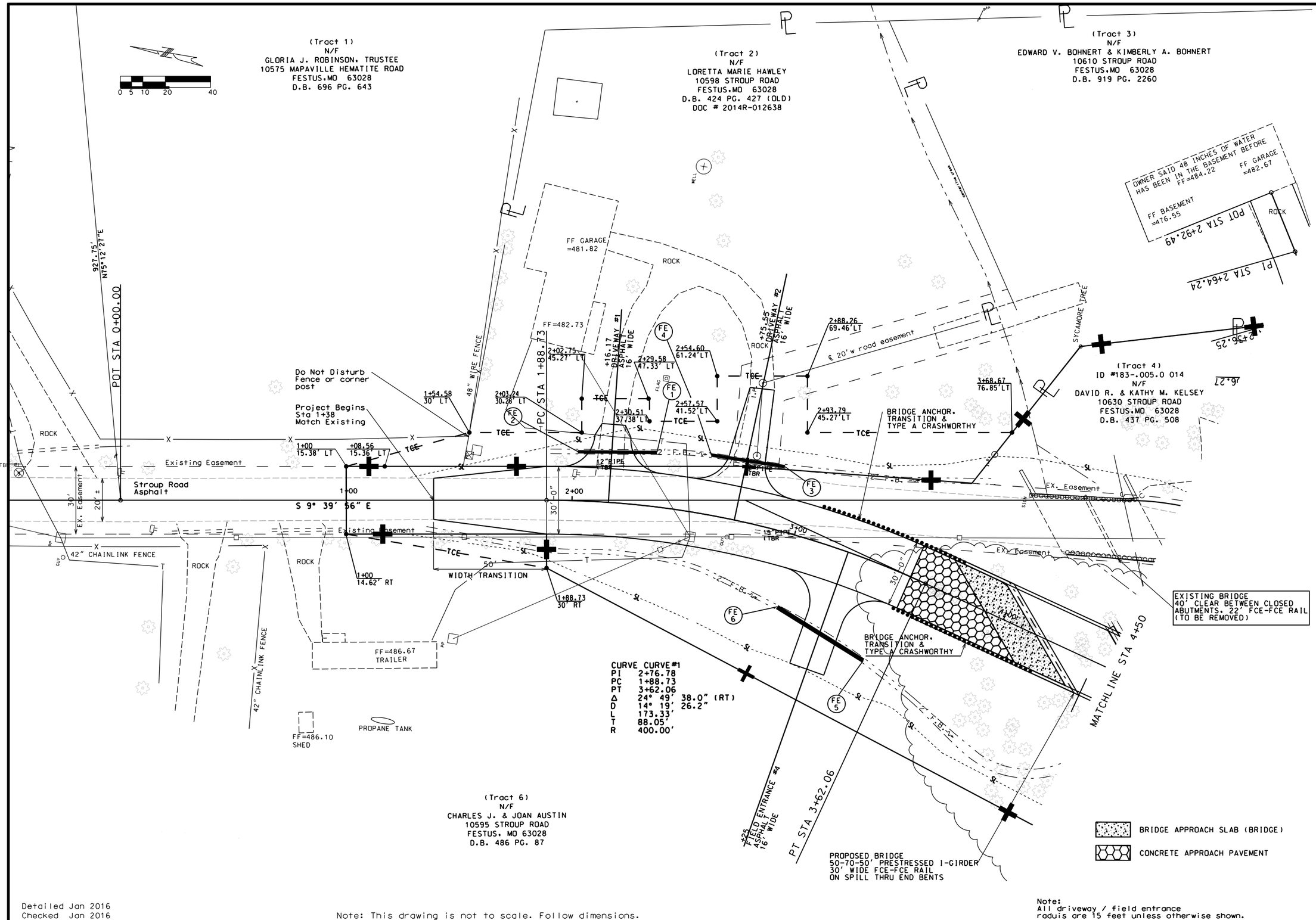

CURVE CURVE #1

PI	2+76.78
PC	1+88.73
PT	3+62.06
Δ	24° 49' 38.0" (RT)
D	14° 19' 26.2"
L	173.33'
T	88.05'
R	400.00'

Note:
All driveway / field entrance
raduis are 15 feet unless otherwise shown.

Detailed Jan 2016
Checked Jan 2016

Note: This drawing is not to scale. Follow dimensions.

STATE OF MISSOURI
STEPHEN M. SCHUPP
NUMBER E-24698
REGISTERED PROFESSIONAL ENGINEER

DATE PREPARED	1/20/2016
STATE	MO
SHEET NO.	3
ROUTE	STROUP
COUNTY	JEFFERSON
JOB NO.	13-0079
PROJECT NO.	STP-5403 (656)
BRIDGE NO.	24700121

DATE	DESCRIPTION

JEFFERSON COUNTY PUBLIC WORKS
DEPARTMENT

P.O. BOX 100
HILLSBORO, MO 63050
(636-797-5340) PHONE
(636-797-5565) FAX

ABNA
4140 LINDELL BOULEVARD
ST. LOUIS, MO 63108
PH. 314-454-0222
CERTIFICATE/LICENSE NO. 001501

IF A SEAL IS PRESENT ON THIS SHEET IT HAS BEEN ELECTRONICALLY SEALED AND DATED.

J:\2013\0079\Cadd\Roadway\stroupdesign_Plan & Profile.dgn 2:16:59 PM 1/20/2016

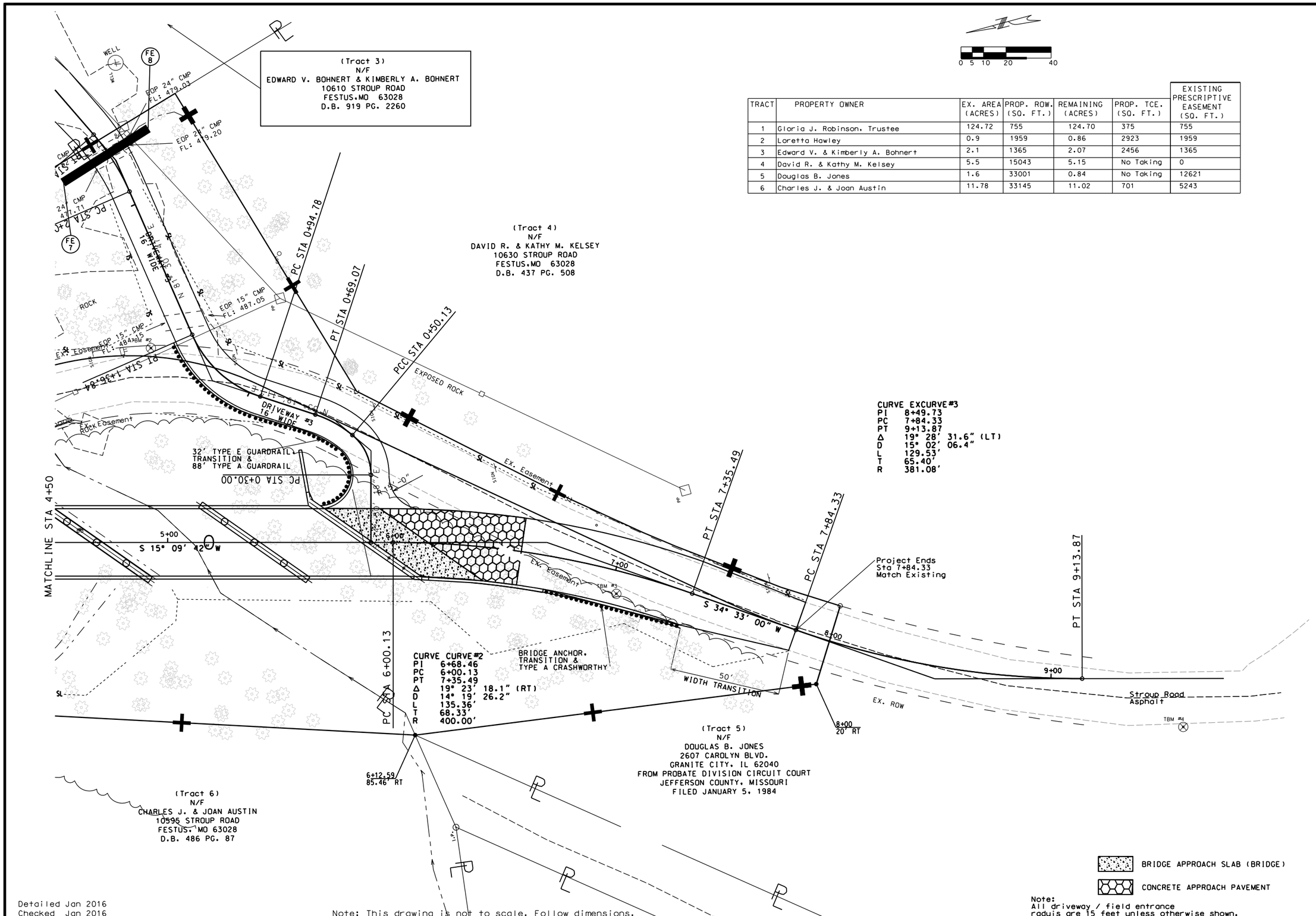

TRACT	PROPERTY OWNER	EX. AREA (ACRES)	PROP. ROW. (SQ. FT.)	REMAINING (ACRES)	PROP. TCE. (SQ. FT.)	EXISTING PRESCRIPTIVE EASEMENT (SQ. FT.)
1	Gloria J. Robinson, Trustee	124.72	755	124.70	375	755
2	Loretta Hawley	0.9	1959	0.86	2923	1959
3	Edward V. & Kimberly A. Bohnert	2.1	1365	2.07	2456	1365
4	David R. & Kathy M. Kelsey	5.5	15043	5.15	No Taking	0
5	Douglas B. Jones	1.6	33001	0.84	No Taking	12621
6	Charles J. & Joan Austin	11.78	33145	11.02	701	5243

Note: This drawing is not to scale. Follow dimensions.

Note:
All driveway / field entrance
raduis are 15 feet unless otherwise shown.

Detailed Jan 2016
Checked Jan 2016

STATE OF MISSOURI
STEPHEN M. SEIDEL
NUMBER E-24698
REGISTERED PROFESSIONAL ENGINEER

IF A SEAL IS PRESENT ON THIS SHEET IT HAS BEEN ELECTRONICALLY SEALED AND DATED.

DATE PREPARED
1/20/2016

STATE MO | SHEET NO. 4

ROUTE
STROUP

COUNTY
JEFFERSON

JOB NO.
13-0079

PROJECT NO.
STP-5403 (656)

BRIDGE NO.
24700121

DESCRIPTION

DATE

JEFFERSON COUNTY PUBLIC WORKS
DEPARTMENT

P.O. BOX 100
HILLSBORO, MO 63050
(636-797-5340) PHONE
(636-797-5565) FAX

XABNA
4140 LINDELL BOULEVARD
ST. LOUIS, MO 63108
PH. 314-454-0222
CERTIFICATE/LICENSE NO. 001501

J:\2013\0079\Cadd\Roadway\stroupdesign_Plan & Profile.dgn 2:17:44 PM 1/20/2016

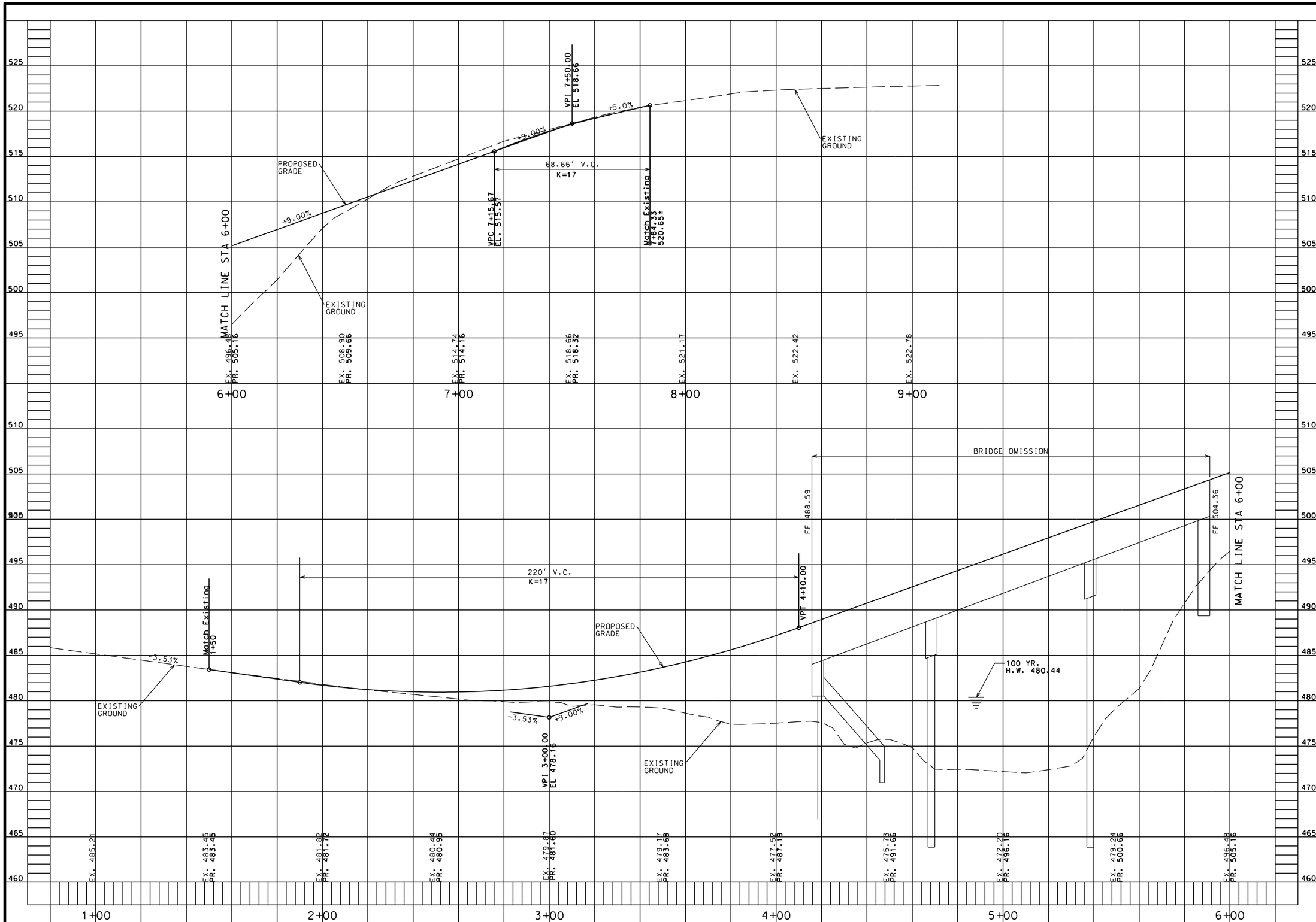

STATE OF MISSOURI
STEPHEN L. SCHOW
NUMBER E-24698
REGISTERED PROFESSIONAL ENGINEER

DATE PREPARED	1/20/2016
STATE	MO
SHEET NO.	5
ROUTE	STROUP
COUNTY	JEFFERSON
JOB NO.	13-0079
PROJECT NO.	STP-5403 (656)
BRIDGE NO.	24700121

DATE	DESCRIPTION

JEFFERSON COUNTY PUBLIC WORKS
DEPARTMENT

P.O. BOX 100
HILLSBORO, MO 63050
(636-797-5340) PHONE
(636-797-5565) FAX

ABNA
4140 LINDELL BOULEVARD
ST. LOUIS, MO 63108
PH. 314-454-0222
CERTIFICATE/LICENSE NO. 001501

IF A SEAL IS PRESENT ON THIS SHEET IT HAS BEEN ELECTRONICALLY SEALED AND DATED.

J:\2013\0079\Cadd\Roadway\Stroup_Profile.dgn 2:13:43 PM 1/20/2016

MAINLINE STROUP ROAD LAYOUT COORDINATES

Point Description	North	East
Control Point TRP-100	872,614.59	820,0558.37
Control Point TRP-101	872,061.82	820,626.49
Control Point TRP-102	871890.81	820,467.25
P.O.T. Sta. 0+00	872,568.21	820,553.88
P.C. Sta. 1+88.73 CUR#1	872,382.16	820,585.57
P.I. Sta. 2+76.78 CUR#1	872,295.37	820,600.35
P.T. Sta. 3+3+62.06 CUR#1	872,210.39	820,577.33
P.C. Sta. 6+00.13 CUR#2	871,980.60	820,515.06
P.I. Sta. 6+68.46 CUR#2	871,914.65	820,497.19
P.T. Sta. 7+34.49 CUR#2	871,858.37	820,458.44
P.C. Sta. 7+84.33 CUR#3	871,818.14	820,430.74
P.I. Sta. 8+49.73 CUR#3	871,764.27	820,393.65
P.T. Sta. 9+13.87 CUR#3	871,701.12	820,376.64

DRIVEWAY LAYOUT COORDINATES

Point Description	North	East
Driveway #1 ℄ Stroup 2+16.17	872,354.98	820,589.25
Driveway #1 34.61′ Lt. 2+16.17	872,358.44	820,623.68
Driveway #2 ℄ Stroup 2+72.55	872,298.67	820,590.92
Driveway #2 59.43′ Lt. 2+72.55	872,296.24	820,650.30
Field Entrance #4 ℄ Stroup 3+25.00	872,246.55	820,585.35
Field Entrance #4 55′ Rt. 3+25.00	872,255.96	820,531.16
P.O.T. Sta. 0+00 Driveway #3 = ℄ Stroup 5+90.31	871,990.08	820,517.63
DW#3 P.C Sta. 0+30 Curve DW301C1	871,982.24	820,546.59
DW#3 P.I. Sta. 0+40.76 Curve DW301C1	871,988.88	820,581.64
DW#3 P.T. Sta. 0+50.13 Curve DW301C1 / P.C. Curve DW301C2	871,985.59	820,565.79
DW#3 P.I. Sta. 0+59.71 Curve DW301C2	871,991.08	820,573.64
DW#3 P.T. Sta. 0+69.07 Curve DW301C2	871,999.09	820,578.91
DW#3 P.C. Sta. 0+94.78 Curve DW301C3	872,020.58	820,593.03
DW#3 P.I. Sta. 1+17.15 Curve DW301C3	872,039.27	820,605.32
DW#3 P.T. Sta. 1+36.84 Curve DW301C3	872,042.57	820,042.57
DW#3 P.C. Sta. 2+06.27 Curve DW301C4	872,052.82	820,696.10
DW#3 P.I. Sta. 2+21.37 Curve DW301C4	872,055.04	820,711.04
DW#3 P.T. Sta. 2+36.25 Curve DW301C4	872,061.58	820,724.65
DW#3 P.I. (Angle point) Sta. 2+64.24	872,073.71	820,749.88
DW#3 P.O.T. Sta. 2+92.49	872,088.56	820,773.92
.	.	.

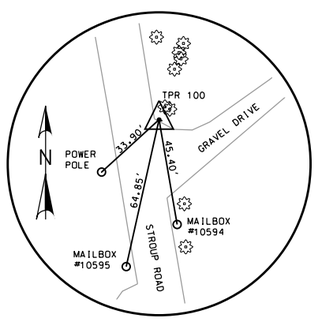

TPR-100

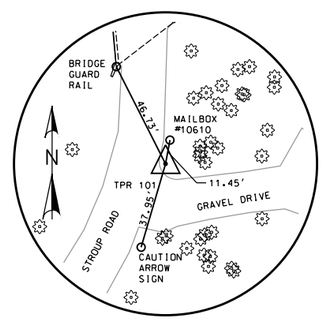

TPR-101

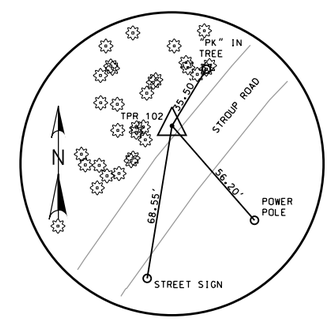

TPR-102

Detailed Jan 2016
Checked Jan 2016

Note: This drawing is not to scale. Follow dimensions.

STATE OF MISSOURI
STEPHEN M. SEELY
NUMBER E-24698
REGISTERED PROFESSIONAL ENGINEER

DATE PREPARED 1/20/2016
STATE MO
SHEET NO. 7
ROUTE STROUP
COUNTY JEFFERSON
JOB NO. 13-0079
PROJECT NO. STP-5403 (656)
BRIDGE NO. 24700121

DATE	DESCRIPTION

IF A SEAL IS PRESENT ON THIS SHEET IT HAS BEEN ELECTRONICALLY SEALED AND DATED.

JEFFERSON COUNTY PUBLIC WORKS DEPARTMENT
P.O. BOX 100
HILLSBORO, MO 63050
(636-797-5340) PHONE
(636-797-5565) FAX

ABNA
4140 LINDELL BOULEVARD
ST. LOUIS, MO 63108
PH. 314-454-0222
CERTIFICATE/LICENSE NO. 001501

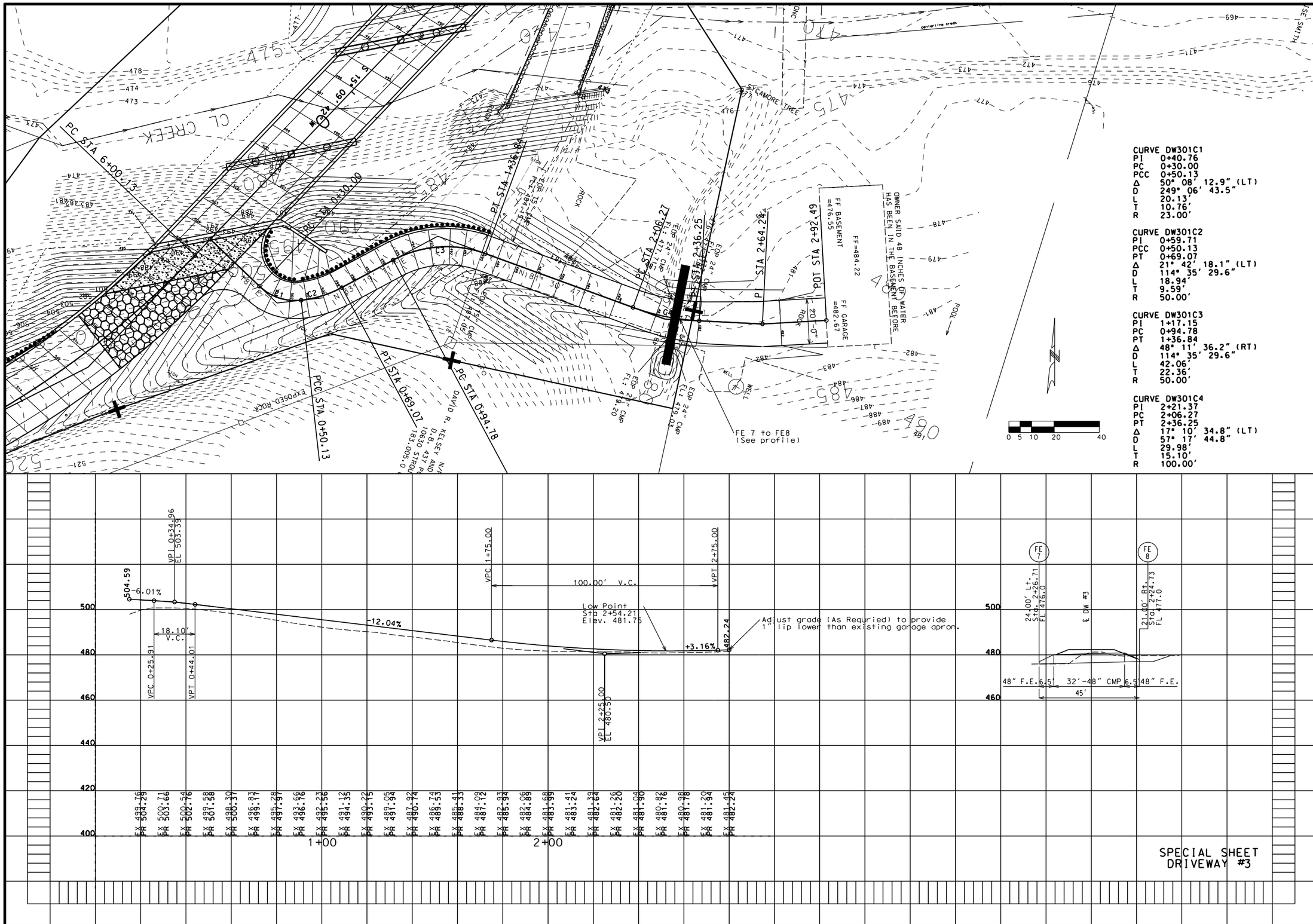

CURVE DW301C1
PI 0+40.76
PC 0+30.00
PCC 0+50.13
Δ 50° 08' 12.9" (LT)
D 249° 06' 43.5"
L 20.13'
T 10.76'
R 23.00'

CURVE DW301C2
PI 0+59.71
PCC 0+50.13
PT 0+69.07
Δ 21° 42' 18.1" (LT)
D 114° 35' 29.6"
L 18.94'
T 9.59'
R 50.00'

CURVE DW301C3
PI 1+17.15
PC 0+94.78
PT 1+36.84
Δ 48° 11' 36.2" (RT)
D 114° 35' 29.6"
L 42.06'
T 22.36'
R 50.00'

CURVE DW301C4
PI 2+21.37
PC 2+06.27
PT 2+36.25
Δ 17° 10' 34.8" (LT)
D 57° 17' 44.8"
L 29.98'
T 15.10'
R 100.00'

STATE OF MISSOURI
STEPHEN M. SEELY
NUMBER E-24698
REGISTERED PROFESSIONAL ENGINEER

DATE PREPARED	
1/20/2016	
STATE	SHEET NO.
MO	8
ROUTE	
STROUP	
COUNTY	
JEFFERSON	
JOB NO.	
13-0079	
PROJECT NO.	
STP-5403 (656)	
BRIDGE NO.	
24700121	

DATE	DESCRIPTION

IF A SEAL IS PRESENT ON THIS SHEET IT HAS BEEN ELECTRONICALLY SEALED AND DATED.

JEFFERSON COUNTY PUBLIC WORKS DEPARTMENT
P.O. BOX 100
HILLSBORO, MO 63050
(636-797-5340) PHONE
(636-797-5565) FAX

ABNA
4140 LINDELL BOULEVARD
ST. LOUIS, MO 63108
PH. 314-454-0222
CERTIFICATE/LICENSE NO. 001501

J:\2013\0079\Cadd\Roadway\Stroup Driveways.dgn 2:00:22 PM 1/20/2016

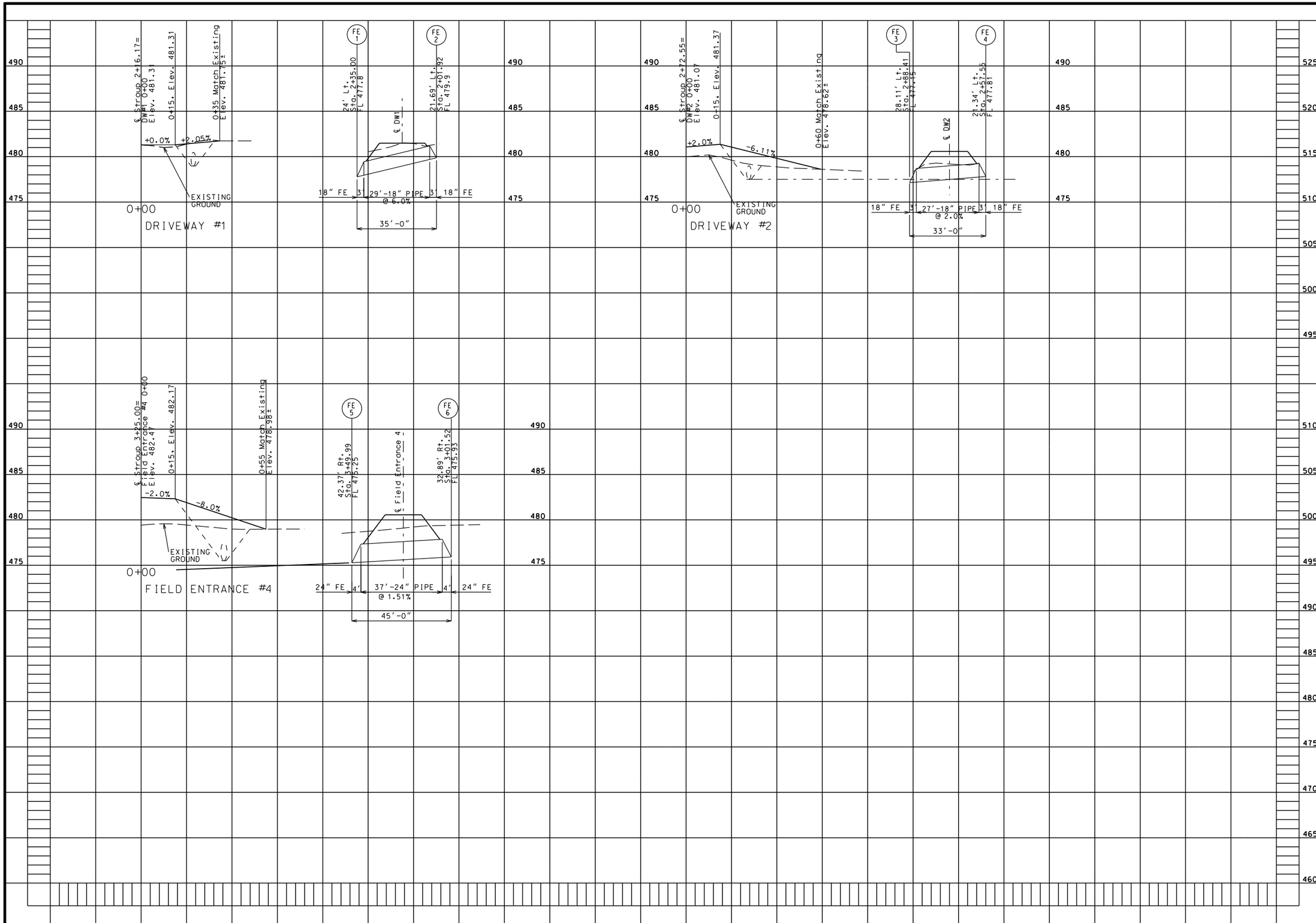

STATE OF MISSOURI
STEPHEN M. SOWDER
NUMBER E-24698
REGISTERED PROFESSIONAL ENGINEER

DATE PREPARED	1/20/2016
STATE	MO
SHEET NO.	9
ROUTE	STROUP
COUNTY	JEFFERSON
JOB NO.	13-0079
PROJECT NO.	STP-5403 (656)
BRIDGE NO.	24700121

DATE	DESCRIPTION

IF A SEAL IS PRESENT ON THIS SHEET IT HAS BEEN ELECTRONICALLY SEALED AND DATED.

JEFFERSON COUNTY PUBLIC WORKS
DEPARTMENT

P.O. BOX 100
HILLSBORO, MO 63050
(636-797-5340) PHONE
(636-797-5565) FAX

ABNA
4140 LINDELL BOULEVARD
ST. LOUIS, MO 63108
PH. 314-454-0222
CERTIFICATE/LICENSE NO. 001501

NOTE:
ACCESS TO ADJACENT PROPERTIES
SHALL BE MAINTAINED DURING CONSTRUCTION

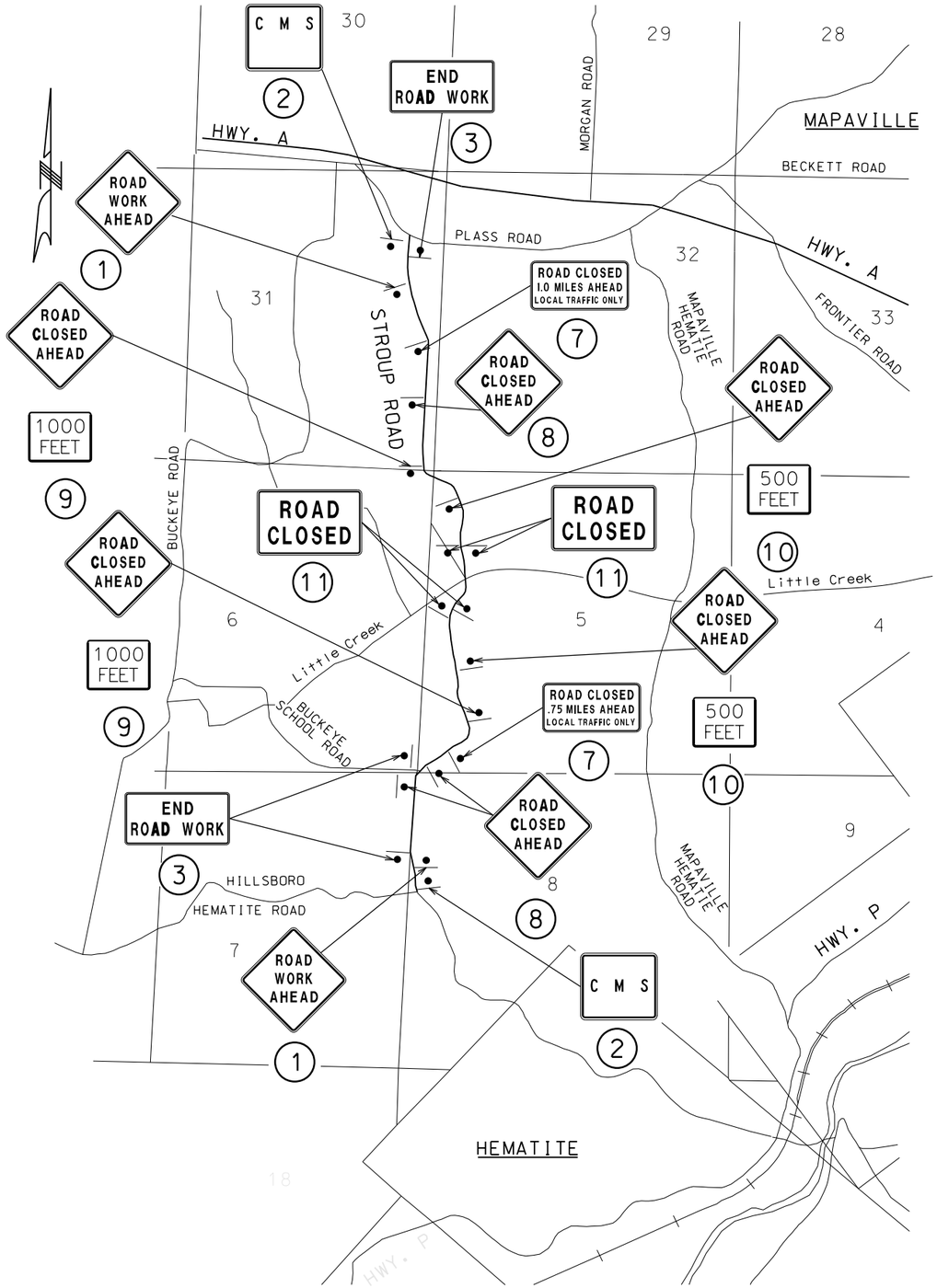

SIGNING (ROAD CLOSED)

TRAFFIC CONTROL
1 OF 2

Detailed Jan 2016
Checked Jan 2016

Note: This drawing is not to scale. Follow dimensions.

STATE OF MISSOURI
STEPHEN M. SEELY
NUMBER E-24698
REGISTERED PROFESSIONAL ENGINEER

DATE PREPARED	1/20/2016
STATE	MO
SHEET NO.	10
ROUTE	STROUP
COUNTY	JEFFERSON
JOB NO.	13-0079
PROJECT NO.	STP-5403 (656)
BRIDGE NO.	24700121

DATE	DESCRIPTION

JEFFERSON COUNTY PUBLIC WORKS DEPARTMENT
P.O. BOX 100
HILLSBORO, MO 63050
(636-797-5340) PHONE
(636-797-5565) FAX

ABNA
4140 LINDELL BOULEVARD
ST. LOUIS, MO 63108
PH. 314-454-0222
CERTIFICATE/LICENSE NO. 001501

IF A SEAL IS PRESENT ON THIS SHEET IT HAS BEEN ELECTRONICALLY SEALED AND DATED.

J:\2013\0079\Cadd\Roadway\B_24700121_000_Traffic Control1.dgn 1:15:33 PM 1/20/2016

W020-1

1

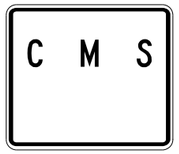

CHANGABLE
MESSAGE
SIGN

2

G020-2

3

NOT USED

4

NOT USED

5

NOT USED

6

R11-3a

7

W020-3

8

W020-3

W016-2

9

W020-3

W016-2

10

R11-2

11

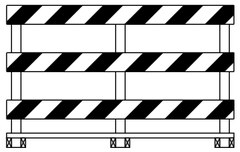

TYPE III
MOVEABLE BARRICADE

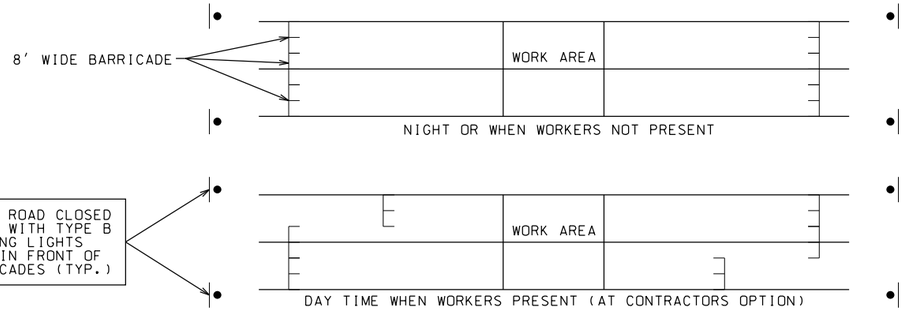

BARRICADE PLACEMENT

NOTES:

1. ALL CONSTRUCTION SIGNS SHALL BE NON-PORTABLE MOUNTED 48 HOURS PRIOR TO ROAD CLOSURE.
2. TYPE III BARRICADES SHALL EXTEND FROM SHOULDER TO SHOULDER.
3. CONTRACTOR IS RESPONSIBLE FOR UTILITY LOCATES PRIOR TO PLACING SIGN POSTS.

Detailed Jan 2016
Checked Jan 2016

Note: This drawing is not to scale. Follow dimensions.

TRAFFIC CONTROL
2 OF 2

STATE OF MISSOURI
STEPHEN M. SEIDEN
NUMBER
E-24698
REGISTERED PROFESSIONAL ENGINEER

DATE PREPARED	1/20/2016
STATE	MO
SHEET NO.	11
ROUTE	STROUP
COUNTY	JEFFERSON
JOB NO.	13-0079
PROJECT NO.	STP-5403 (656)
BRIDGE NO.	24700121

DATE	DESCRIPTION

IF A SEAL IS PRESENT ON THIS SHEET IT HAS BEEN ELECTRONICALLY SEALED AND DATED.

JEFFERSON COUNTY PUBLIC WORKS
DEPARTMENT
P.O. BOX 100
HILLSBORO, MO 63050
(636-797-5340) PHONE
(636-797-5565) FAX

ABNA
4140 LINDELL BOULEVARD
ST. LOUIS, MO 63108
PH. 314-454-0222
CERTIFICATE/LICENSE NO. 001501

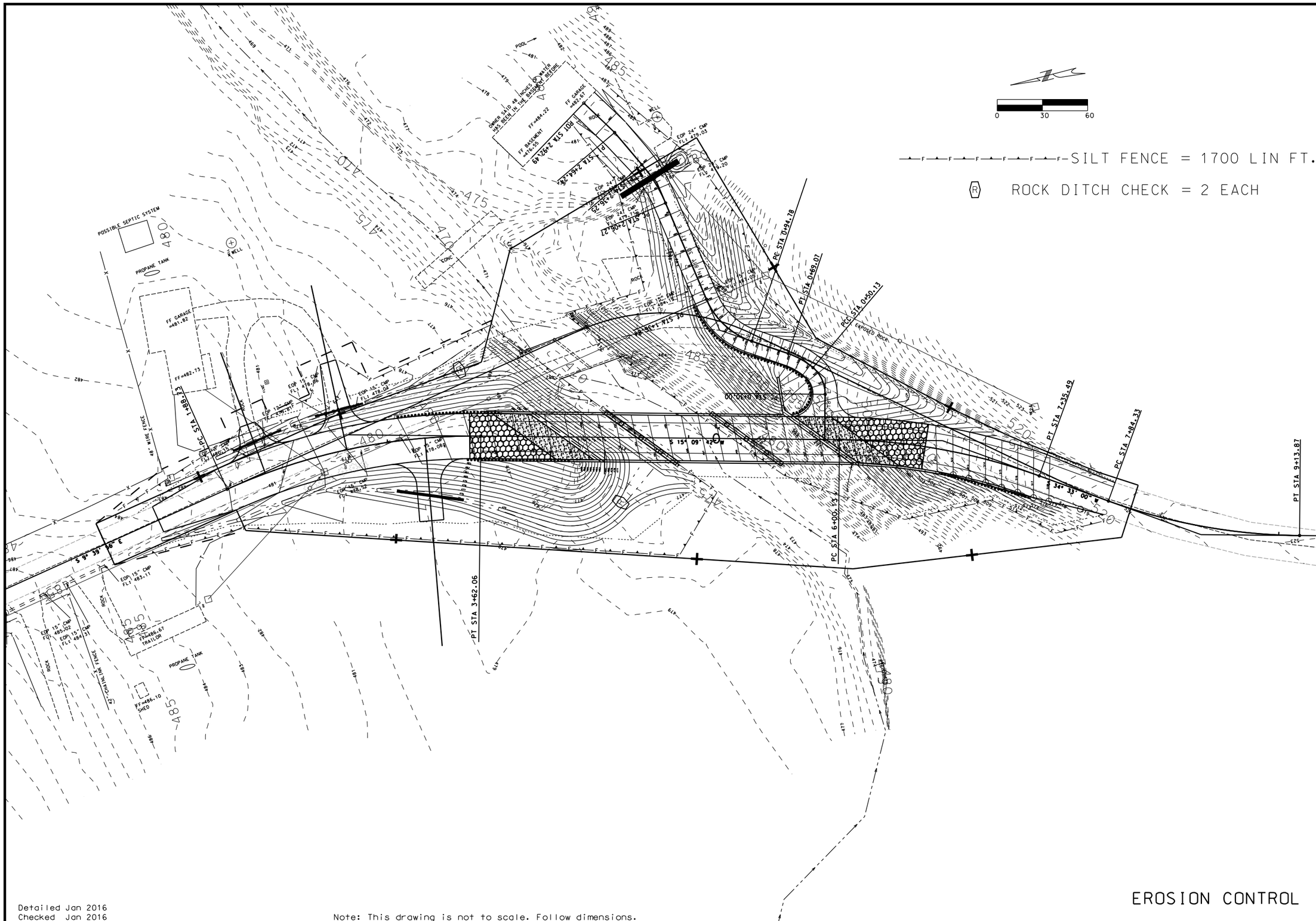

Detailed Jan 2016
Checked Jan 2016

Note: This drawing is not to scale. Follow dimensions.

EROSION CONTROL

STATE OF MISSOURI
STEPHEN M. SEIDER
NUMBER E-24698
REGISTERED PROFESSIONAL ENGINEER

DATE PREPARED	1/20/2016
STATE	MO
SHEET NO.	12
ROUTE	STROUP
COUNTY	JEFFERSON
JOB NO.	13-0079
PROJECT NO.	STP-5403 (656)
BRIDGE NO.	24700121

DATE	DESCRIPTION

IF A SEAL IS PRESENT ON THIS SHEET IT HAS BEEN ELECTRONICALLY SEALED AND DATED.

JEFFERSON COUNTY PUBLIC WORKS
DEPARTMENT
P.O. BOX 100
HILLSBORO, MO 63050
(636-797-5340) PHONE
(636-797-5565) FAX

ABNA
4140 LINDELL BOULEVARD
ST. LOUIS, MO 63108
PH. 314-454-0222
CERTIFICATE/LICENSE NO. 001501

J:\2013\0079\Cadd\Roadway\Grading-Erosion Control..dgn 1:47:33 PM 1/20/2016

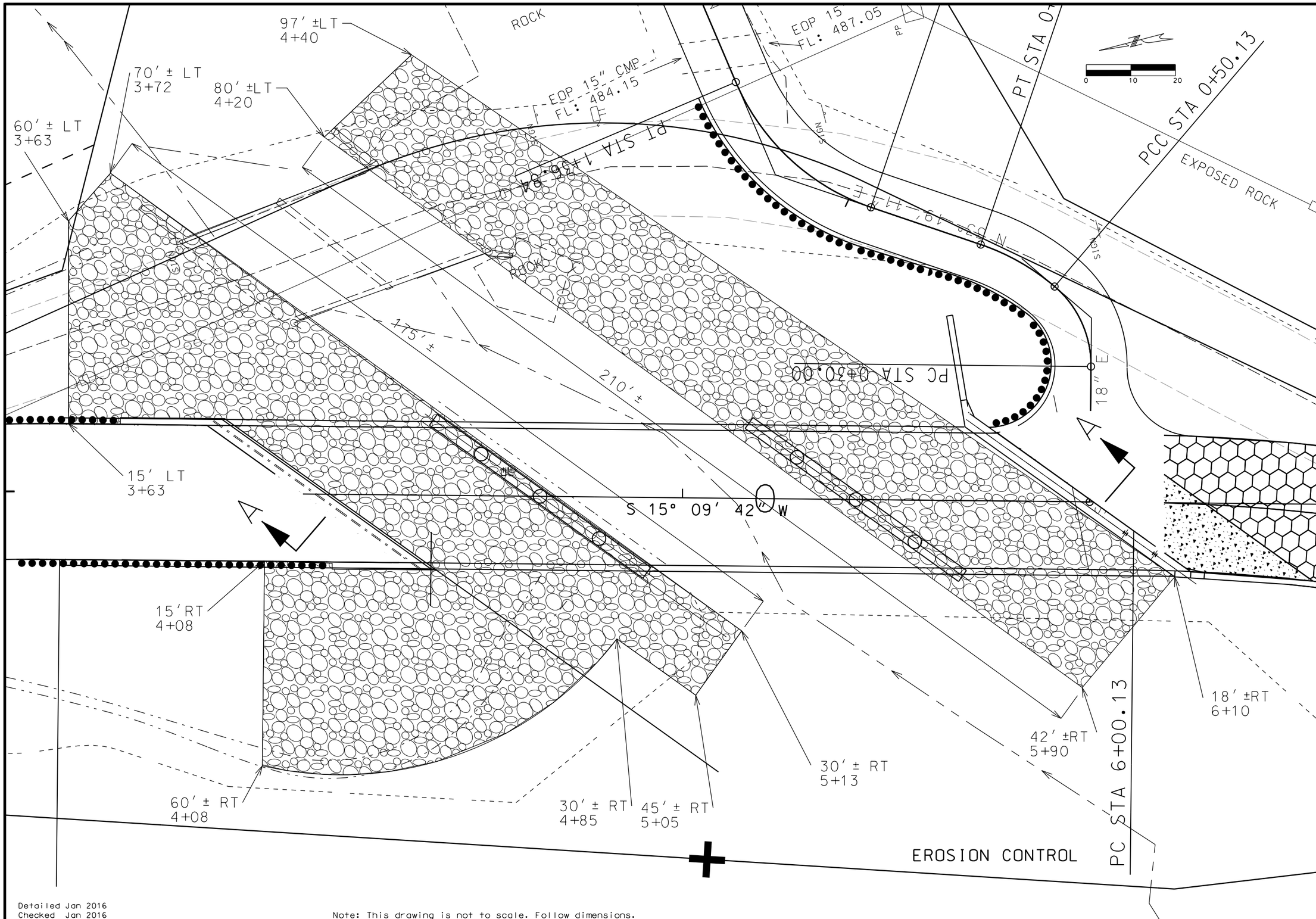

Detailed Jan 2016
Checked Jan 2016

Note: This drawing is not to scale. Follow dimensions.

STATE OF MISSOURI
STEPHEN M. SEIDEL
NUMBER
E-24698
REGISTERED PROFESSIONAL ENGINEER

DATE PREPARED	4/11/2016
STATE	MO
SHEET NO.	13
ROUTE	STROUP
COUNTY	JEFFERSON
JOB NO.	13-0079
PROJECT NO.	STP-5403 (656)
BRIDGE NO.	24700121

DESCRIPTION	DATE

IF A SEAL IS PRESENT ON THIS SHEET IT HAS BEEN ELECTRONICALLY SEALED AND DATED.

JEFFERSON COUNTY PUBLIC WORKS
DEPARTMENT

P.O. BOX 100
HILLSBORO, MO 63050
(636-797-5340) PHONE
(636-797-5565) FAX

ABNA
4140 LINDELL BOULEVARD
ST. LOUIS, MO 63108
PH. 314-454-0222
CERTIFICATE/LICENSE NO. 001501

J:\2013\0079\Cadd\Roadway\Grading-Erosion Control..dgn 2:08:28 PM 4/11/2016

RIPRAP GRADATIONS

GRAD NO.	PERCENT PASSING ROCK SIZE (LBS)									
	1000	600	400	300	170	150	90	50	40	12
RR 7	100	.	.	50 ±20	.	.	.	.	.	8 ±8

BEDDING MATERIAL GRADATIONS

GRAD NO.	PERCENT PASSING SIEVES				
	4 IN	3 IN	2 IN	1 ½ IN	NO. 4
RR 2	100	.	53 ±23	.	8 ±8

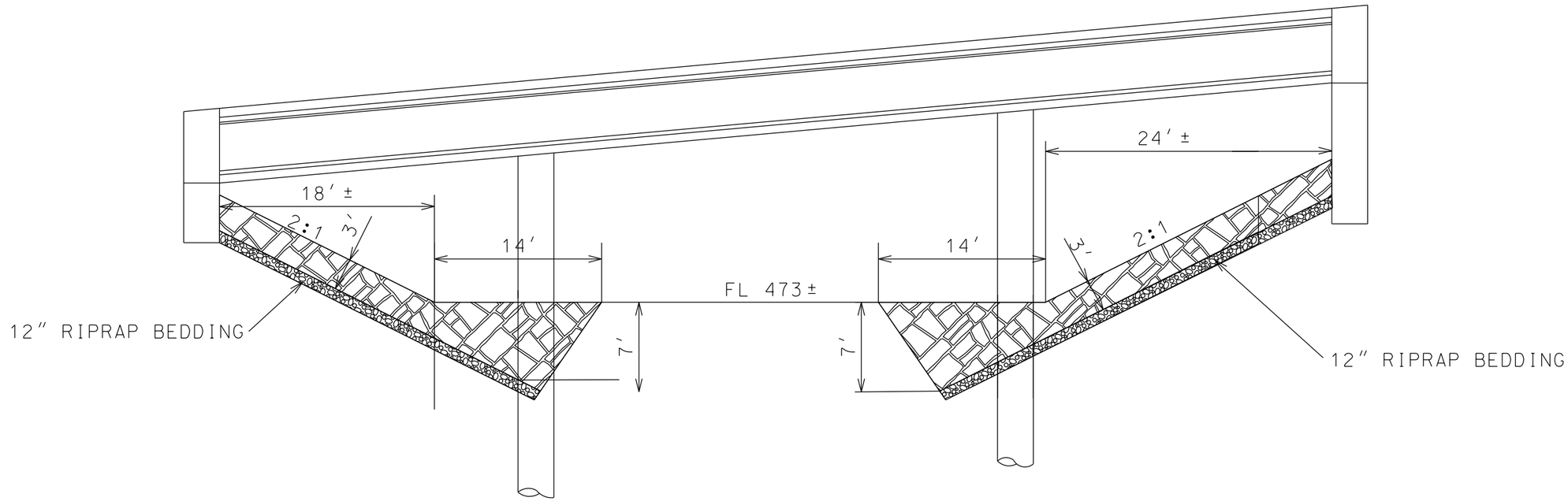

SECTION A-A
(RIGHT ANGLE OPENING TO STREAM)

SPECIAL SHEET
RIPRAP
DETAILS

Detailed Jan 2016
Checked Jan 2016

Note: This drawing is not to scale. Follow dimensions.

STATE OF MISSOURI
STEPHEN M. SEMPEK
NUMBER
E-24698
REGISTERED PROFESSIONAL ENGINEER

DATE PREPARED	1/20/2016
STATE	MO
SHEET NO.	14
ROUTE	STROUP
COUNTY	JEFFERSON
JOB NO.	13-0079
PROJECT NO.	STP-5403 (656)
BRIDGE NO.	24700121

DATE	DESCRIPTION

IF A SEAL IS PRESENT ON THIS SHEET IT HAS BEEN ELECTRONICALLY SEALED AND DATED.

JEFFERSON COUNTY PUBLIC WORKS
DEPARTMENT
P.O. BOX 100
HILLSBORO, MO 63050
(636-797-5340) PHONE
(636-797-5565) FAX

ABNA
4140 LINDELL BOULEVARD
ST. LOUIS, MO 63108
PH. 314-454-0222
CERTIFICATE/LICENSE NO. 001501

(50'-70'-50') PRESTRESSED CONCRETE GIRDER SPANS

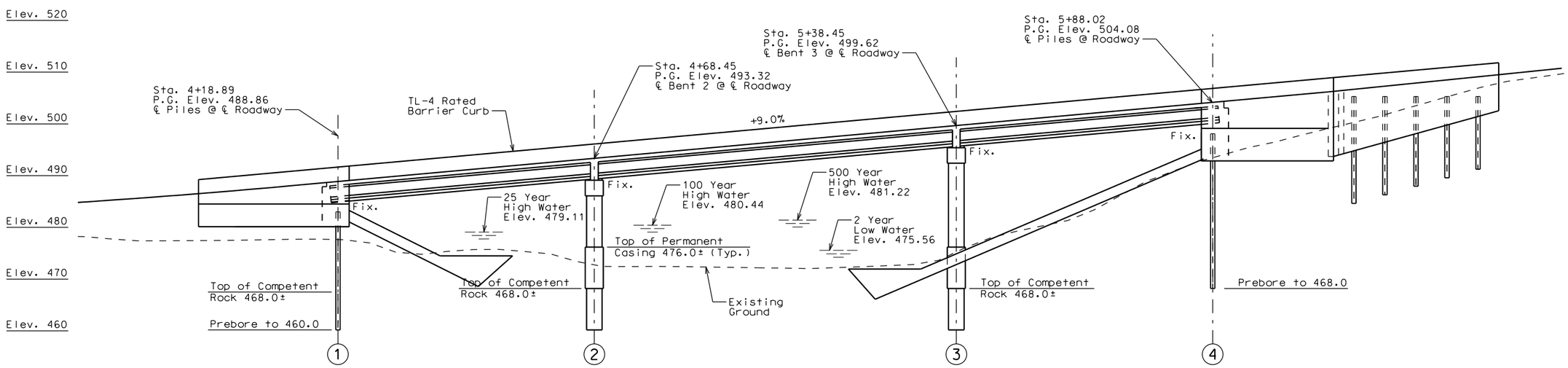

ELEVATION

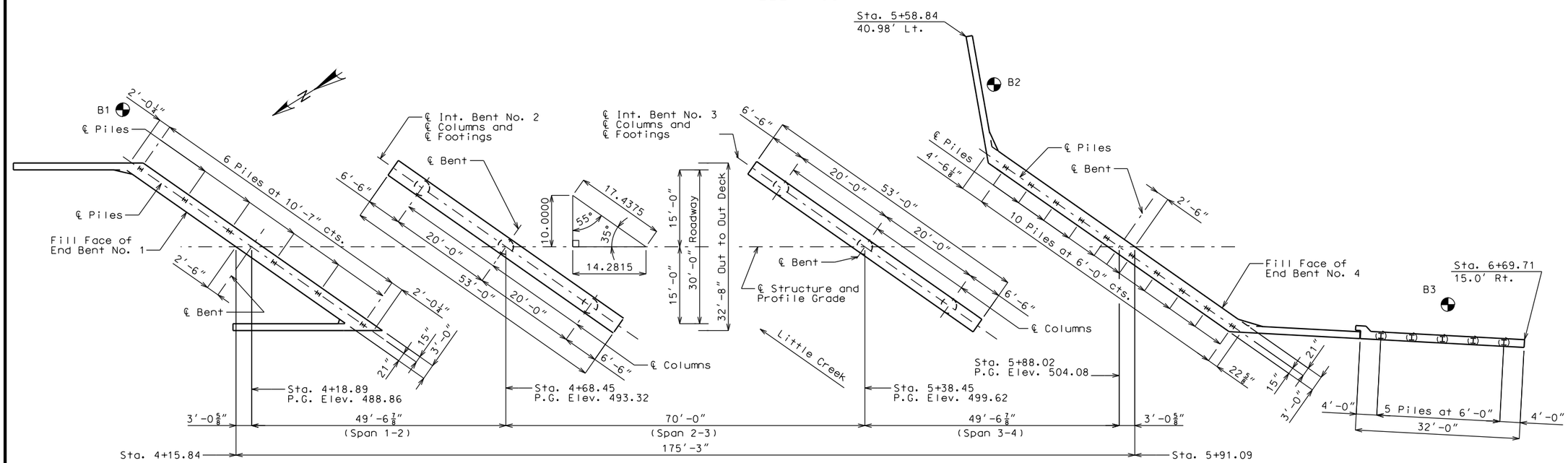

PLAN

"◐" Indicates location of borings.

Notice and Disclaimer Regarding Boring Log Data

The locations of all subsurface borings for this structure are shown on the bridge plan sheet for this structure. Boring data for the numbered locations is shown on Sheet No. 3. The boring data for all locations indicated, as well as any other boring logs or other factual records of subsurface data and investigations performed by the County for the design of the project, will be provided in the bridge electronic deliverable file or will be available from the Project Contact upon written request. No greater significance or weight should be given to the boring data depicted on the plan sheets than is subsurface data available from the County or elsewhere.

The County does not represent or warrant that any such boring data accurately depicts the conditions to be encountered in constructing this project. A contractor assumes all risks it may encounter in basing its bid prices, time or schedule of performance on the boring data depicted here or those available from the district, or on any other documentation not expressly warranted, which the contractor may obtain from the County.

Notes:

Roadway fill shall be completed to the final roadway section and up to the elevation of the bottom of the concrete beam within the limits of the structure and for not less than 25 feet in back of the fill face of the end bents before any piles are driven for any bents falling within the embankment section.

For General Notes, Pile and Footing Data and Estimated Quantities for Slab on Concrete I-Girder, see Sheet No. 2.

Dimensions shown in plan are horizontal.

TBM #3 - 5/8" Iron Rod with ABNA Orange Trav. Pnt. Cap (Traverse Point 102)
10.01' Rt. Sta. 7+02.94: Elevation 514.84

BRIDGE: OVER LITTLE CREEK

COUNTY ROAD: STROUP

STA. 4+15.84

Detailed Jan 2016
Checked Jan 2016

Note: This drawing is not to scale. Follow dimensions.

STATE OF MISSOURI
STEPHEN M. SEWELL
NUMBER
E-24698
REGISTERED PROFESSIONAL ENGINEER

DATE PREPARED	
1/20/2016	
STATE	SHEET NO.
MO	15
ROUTE	
STROUP	
COUNTY	
JEFFERSON	
JOB NO.	
13-0079	
PROJECT NO.	
STP-5403 (656)	
BRIDGE NO.	
24700121	

DATE	DESCRIPTION

IF A SEAL IS PRESENT ON THIS SHEET IT HAS BEEN ELECTRONICALLY SEALED AND DATED.

JEFFERSON COUNTY PUBLIC WORKS DEPARTMENT
P.O. BOX 100
HILLSBORO, MO 63050
(636-797-5340) PHONE
(636-797-5565) FAX

ABNA
4140 LINDELL BOULEVARD
ST. LOUIS, MO 63108
PH. 314-454-0222
CERTIFICATE/LICENSE NO. 001501

Estimated Quantities

Item		Substr.	Superstr.	Total
Class 1 Excavation	cu. yard	41		41
Removal of Bridges (2520010)	lump sum	1		1
Bridge Approach Slab (Bridge)	sq. yard		167	167
Drilled Shaft (3'-6")	linear foot	48		48
Rock Socket (3'-0")	linear foot	48		48
Supplementary Television Camera Inspection	each	6		6
Foundation Inspection Holes	linear foot	108		108
Concrete Coring	linear foot	102		102
Sonic Logging Testing	each	6		6
Structural Steel Piles (12 in.)	linear foot	487		487
Pre-Bore for Piling	linear foot	418		418
Setting Piles in Rock	each	5		5
Class B Concrete (Substructure)	cu. yard	211.6		211.6
Slab on Concrete I-Girder	sq. yard		630	630
* Safety Barrier Curb	linear foot		446	446
Type 4 (45") Prestressed Concrete I-Girder	linear foot		656	656
Reinforcing Steel Bridges	pound	31,010		31,010
Steel Intermediate Diaphragm for P/S Concrete Girders	each		3	3
Slab Drains	each		7	7
Vertical Drain at End Bents	each		2	2
Laminated Neoprene Bearing Pad (Tapered)	each		24	24

All concrete above the construction joint in the end bents except detached wingwalls is included in the Estimated Quantities for Slab on Concrete I-Girder.

All reinforcement in the end bents except detached wingwalls is included in the Estimated Quantities for Slab on Concrete I-Girder.

All reinforcement in the intermediate bent concrete diaphragms except reinforcement embedded in the beam cap is included in the Estimated Quantities for Slab on Concrete I-Girder.

All concrete above the intermediate beam cap is included in the Estimated Quantities for Slab on Concrete I-Girder.

Cost of channel shear connectors (Pile Anchors) (ASTM A709 Grade A36) C4x5.4 in place will be considered completely covered by the contract unit price for Stuctural Steel Piles 12".

* Safety Barrier Curb shall be cast in place option or slip-form option.

Estimated Quantities for Slab on Concrete I-Girder

Item		Total
Class B-2 Concrete (Superstructure on Concrete I-Girder)	cu. yard	243.6
Reinforcing Steel	pound	25,620
Reinforcing Steel (Epoxy Coated)	pound	33,941

The table of Estimated Quantities for Slab on Concrete I-Girder represents the quantities used by the County in preparing the cost estimate for concrete slabs. The area of the concrete slab will be measured to the nearest square yard longitudinally fron end of slab and transversely from out to out of bridge slab (or with the horizontal dimensions as shown on the plan of slab.) Payment for prestressed panels, stay-in-place forms, conventional forms, all concrete and coated and uncoated reinforcing steel will be considered completely covered by the contract unit price for the slab. Variations may be encountered in the estimated quantities but the variations cannot be used for an adjustment in the contract unit price.

Method of forming the slab shall be as shown on the plans and in accordance with Sec 703. All hardware for forming the slab to be left in place as a permanent part of the structure shall be coated in accordance with ASTM A123 or ASTM B633 with a thickness class SC 4 and a finish type I, II or III.

The Estimated Quantities for Slab on Concrete I-Girder are based on skewed precast prestressed end panels.

Class B-2 Concrete quantity is based on minimum top flange thickness and minimum joint material thickness.

The prestressed panel quantities are not included in the table of Estimated Quantities for Slab on Concrete I-Girder.

Pile and Footing Data

Bent No.		1	4
Type		Steel	Steel
Kind		HP 12x53	HP 12x53
Number		6	10
Approximate Length	foot	23	26
Pile Driving Verification Method		Modified Gates Formula	Modified Gates Formula
Nominal Axial Pile Compression Resistance	kip	380	280
Minimum Tip Penetration	Elev.	460.0	468.0
Criteria for Minimum Tip Penetration		Minimum Embedment into Natural Ground	Minimum Embedment into Natural Ground
Hammer Energy Required	foot-pound	12,200	9000

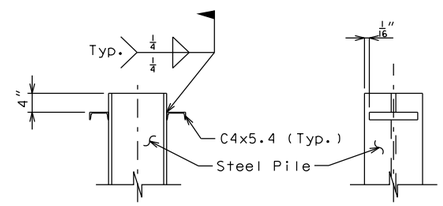

CHANNEL SHEAR CONNECTOR DETAIL
(Required for all piles)

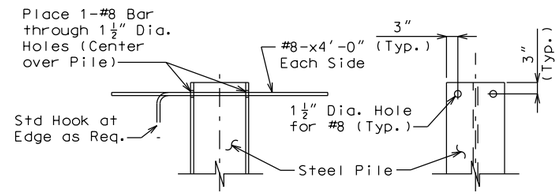

CHANNEL SHEAR CONNECTOR ALTERNATE
(Required for all piles)

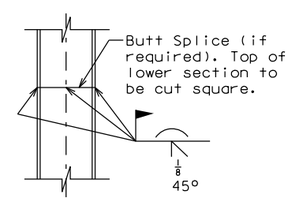

STEEL PILE SPLICE DETAIL

Hydrologic Data

Drainage Area	=	7.1 sq. miles
Design Discharge	=	5,523 cu. ft./sec. (100 Years)
Design H. W. Elev.	=	480.22 feet (100 Years)
Estimated Backwater	=	1.76 feet

Overtopping Flood Data

Discharge:

Roadway	=	Less than 50 years
Bridge	=	Greater than 100 years

GENERAL NOTES:

Design Specifications:

2012 - AASHTO LRFD 6th Edition and 2013 Interim Revisions.
Seismic Performance Category B
Design Earthquake Response Spectral Acceleration Coefficient at 1.0 Second Period, SD = 0.188g

Design Loading:

Vehicular = HL-93
Future Wearing Surface = 35 lb/sf
Earth 120 lb/cf, Equivalent Fluid Pressure 45 lb/ft
Superstructure: Simply-supported, non-composite for dead load. Composite for live load.

Design Unit Stresses:

Class B Concrete (Substructure)	f'c =	3,000 psi
Class B-2 Concrete (Drilled Shafts and Rock Sockets)	f'c =	4,000 psi
Class B-2 Concrete (Superstructure, except Prestressed Girders and Safety Barrier Curb)	f'c =	4,000 psi
Class B-1 Concrete Safety Barrier	f'c =	4,000 psi
Reinforcing Steel (Grade 60)	fy =	60,000 psi
Steel Pile (ASTM A709 Grade 50)	fb = 9,000 psi fy =	50,000 psi

For Precast Prestresssed Panel Stresses, see Sheet No. 24.
For Prestressed Girder Stresses, see Sheets No. 19 and 20.

Neoprene Pads:

Neoprene Bearing Pads (Tapered) shall be 60 durometer and shall be in accordance with Sec 716.

Joint Filler:

All joint filler shall be in accordance with Sec 1057 for preformed sponge rubber expansion and partition joint filler, except as noted.

Reinforcing Steel:

Minimum clearance to reinforcing steel shall be 1-1/2", unless otherwise shown.

Traffic Handling:

Traffic to be maintained on existing structure during construction. See Roadway Plans for traffic control.

Construction Specifications:

The 2011 Edition of the Missouri Highway and Transportation Commission, "Missouri Standard Specifications for Highway Construction" supplemental revisions and the job specifications shall govern.

Miscellaneous:

"Sec" refers to the sections in the standard and supplemental specifications unless specified otherwise.

Payment for furnishing all materials, labor and excavation necessary to construct the Rt. detached wing wall at End Bent No. 4 including the Class 1 Excavation, 12" Pile, Prebore, Class B Concrete (Substr.) and Reinforcing Steel (Bridges), will be considered completely covered by the contract unit price for these items.

STATE OF MISSOURI
STEPHEN M. SEELE
NUMBER E-24698
REGISTERED PROFESSIONAL ENGINEER

DATE PREPARED
1/20/2016

STATE	SHEET NO.
MO	16

ROUTE
STROUP
COUNTY
JEFFERSON
JOB NO.
13-0079
PROJECT NO.
STP-5403 (656)
BRIDGE NO.
24700121

DATE	DESCRIPTION

IF A SEAL IS PRESENT ON THIS SHEET IT HAS BEEN ELECTRONICALLY SEALED AND DATED.

JEFFERSON COUNTY PUBLIC WORKS DEPARTMENT
P.O. BOX 100
HILLSBORO, MO 63050
(636-797-5340) PHONE
(636-797-5565) FAX

ABNA
4140 LINDELL BOULEVARD
ST. LOUIS, MO 63108
PH. 314-454-0222
CERTIFICATE/LICENSE NO. 001501

GENERAL NOTES AND ESTIMATED QUANTITIES

Detailed Jan 2016
Checked Jan 2016

Note: This drawing is not to scale. Follow dimensions.

J:\2013\0079\Cadd\Bridge\B_24700121_002_Gen Notes.dgn 2:33:49 PM 1/20/2016

LOG OF BORING B-1

SHEET 1 of 1

OEI
Civil•Geotechnical•Environmental•Engineers
4670 Lansdowne Avenue Suite 111
St. Louis Missouri 63116
(314)351-1510 Fax (314)351-2825

CLIENT: ABNA
PROJECT: Stroup Road Bridge Over Little Creek
LOCATION: Jefferson County, Missouri
NUMBER:
DATE(S) DRILLED: 4/4/14 - 4/4/14

DRILLING METHOD(S): HSA and Nx Drilling

GROUNDWATER INFORMATION: Groundwater was not encountered during and after drilling.

SURFACE ELEVATION: 481

FIELD DATA: SOIL SYMBOL; DEPTH (FT); ELEVATION (FT); SAMPLES; N: BLOWS/FT; P: TSF; T: TSF; PERCENT RECOVERY; ROCK QUALITY DESIGNATION

LABORATORY DATA: MOISTURE CONTENT (%); ATTERBERG LIMITS: LL LIQUID LIMIT, PL PLASTIC LIMIT, PI PLASTICITY INDEX; DRY DENSITY (lbs/ft3); COMPRESSIVE STRENGTH (tsf); FAILURE STRAIN (%); CONFINING PRESSURE (psi); MINUS NO. 200 SIEVE (%)

DEPTH (FT)	N: BLOWS/FT	P: TSF	T: TSF	PERCENT RECOVERY	DESCRIPTION OF STRATUM
	6	2.5		33	Stiff to very stiff, redish brown, silty CLAY with rock fragments.
	3	1.0		66	Stiff, redish brown, clayey SILT.
5	5			66	Loose brown, moist sandy SILT.
	9			66	Medium, moist sandy SILT with trace of clay and rock fragments.
10					Auger Refusal at 12.17 feet. LIMESTONE: Hard, grey, weathered with close beds, fractured.
15				95 21.7	
					Coring Terminated at 17.27 feet.

N - STANDARD PENETRATION TEST RESISTANCE
P - POCKET PENETROMETER RESISTANCE
T - POCKET TORVANE SHEAR STRENGTH

REMARKS: On site classification by: Joseph S. Osuma

LOG OF BORING STROUP ROAD BRIDGE OVER LITTLE CREEK.GPJ OELGST 4/5/14

LOG OF BORING B-2

SHEET 1 of 1

OEI
Civil•Geotechnical•Environmental•Engineers
4670 Lansdowne Avenue Suite 111
St. Louis Missouri 63116
(314)351-1510 Fax (314)351-2825

CLIENT: ABNA
PROJECT: Stroup Road Bridge Over Little Creek
LOCATION: Jefferson County, Missouri
NUMBER:
DATE(S) DRILLED: 4/4/14 - 4/4/14

DRILLING METHOD(S): HSA and Nx Drilling

GROUNDWATER INFORMATION: Groundwater was not encountered during and after drilling.

SURFACE ELEVATION: 490

FIELD DATA: SOIL SYMBOL; DEPTH (FT); ELEVATION (FT); SAMPLES; N: BLOWS/FT; P: TSF; T: TSF; PERCENT RECOVERY; ROCK QUALITY DESIGNATION

LABORATORY DATA: MOISTURE CONTENT (%); ATTERBERG LIMITS: LL LIQUID LIMIT, PL PLASTIC LIMIT, PI PLASTICITY INDEX; DRY DENSITY (lbs/ft3); COMPRESSIVE STRENGTH (tsf); FAILURE STRAIN (%); CONFINING PRESSURE (psi); MINUS NO. 200 SIEVE (%)

DEPTH (FT)	N: BLOWS/FT	P: TSF	T: TSF	PERCENT RECOVERY	DESCRIPTION OF STRATUM
	4	0.5		66	Medium, moist, dark brown, silty CLAY.
	12			33	Dark brown silty CLAY and rock fragments.
5	3	0.25		66	Soft, moist, dark brown, clayey SILT with rock fragments.
	9			80	Medium, moist, brown sandy SILT.
10	50/3				
15				97 50	Auger Refusal at 14 feet. LIMESTONE: Hard, grey, weathered with close beds, slightly fractured.
					Coring Terminated at 19 feet.

N - STANDARD PENETRATION TEST RESISTANCE
P - POCKET PENETROMETER RESISTANCE
T - POCKET TORVANE SHEAR STRENGTH

REMARKS: On site classification by: Joseph S. Osuma

LOG OF BORING STROUP ROAD BRIDGE OVER LITTLE CREEK.GPJ OELGST 4/5/14

LOG OF BORING B-3

SHEET 1 of 1

OEI
Civil•Geotechnical•Environmental•Engineers
4670 Lansdowne Avenue Suite 111
St. Louis Missouri 63116
(314)351-1510 Fax (314)351-2825

CLIENT: ABNA
PROJECT: Stroup Road Bridge Over Little Creek
LOCATION: Jefferson County, Missouri
NUMBER:
DATE(S) DRILLED: 4/4/14 - 4/4/14

DRILLING METHOD(S): HSA Drilling

GROUNDWATER INFORMATION: Groundwater was not encountered during and after drilling.

SURFACE ELEVATION: 500

FIELD DATA: SOIL SYMBOL; DEPTH (FT); ELEVATION (FT); SAMPLES; N: BLOWS/FT; P: TSF; T: TSF; PERCENT RECOVERY; ROCK QUALITY DESIGNATION

LABORATORY DATA: MOISTURE CONTENT (%); ATTERBERG LIMITS: LL LIQUID LIMIT, PL PLASTIC LIMIT, PI PLASTICITY INDEX; DRY DENSITY (lbs/ft3); COMPRESSIVE STRENGTH (tsf); FAILURE STRAIN (%); CONFINING PRESSURE (psi); MINUS NO. 200 SIEVE (%)

DEPTH (FT)	DESCRIPTION OF STRATUM
	Brown silty CLAY.
5	Auger Refusal at 5 feet.

N - STANDARD PENETRATION TEST RESISTANCE
P - POCKET PENETROMETER RESISTANCE
T - POCKET TORVANE SHEAR STRENGTH

REMARKS: On site classification by: Joseph S. Osuma

LOG OF BORING STROUP ROAD BRIDGE OVER LITTLE CREEK.GPJ OELGST 4/5/14

STATE OF MISSOURI
STEPHEN M. SEELY
NUMBER E-24698
REGISTERED PROFESSIONAL ENGINEER

DATE PREPARED	1/20/2016
STATE	MO
SHEET NO.	17
ROUTE	STROUP
COUNTY	JEFFERSON
JOB NO.	13-0079
PROJECT NO.	STP-5403 (656)
BRIDGE NO.	24700121

DATE	DESCRIPTION

JEFFERSON COUNTY PUBLIC WORKS
DEPARTMENT
P.O. BOX 100
HILLSBORO, MO 63050
(636-797-5340) PHONE
(636-797-5565) FAX

ABNA
4140 LINDELL BOULEVARD
ST. LOUIS, MO 63108
PH. 314-454-0222
CERTIFICATE/LICENSE NO. 001501

IF A SEAL IS PRESENT ON THIS SHEET IT HAS BEEN ELECTRONICALLY SEALED AND DATED.

Detailed Jan 2016
Checked Jan 2016

Note: This drawing is not to scale. Follow dimensions.

J:\2013\0079\Cadd\Bridge\B_24700121_003_Boring Log.dgn 11:01:04 AM 1/20/2016

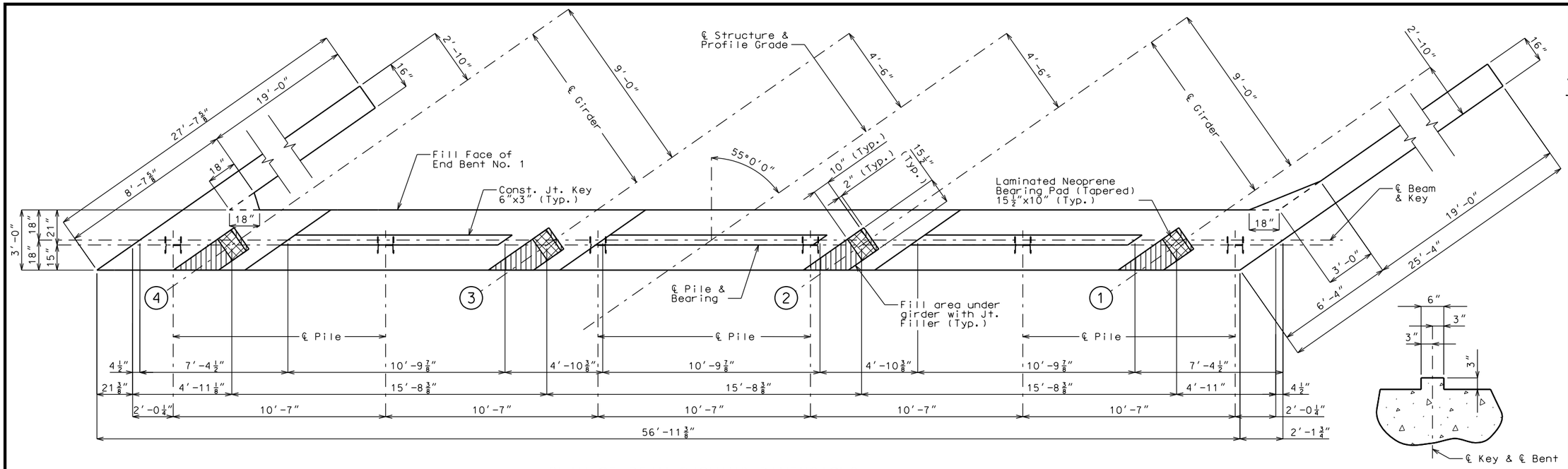

PLAN OF BEAM SHOWING DIMENSIONS

TYPICAL SECTION THRU KEY

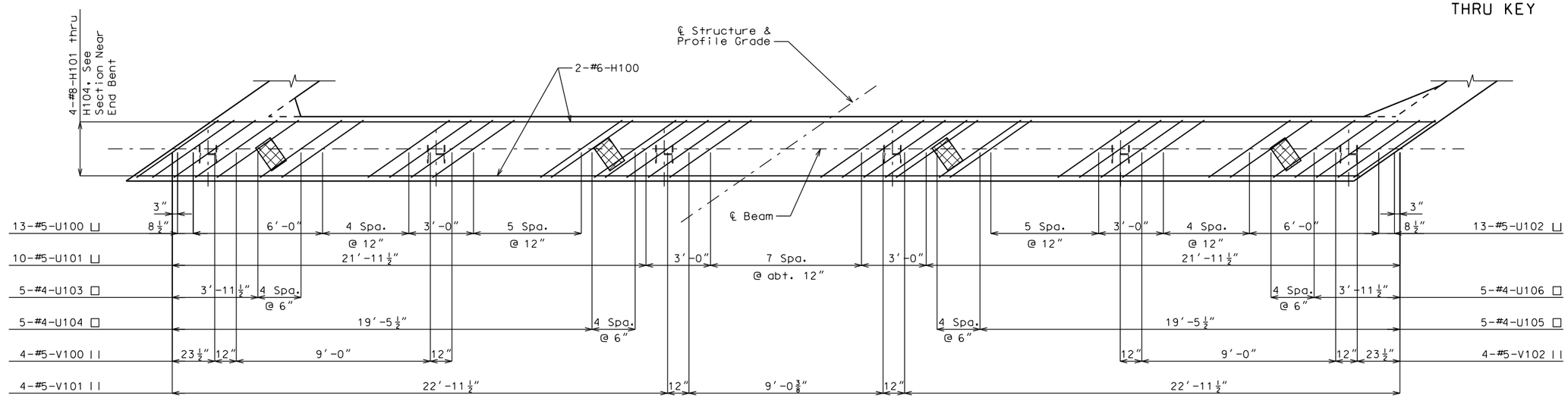

PLAN OF BEAM SHOWING REINFORCEMENT

Notes:

For details of End Bent No. 1 not shown, see Sheets No. 5 and 6.

For details of Pile Anchors, see Sheet No. 2.

For details of Steel Pile Splice, see Sheet No. 2.

For details of Vertical Drain at End Bents, see Sheet No. 7.

All vertical reinforcing bars in the substructure beams or caps shall be field adjusted to clear piles by at least 1½".

Substructure Quantity Table for Bent No. 1		
Item		Quantity
Structural Steel Pile (12 in.)	linear foot	138
Prebore for Piling	linear foot	129
Class B Concrete (substructure)	cu. yard	40.0

Note: These quantities are included in the estimated quantities table on sheet no. 2.

Detailed Jan 2016
Checked Jan 2016

Note: This drawing is not to scale. Follow dimensions.

STATE OF MISSOURI
STEPHEN M. SEELE
NUMBER E-24698
REGISTERED PROFESSIONAL ENGINEER

DATE PREPARED	1/20/2016
STATE	MO
SHEET NO.	18
ROUTE	STROUP
COUNTY	JEFFERSON
JOB NO.	13-0079
PROJECT NO.	STP-5403 (656)
BRIDGE NO.	24700121

DESCRIPTION

DATE

IF A SEAL IS PRESENT ON THIS SHEET IT HAS BEEN ELECTRONICALLY SEALED AND DATED.

JEFFERSON COUNTY PUBLIC WORKS DEPARTMENT
P.O. BOX 100
HILLSBORO, MO 63050
(636-797-5340) PHONE
(636-797-5565) FAX

ABNA
4140 LINDELL BOULEVARD
ST. LOUIS, MO 63108
PH. 314-454-0222
CERTIFICATE/LICENSE NO. 001501

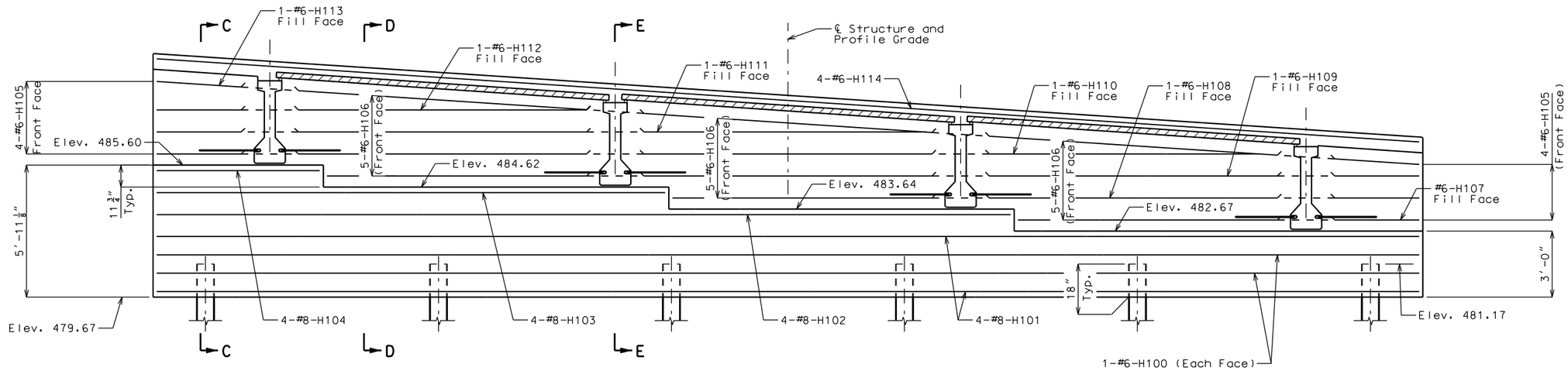

SECTION NEAR END BENT

(Looking Back Station)

Note: Construction joint key 6"x3" not shown.

Notes:

For details of End Bent No. 1 not shown, see Sheet Nos. 4 and 6.

For Elevation A-A, B-B, Sections C-C, D-D, E-E and F-F see Sheet No. 6.

Bend #6 F bars in field to clear girders.

All strands at end of girders shall be field bent or, if necessary, cut in field to maintain 1 1/2" minimum clearance to fill face of end bent.

For location of coil tie rods and #5-H105 (Strand Tie Bars), see Sheet No. 19.

All concrete in the end bent above top of beam and below top of slab shall be Class B-2.

Work this sheet with Sheet No. 4 and 6.

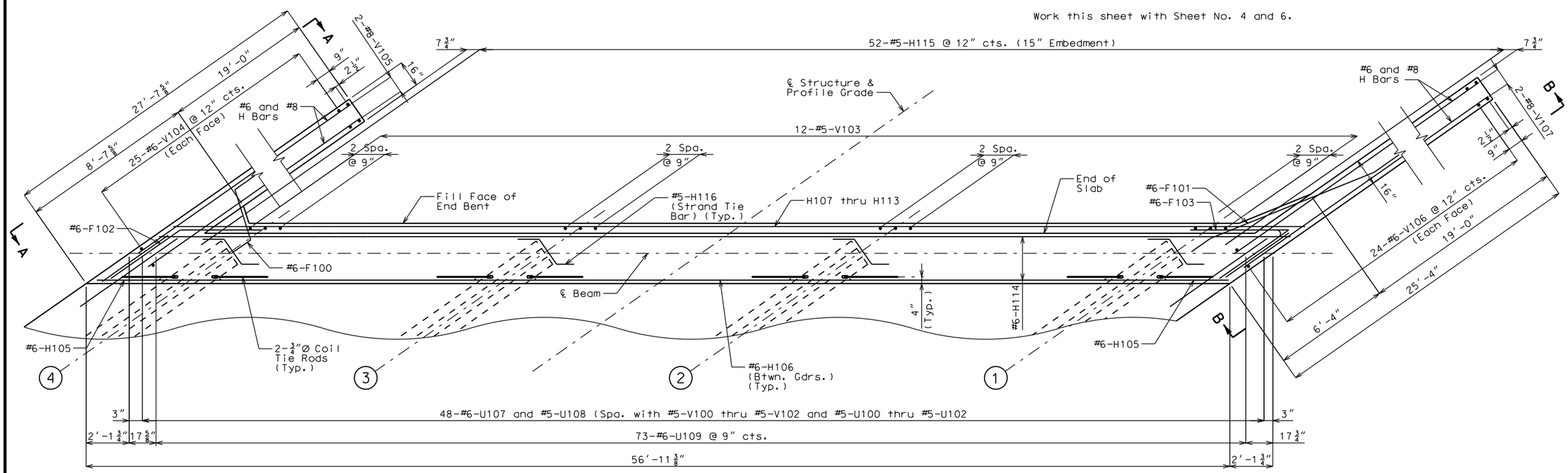

PART PLAN

DETAILS OF END BENT NO. 1

Detailed Jan 2016
Checked Jan 2016

Note: This drawing is not to scale. Follow dimensions.

STATE OF MISSOURI — STEPHEN M. SEMPLE — NUMBER E-24698 — REGISTERED PROFESSIONAL ENGINEER

DATE PREPARED	
1/20/2016	
STATE	SHEET NO.
MO	19
ROUTE	
STROUP	
COUNTY	
JEFFERSON	
JOB NO.	
13-0079	
PROJECT NO.	
STP-5403 (656)	
BRIDGE NO.	
24700121	

DESCRIPTION

DATE

IF A SEAL IS PRESENT ON THIS SHEET IT HAS BEEN ELECTRONICALLY SEALED AND DATED.

JEFFERSON COUNTY PUBLIC WORKS DEPARTMENT
P.O. BOX 100
HILLSBORO, MO 63050
(636-797-5340) PHONE
(636-797-5565) FAX

ABNA
4140 LINDELL BOULEVARD
ST. LOUIS, MO 63108
PH. 314-454-0222
CERTIFICATE/LICENSE NO. 001501

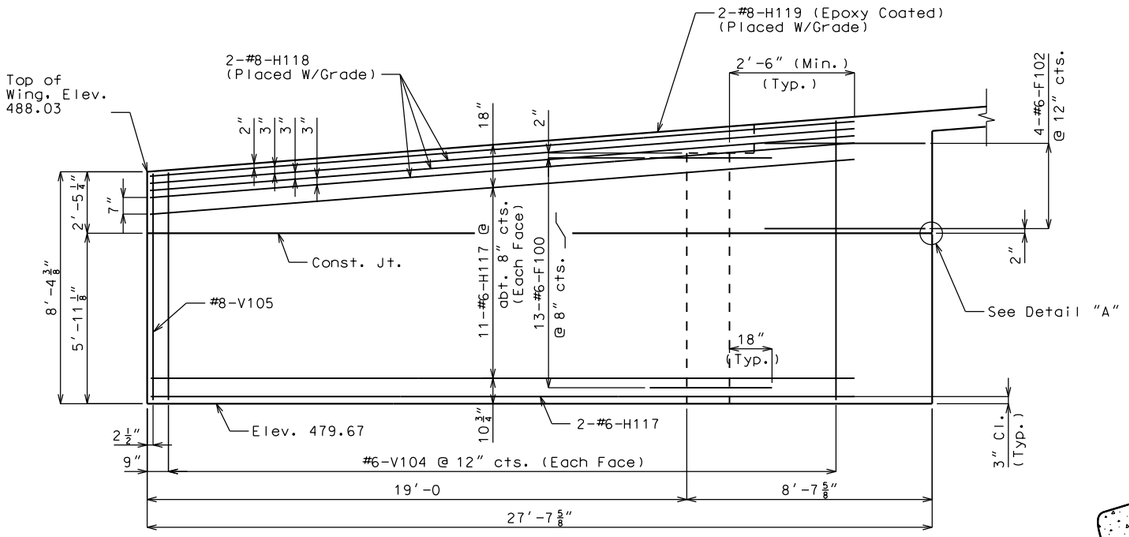

ELEVATION A-A

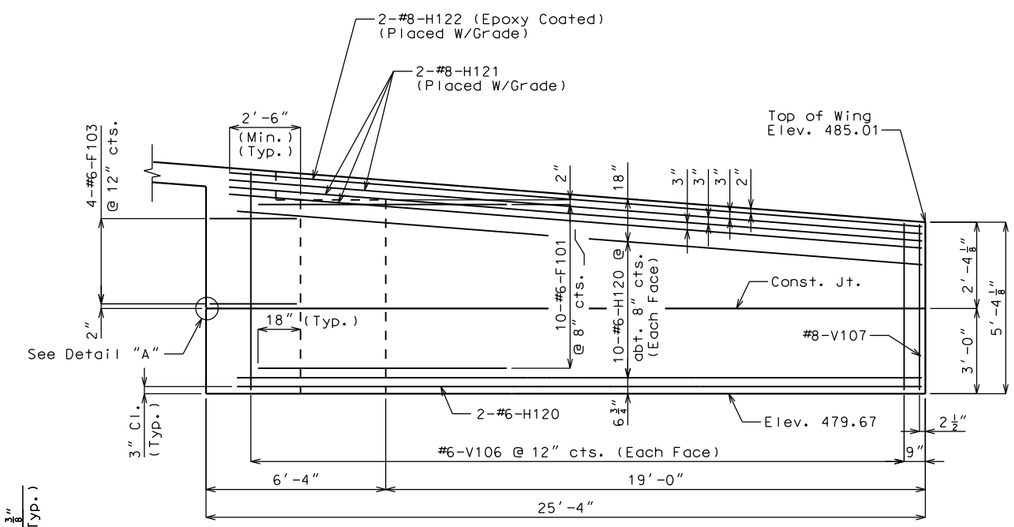

ELEVATION B-B

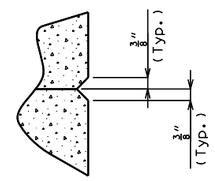

DETAIL "A"

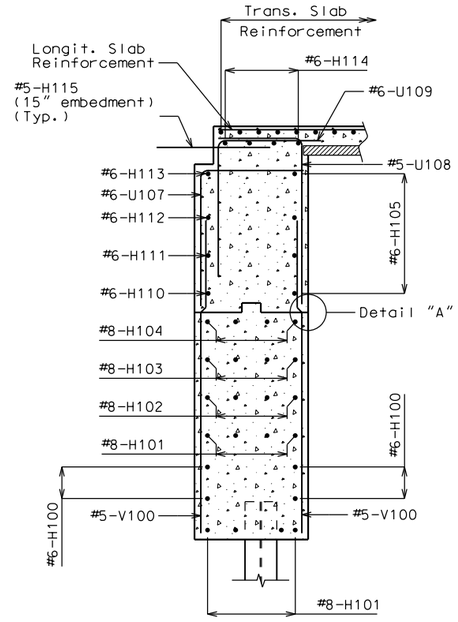

SECTION C-C

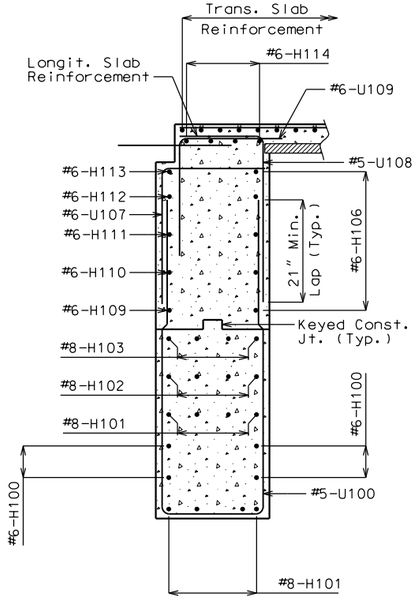

SECTION D-D

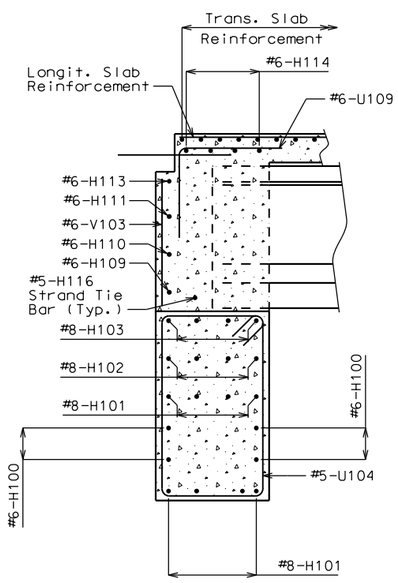

SECTION E-E

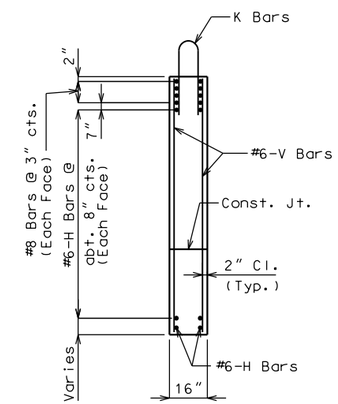

PART SECTION
THRU WING

Notes:

For details of End Bent No. 1 not shown, see Sheet Nos. 4 and 5.

For location of Elevations A-A, B-B and Sections C-C, D-D, E-E and F-F see Sheet No. 5.

Bend #6 F bars in field to clear girders.

For location and details of K bars, see Sheet No. 31.

STATE OF MISSOURI
STEPHEN M. SEIBERT
NUMBER
E-24698
REGISTERED PROFESSIONAL ENGINEER

DATE PREPARED	1/20/2016
STATE	MO
SHEET NO.	20
ROUTE	STROUP
COUNTY	JEFFERSON
JOB NO.	13-0079
PROJECT NO.	STP-5403 (656)
BRIDGE NO.	24700121

DESCRIPTION

DATE

IF A SEAL IS PRESENT ON THIS SHEET IT HAS BEEN ELECTRONICALLY SEALED AND DATED.

JEFFERSON COUNTY PUBLIC WORKS
DEPARTMENT
P.O. BOX 100
HILLSBORO, MO 63050
(636-797-5340) PHONE
(636-797-5565) FAX

ABNA
4140 LINDELL BOULEVARD
ST. LOUIS, MO 63108
PH. 314-454-0222
CERTIFICATE/LICENSE NO. 001501

Detailed Jan 2016
Checked Jan 2016

Note: This drawing is not to scale. Follow dimensions.

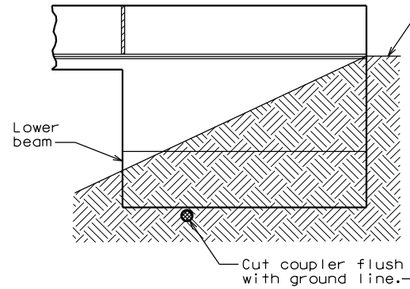

ELEVATION OF WING

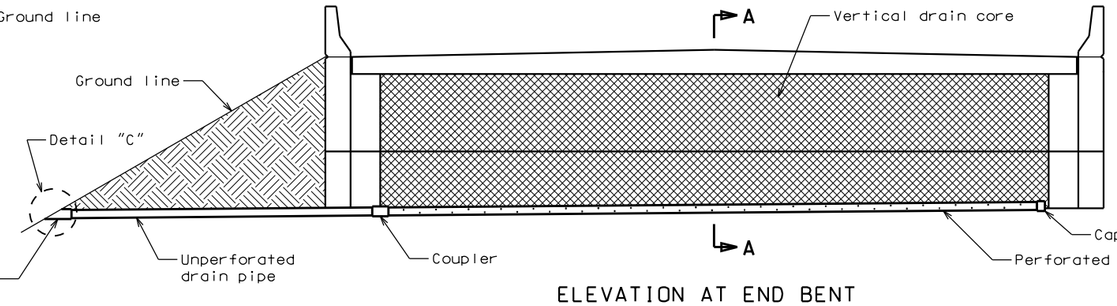

ELEVATION AT END BENT

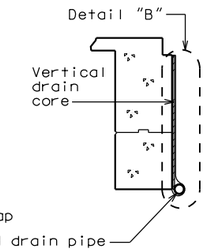

SECTION A-A

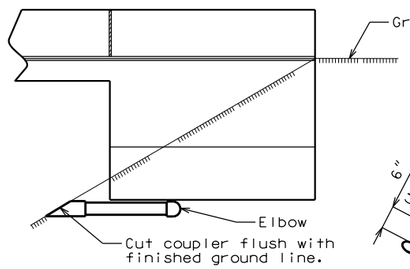

ELEVATION OF WING

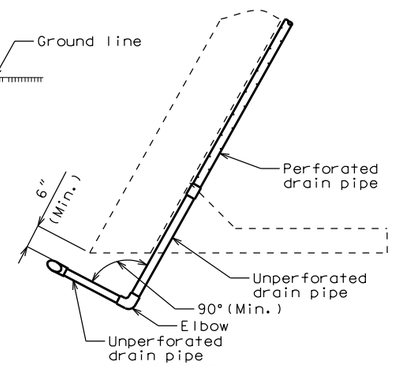

PART PLAN

OPTIONAL BENT DRAIN (✳)

(✳) Only if rock is encountered at outside of wing.

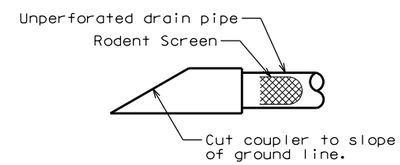

DETAIL "C"

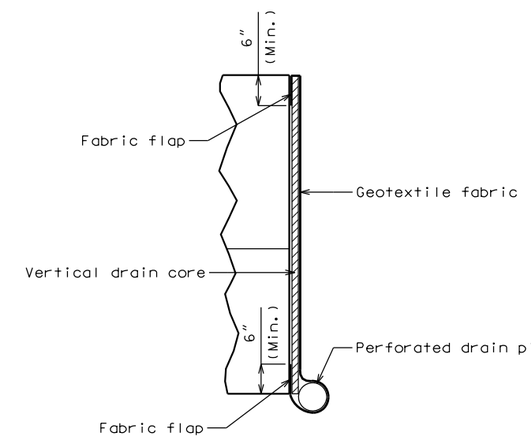

DETAIL "B"

Note:
Drain pipe may be either 6" diameter corrugated metallic-coated steel pipe underdrain, 4" diameter corrugated polyvinyl chloride (PVC) drain pipe, or 4" diameter corrugated polyethylene (PE) drain pipe.

Place drain pipe at fill face of end bent and slope to lowest grade of ground line, also missing the lower beam of end bent by 1 1/2". (See elevation at end bent.)

Perforated pipe shall be placed at fill face side at the bottom of end bent and plain pipe shall be used where the vertical drain ends to the exit at ground line.

VERTICAL DRAIN AT END BENTS

Detailed Jan 2016
Checked Jan 2016

Note: This drawing is not to scale. Follow dimensions.

STATE OF MISSOURI
STEPHEN M. SEELY
NUMBER
E-24698
REGISTERED PROFESSIONAL ENGINEER

DATE PREPARED	1/20/2016
STATE	MO
SHEET NO.	21
ROUTE	STROUP
COUNTY	JEFFERSON
JOB NO.	13-0079
PROJECT NO.	STP-5403 (656)
BRIDGE NO.	24700121

DATE	DESCRIPTION

IF A SEAL IS PRESENT ON THIS SHEET IT HAS BEEN ELECTRONICALLY SEALED AND DATED.

JEFFERSON COUNTY PUBLIC WORKS
DEPARTMENT
P.O. BOX 100
HILLSBORO, MO 63050
(636-797-5340) PHONE
(636-797-5565) FAX

ABNA
4140 LINDELL BOULEVARD
ST. LOUIS, MO 63108
PH. 314-454-0222
CERTIFICATE/LICENSE NO. 001501

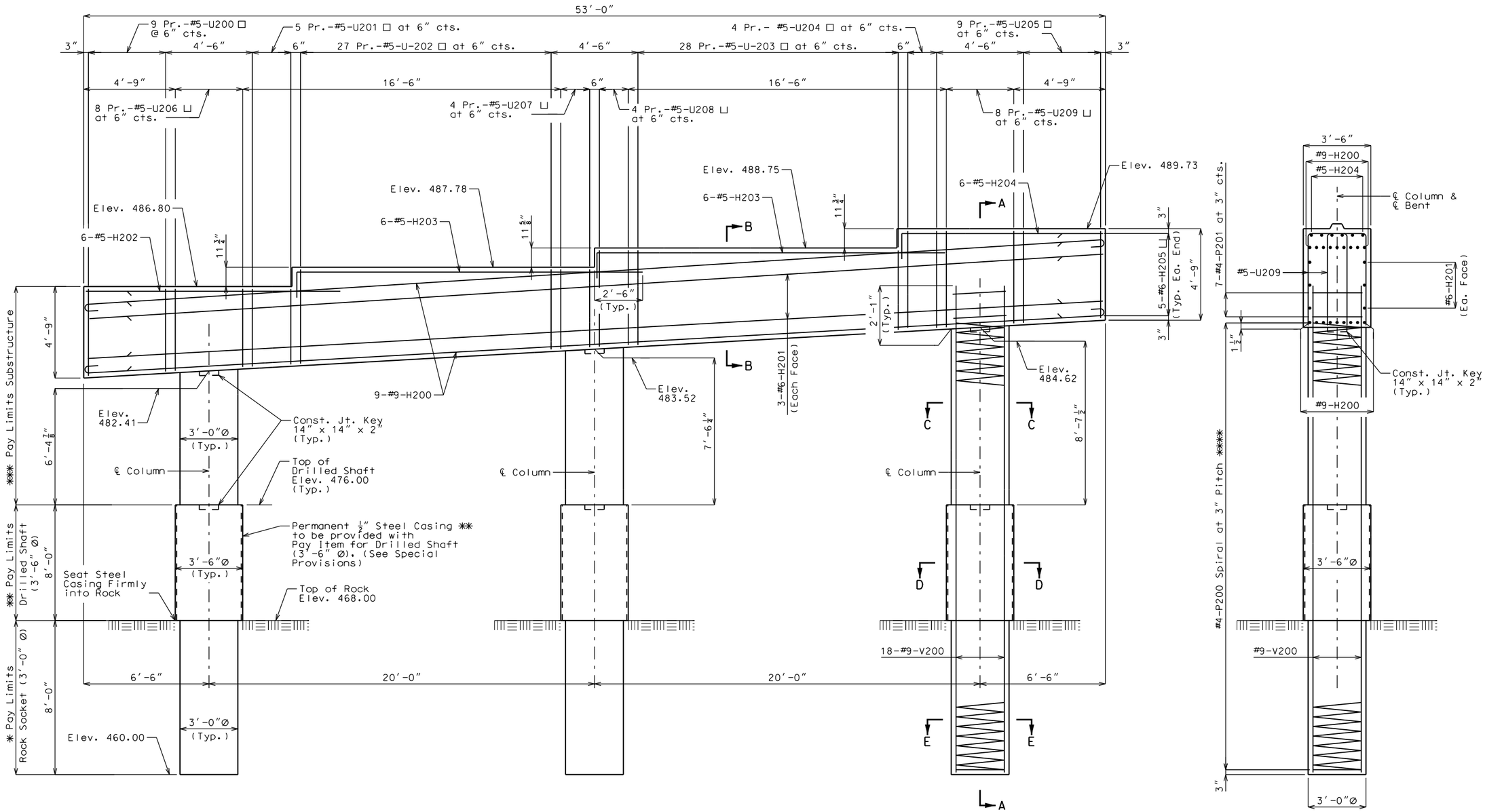

ELEVATION
(Looking up Station)
Note: 6"x3" Key not shown for clarity.

SECTION A-A

Notes:

For details of Intermediate Bent No. 2 not shown, see Sheets No. 9 and 10.

For Substructure Quantity Table for Bent No. 2, see Sheet No. 10.

✱ Indicates Pay Limits for Rock Socket (3'-0" Ø)

✱✱ Indicates Pay Limits for Drilled Shaft (3'-6" Ø) (Permanent Casing to be Provided)

✱✱✱ Indicates Pay limits for Substructure

✱✱✱✱ The spiral bars shall be continued for a distance of 1½" from the column connection into the beam cap.

DETAILS OF INTERMEDIATE BENT NO. 2

Detailed Jan 2016
Checked Jan 2016

Note: This drawing is not to scale. Follow dimensions.

STATE OF MISSOURI
STEPHEN M. SEELY
NUMBER E-24698
REGISTERED PROFESSIONAL ENGINEER

IF A SEAL IS PRESENT ON THIS SHEET IT HAS BEEN ELECTRONICALLY SEALED AND DATED.

DATE PREPARED	1/20/2016
STATE	MO
SHEET NO.	22
ROUTE	STROUP
COUNTY	JEFFERSON
JOB NO.	13-0079
PROJECT NO.	STP-5403 (656)
BRIDGE NO.	24700121

DESCRIPTION

DATE

JEFFERSON COUNTY PUBLIC WORKS DEPARTMENT
P.O. BOX 100
HILLSBORO, MO 63050
(636-797-5340) PHONE
(636-797-5565) FAX

ABNA
4140 LINDELL BOULEVARD
ST. LOUIS, MO 63108
PH. 314-454-0222
CERTIFICATE/LICENSE NO. 001501

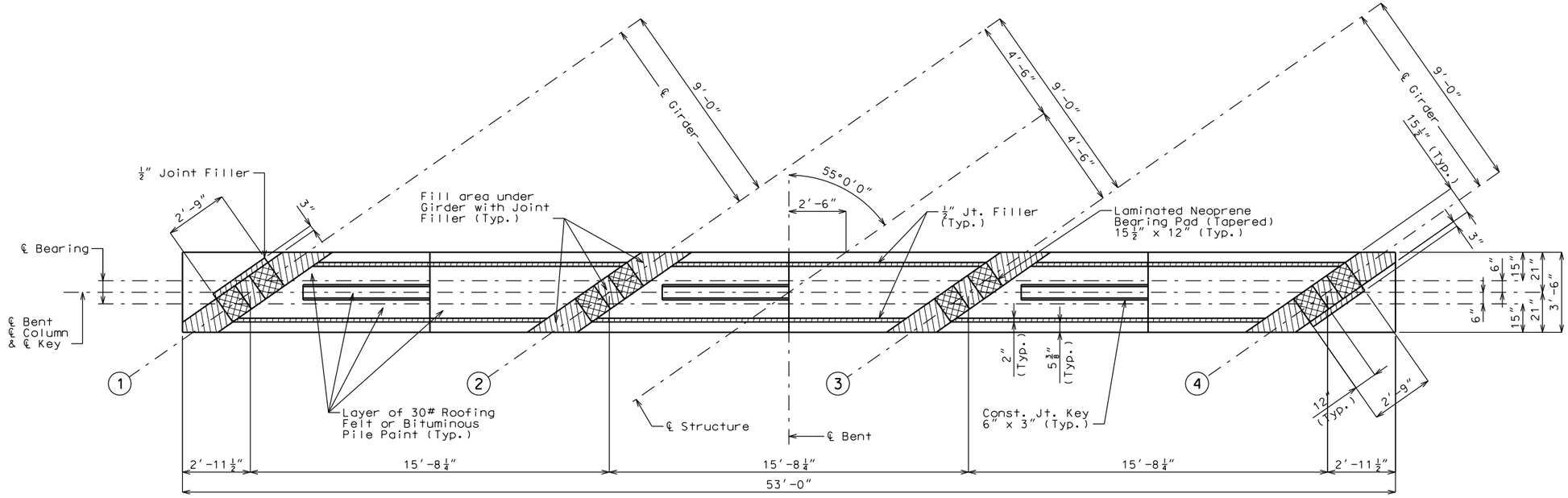

PART PLAN OF BEAM

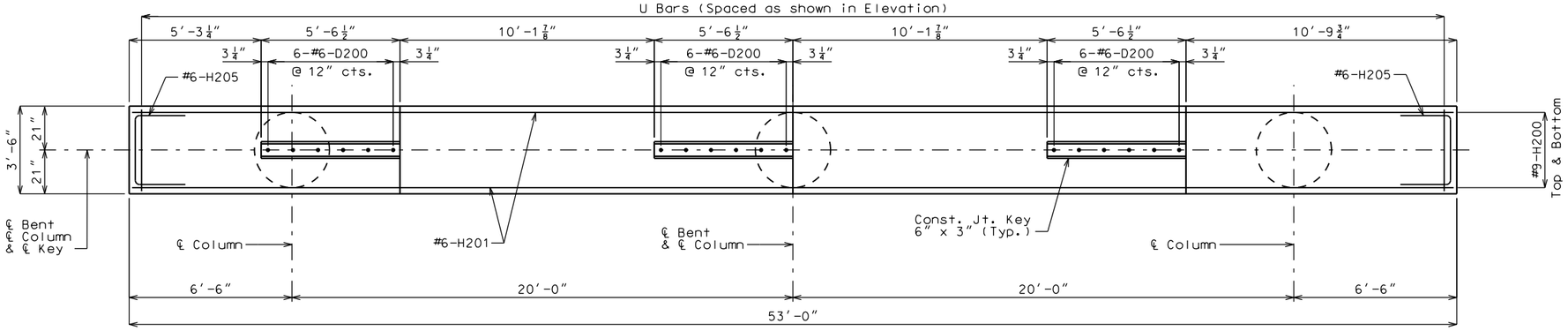

PART PLAN SHOWING REINFORCEMENT

Notes:

For details of Intermediate Bent No. 2 not shown, see Sheets No. 8 and 10.

DETAILS OF INTERMEDIATE BENT NO. 2

Detailed Jan 2016
Checked Jan 2016

Note: This drawing is not to scale. Follow dimensions.

STATE OF MISSOURI
STEPHEN M. SEELY
NUMBER E-24698
REGISTERED PROFESSIONAL ENGINEER

DATE PREPARED	1/20/2016
STATE	MO
SHEET NO.	23
ROUTE	STROUP
COUNTY	JEFFERSON
JOB NO.	13-0079
PROJECT NO.	STP-5403 (656)
BRIDGE NO.	24700121

DATE	DESCRIPTION

IF A SEAL IS PRESENT ON THIS SHEET IT HAS BEEN ELECTRONICALLY SEALED AND DATED.

JEFFERSON COUNTY PUBLIC WORKS DEPARTMENT
P.O. BOX 100
HILLSBORO, MO 63050
(636-797-5340) PHONE
(636-797-5565) FAX

ABNA
4140 LINDELL BOULEVARD
ST. LOUIS, MO 63108
PH. 314-454-0222
CERTIFICATE/LICENSE NO. 001501

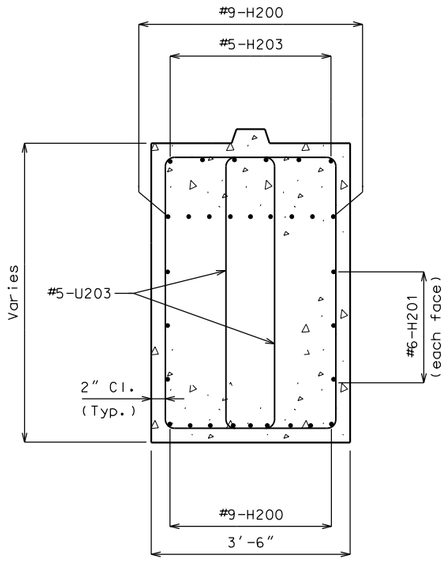

SECTION B-B

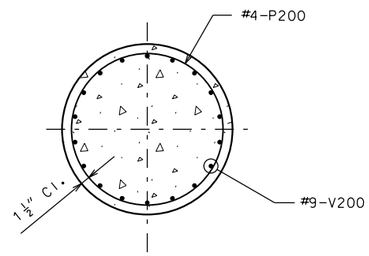

SECTION C-C

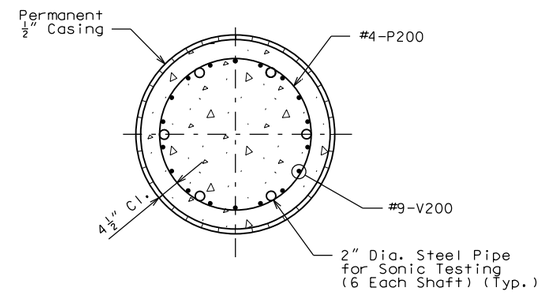

SECTION D-D

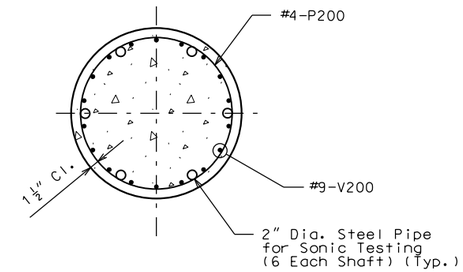

SECTION E-E

Note: Steel pipe shall be placed as shown from bottom of shaft to 12" above permanent casing.

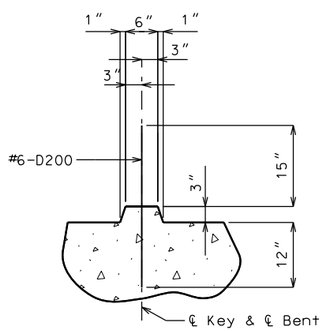

TYPICAL SECTION
THRU KEY

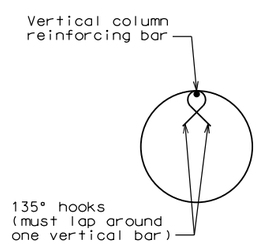

DETAIL OF SEISMIC
STIRRUP BAR

Substructure Quantity Table for Bent No. 2		
Item		Quantity
Drilled Shafts (3'-6" Dia.)	linear foot	24
Rock Sockets (3'-0" Dia.)	linear foot	24
Supplementary Television Camera Inspection	each	3
Supplementary Foundation Test Holes (Nx)	linear foot	54
Concrete Coring	linear foot	51
Sonic Logging Testing	each	3
Class B Concrete (substructure)	cu. yard	38.5
✳ Reinforcing Steel	lbs.	14,680

Cost of any excavation required for construction of Drilled Shafts will be considered completely covered by the Contract Unit Price for Drilled Shafts (3'-6" Dia.)

Note:
These quantities are included in the estimated quantities table on sheet no. 2.

✳ All reinforcement in the Drilled Shafts and Rock Sockets are included in the Substructure Quantities. An additional 48 inches has been added to V200 and P200 bar lengths for possible change in shaft depth. This excess length shall be cut off if not required.

The contract unit price for "Drilled Shafts (3'-6" Ø)" shall be full compensation for construction of the drilled shafts including Class B2 Concrete and Permanent Casing within the pay limits shown here and Sheet No. 2. The contract price does not include reinforcing steel.

The contract unit price for "Rock Sockets (3'-0" Ø)" shall be full compensation for construction of the rock sockets including Class B2 Concrete within the pay limits shown here and Sheet No. 2. The contract price does not include reinforcing steel.

Sonic logging testing shall be performed on all drilled shafts and rock sockets.

Concrete Coring, if needed, will be per Standard Specifications Section 109.15 Fixed Cost Items.

DETAILS OF INTERMEDIATE BENT NO. 2

Detailed Jan 2016
Checked Jan 2016

Note: This drawing is not to scale. Follow dimensions.

STATE OF MISSOURI
STEPHEN M. SEMPER
NUMBER E-24698
REGISTERED PROFESSIONAL ENGINEER

DATE PREPARED	1/20/2016
STATE	MO
SHEET NO.	24
ROUTE	STROUP
COUNTY	JEFFERSON
JOB NO.	13-0079
PROJECT NO.	STP-5403 (656)
BRIDGE NO.	24700121

DESCRIPTION

DATE

IF A SEAL IS PRESENT ON THIS SHEET IT HAS BEEN ELECTRONICALLY SEALED AND DATED.

JEFFERSON COUNTY PUBLIC WORKS
DEPARTMENT
P.O. BOX 100
HILLSBORO, MO 63050
(636-797-5340) PHONE
(636-797-5565) FAX

ABNA
4140 LINDELL BOULEVARD
ST. LOUIS, MO 63108
PH. 314-454-0222
CERTIFICATE/LICENSE NO. 001501

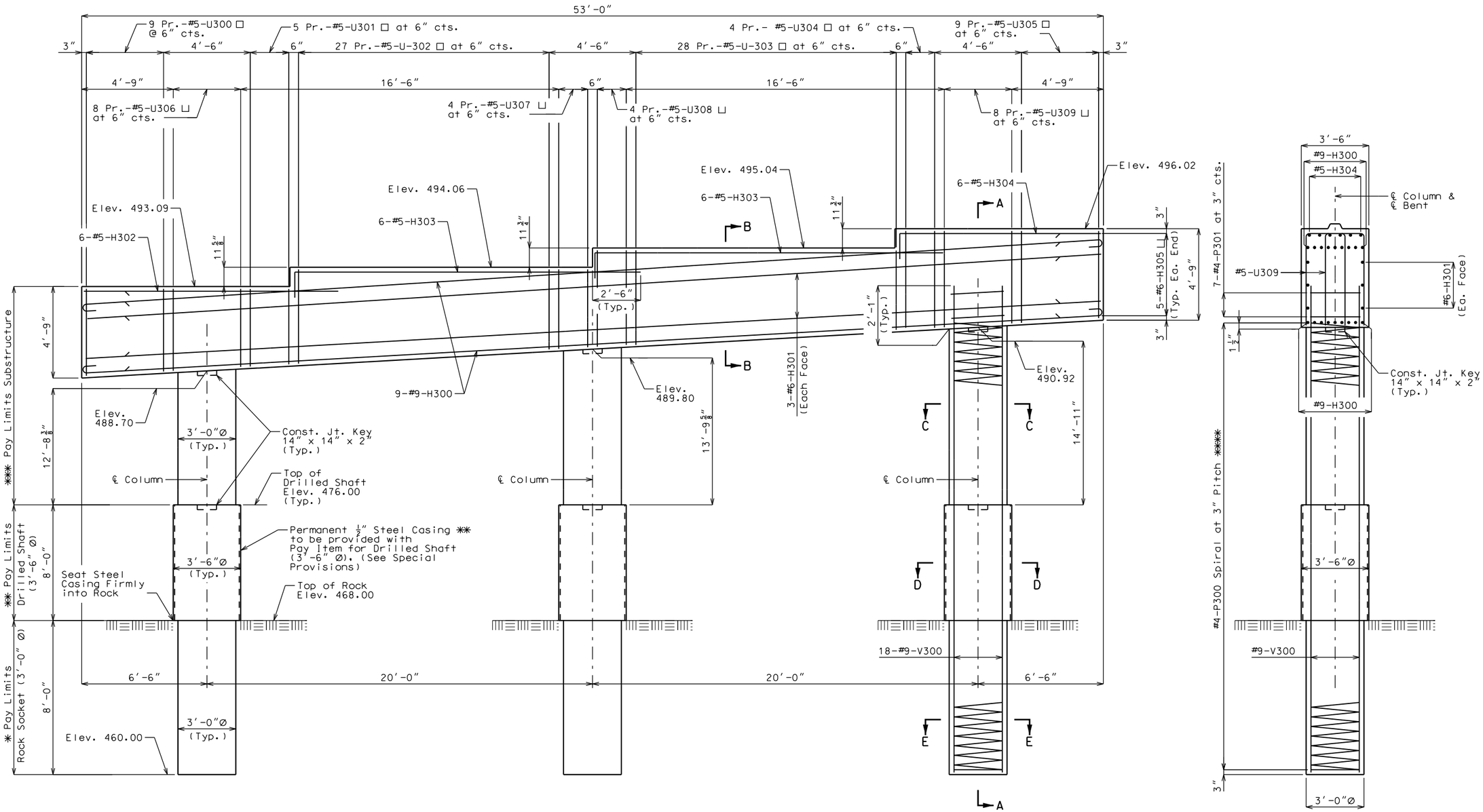

ELEVATION
(Looking up Station)
Note: 6"x3" Key not shown for clarity.

SECTION A-A

Notes:

For details of Intermediate Bent No. 3 not shown, see Sheets No. 12 and 13.

For Substructure Quantity Table for Bent No. 3, see Sheet No. 13.

* Indicates Pay Limits for Rock Socket (3'-0" Ø)

** Indicates Pay Limits for Drilled Shaft (3'-6" Ø) (Permanent Casing to be Provided)

*** Indicates Pay limits for Substructure

**** The spiral bars shall be continued for a distance of 1½" from the column connection into the beam cap.

DETAILS OF INTERMEDIATE BENT NO. 3

Detailed Jan 2016
Checked Jan 2016

Note: This drawing is not to scale. Follow dimensions.

STATE OF MISSOURI
STEPHEN M. SEELY
NUMBER E-24688
REGISTERED PROFESSIONAL ENGINEER

DATE PREPARED	1/20/2016
STATE	MO
SHEET NO.	25
ROUTE	STROUP
COUNTY	JEFFERSON
JOB NO.	13-0079
PROJECT NO.	STP-5403 (656)
BRIDGE NO.	24700121

DESCRIPTION

DATE

JEFFERSON COUNTY PUBLIC WORKS DEPARTMENT
P.O. BOX 100
HILLSBORO, MO 63050
(636-797-5340) PHONE
(636-797-5565) FAX

ABNA
4140 LINDELL BOULEVARD
ST. LOUIS, MO 63108
PH. 314-454-0222
CERTIFICATE/LICENSE NO. 001501

IF A SEAL IS PRESENT ON THIS SHEET IT HAS BEEN ELECTRONICALLY SEALED AND DATED.

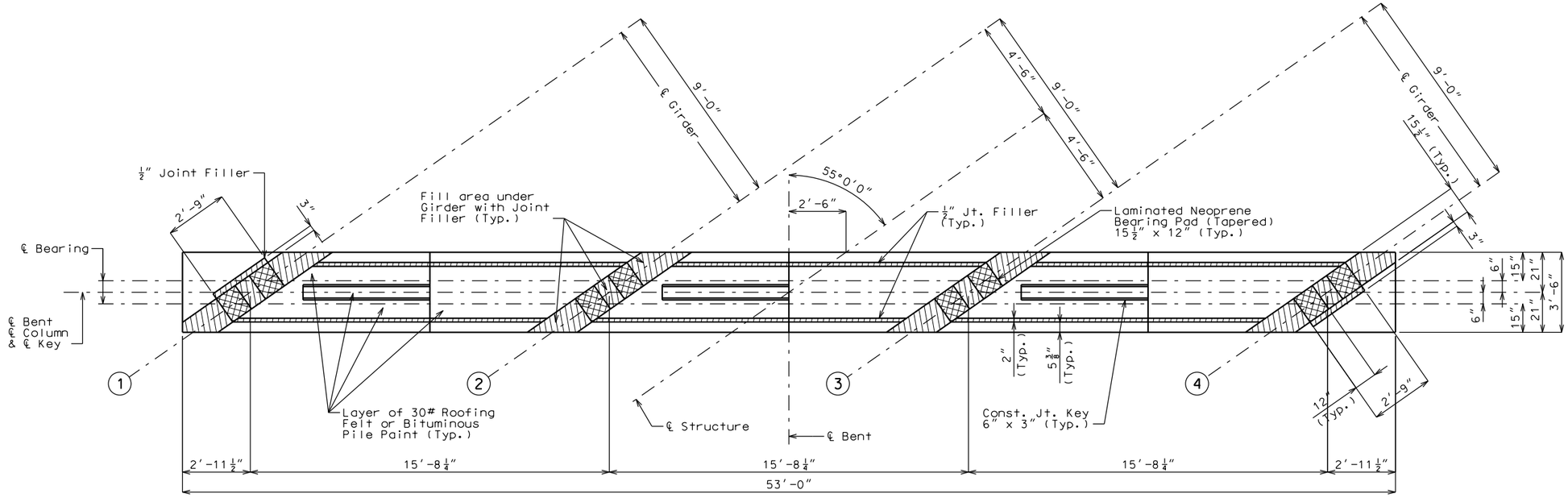

PART PLAN OF BEAM

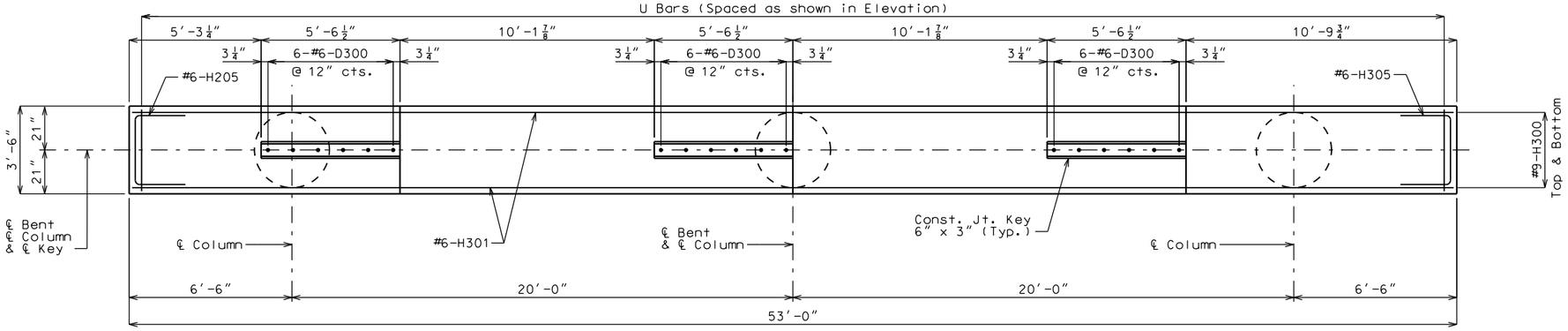

PART PLAN SHOWING REINFORCEMENT

Notes:

For details of Intermediate Bent No. 3 not shown, see Sheets No. 11 and 13.

DETAILS OF INTERMEDIATE BENT NO. 3

Detailed Jan 2016
Checked Jan 2016

Note: This drawing is not to scale. Follow dimensions.

STATE OF MISSOURI
STEPHEN M. SEELY
NUMBER
E-24698
REGISTERED PROFESSIONAL ENGINEER

DATE PREPARED	1/20/2016
STATE	MO
SHEET NO.	26
ROUTE	STROUP
COUNTY	JEFFERSON
JOB NO.	13-0079
PROJECT NO.	STP-5403 (656)
BRIDGE NO.	24700121

DATE	DESCRIPTION

JEFFERSON COUNTY PUBLIC WORKS DEPARTMENT
P.O. BOX 100
HILLSBORO, MO 63050
(636-797-5340) PHONE
(636-797-5565) FAX

ABNA
4140 LINDELL BOULEVARD
ST. LOUIS, MO 63108
PH. 314-454-0222
CERTIFICATE/LICENSE NO. 001501

IF A SEAL IS PRESENT ON THIS SHEET IT HAS BEEN ELECTRONICALLY SEALED AND DATED.

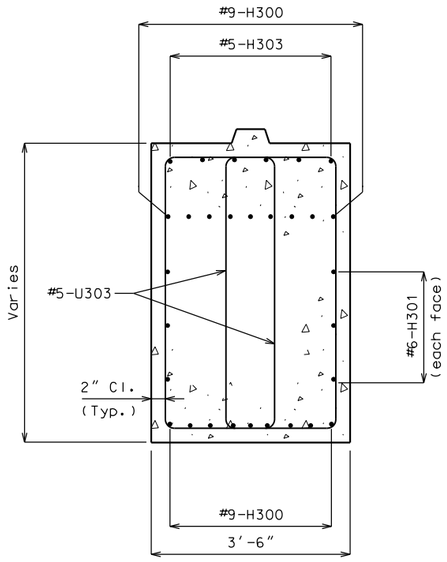

SECTION B-B

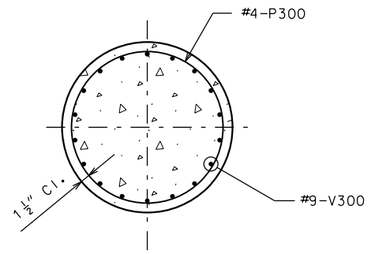

SECTION C-C

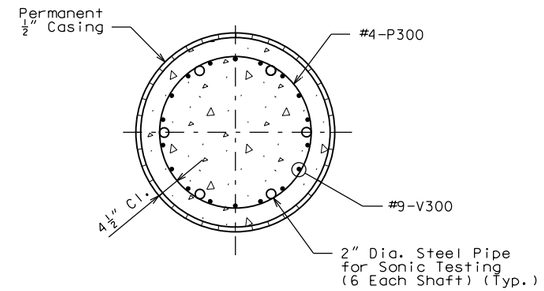

SECTION D-D

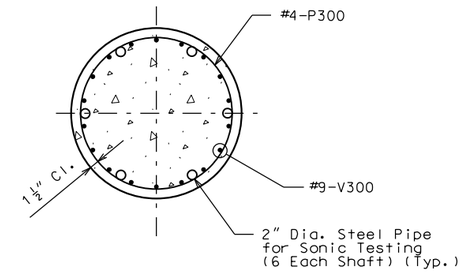

SECTION E-E

Note: Steel pipe shall be placed as shown from bottom of shaft to 12" above permanent casing.

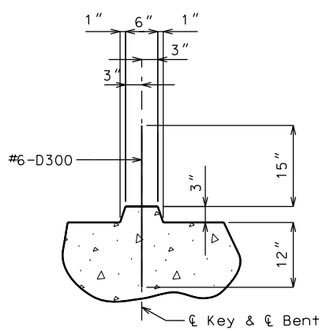

TYPICAL SECTION
THRU KEY

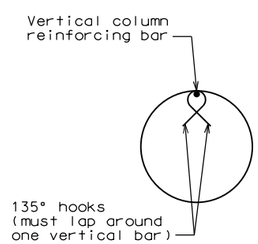

DETAIL OF SEISMIC
STIRRUP BAR

Substructure Quantity Table for Bent No. 3		
Item		Quantity
Drilled Shafts (3'-6" Dia.)	linear foot	24
Rock Sockets (3'-0" Dia.)	linear foot	24
Supplementary Television Camera Inspection	each	3
Supplementary Foundation Test Holes (Nx)	linear foot	54
Concrete Coring	linear foot	51
Sonic Logging Testing	each	3
Class B Concrete (substructure)	cu. yard	43.5
✳ Reinforcing Steel	lbs.	16,330

Cost of any excavation required for construction of Drilled Shafts will be considered completely covered by the Contract Unit Price for Drilled Shafts (3'-6" Dia.)

Note:
These quantities are included in the estimated quantities table on sheet no. 2.

✳ All reinforcement in the Drilled Shafts and Rock Sockets are included in the Substructure Quantities. An additional 48 inches has been added to V300 and P300 bar lengths for possible change in shaft depth. This excess length shall be cut off if not required.

The contract unit price for "Drilled Shafts (3'-6" Ø)" shall be full compensation for construction of the drilled shafts including Class B2 Concrete and Permanent Casing within the pay limits shown here and Sheet No. 2. The contract price does not include reinforcing steel.

The contract unit price for "Rock Sockets (3'-0" Ø)" shall be full compensation for construction of the rock sockets including Class B2 Concrete within the pay limits shown here and Sheet No. 2. The contract price does not include reinforcing steel.

Sonic logging testing shall be performed on all drilled shafts and rock sockets.

Concrete Coring, if needed, will be per Standard Specifications Section 109.15 Fixed Cost Items.

DETAILS OF INTERMEDIATE BENT NO. 3

Detailed Jan 2016
Checked Jan 2016

Note: This drawing is not to scale. Follow dimensions.

STATE OF MISSOURI
STEPHEN M. SEMPER
NUMBER E-24698
REGISTERED PROFESSIONAL ENGINEER

DATE PREPARED	
1/20/2016	
STATE	SHEET NO.
MO	27
ROUTE	
STROUP	
COUNTY	
JEFFERSON	
JOB NO.	
13-0079	
PROJECT NO.	
STP-5403 (656)	
BRIDGE NO.	
24700121	

DATE	DESCRIPTION

IF A SEAL IS PRESENT ON THIS SHEET IT HAS BEEN ELECTRONICALLY SEALED AND DATED.

JEFFERSON COUNTY PUBLIC WORKS
DEPARTMENT
P.O. BOX 100
HILLSBORO, MO 63050
(636-797-5340) PHONE
(636-797-5565) FAX

ABNA
4140 LINDELL BOULEVARD
ST. LOUIS, MO 63108
PH. 314-454-0222
CERTIFICATE/LICENSE NO. 001501

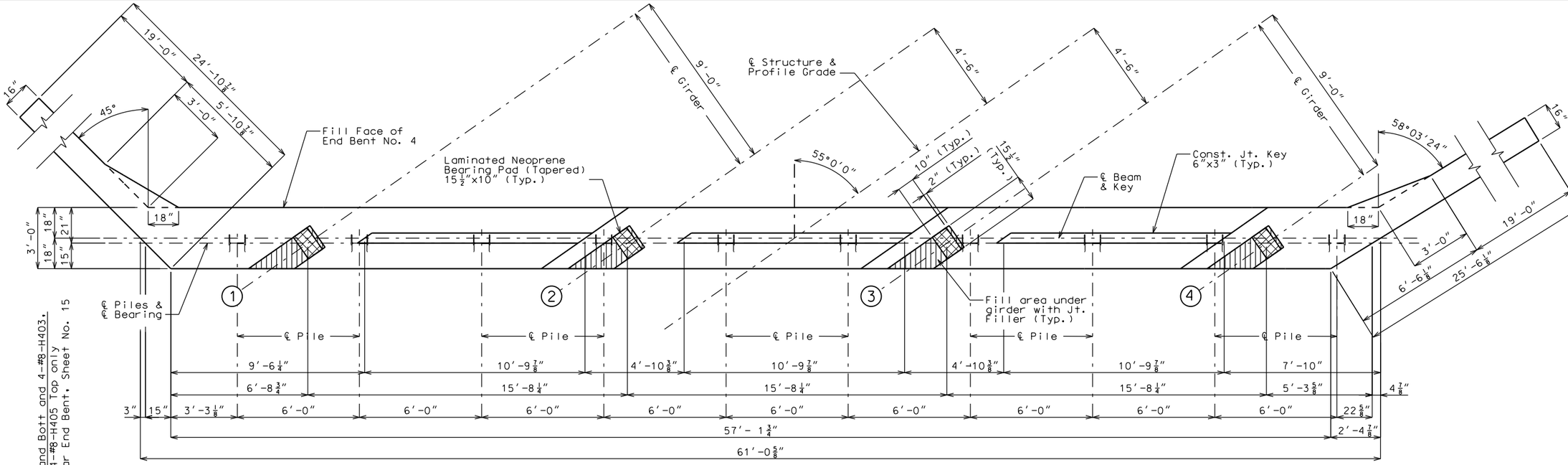

PLAN OF BEAM SHOWING DIMENSIONS

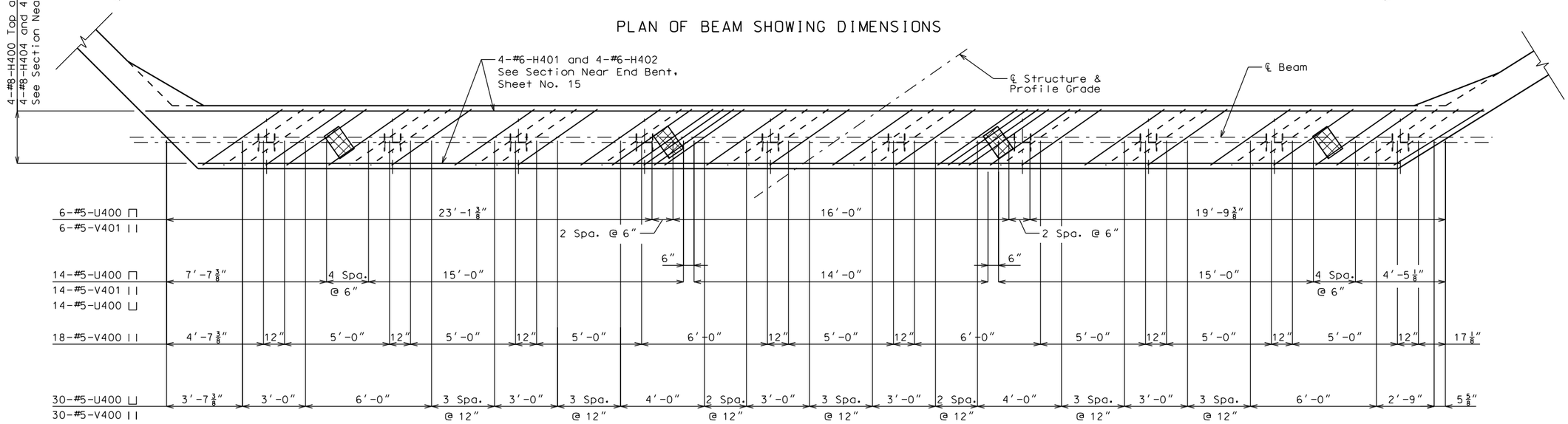

PLAN OF BEAM SHOWING REINFORCEMENT

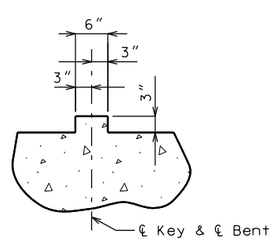

TYPICAL SECTION THRU KEY

Notes:

For details of End Bent No. 4 not shown, see Sheets No 15 and 16.

For details of Pile Anchors, see Sheet No. 2.

For details of Steel Pile Splice, see Sheet No. 2.

For details of Vertical Drain at End Bents, see Sheet No. 7.

All vertical reinforcing bars in the substructure beams or caps shall be field adjusted to clear piles by at least 1 1/2".

Substructure Quantity Table for End Bent No. 4		
Item		Quantity
Class 1 Excavation ✳	cu. yard	41.0
Structural Steel Pile (12 in.) ✳	linear foot	349
Prebore for Piling	linear foot	289
Setting Piles in Rock	each	5.0
Class B Concrete (substructure) ✳	cu. yard	89.6

Note: These quantities are included in the estimated quantities table on sheet no. 2.

✳ Includes Detached Wing Wall

DETAILS OF END BENT NO. 4

Detailed Jan 2016
Checked Jan 2016

Note: This drawing is not to scale. Follow dimensions.

STATE OF MISSOURI
STEPHEN M. SEIBERT
NUMBER E-24698
REGISTERED PROFESSIONAL ENGINEER

DATE PREPARED	1/20/2016
STATE	MO
SHEET NO.	28
ROUTE	STROUP
COUNTY	JEFFERSON
JOB NO.	13-0079
PROJECT NO.	STP-5403 (656)
BRIDGE NO.	24700121

DATE	DESCRIPTION

JEFFERSON COUNTY PUBLIC WORKS DEPARTMENT
P.O. BOX 100
HILLSBORO, MO 63050
(636-797-5340) PHONE
(636-797-5565) FAX

ABNA
4140 LINDELL BOULEVARD
ST. LOUIS, MO 63108
PH. 314-454-0222
CERTIFICATE/LICENSE NO. 001501

IF A SEAL IS PRESENT ON THIS SHEET IT HAS BEEN ELECTRONICALLY SEALED AND DATED.

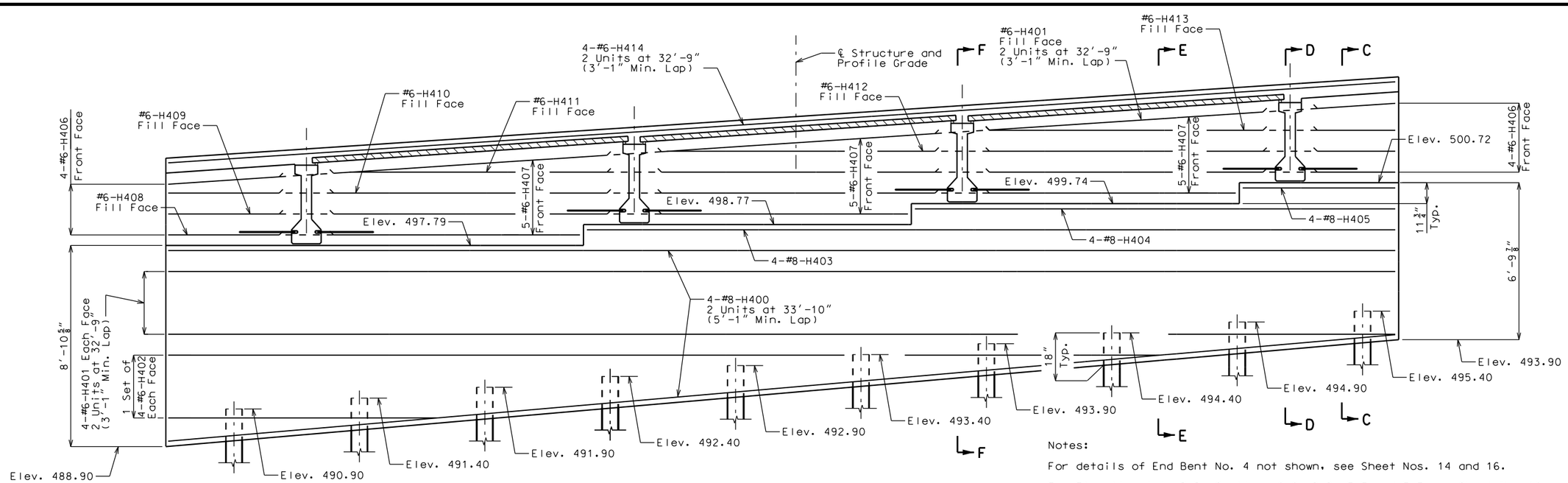

SECTION NEAR END BENT

(Looking Up Station)

Note: Construction joint key 6"x3" not shown.

Notes:

For details of End Bent No. 4 not shown, see Sheet Nos. 14 and 16.

For Elevation A-A, B-B, Sections C-C, D-D, E-E and F-F see Sheet No. 16.

Bend #6 F bars in field to clear girders.

All strands at end of girders shall be field bent or, if necessary, cut in field to maintain 1 1/2" minimum clearance to fill face of end bent.

For location of coil tie rods and #5-H105 (Strand Tie Bars), see Sheet No. 19.

All concrete in the end bent above top of beam and below top of slab shall be Class B-2.

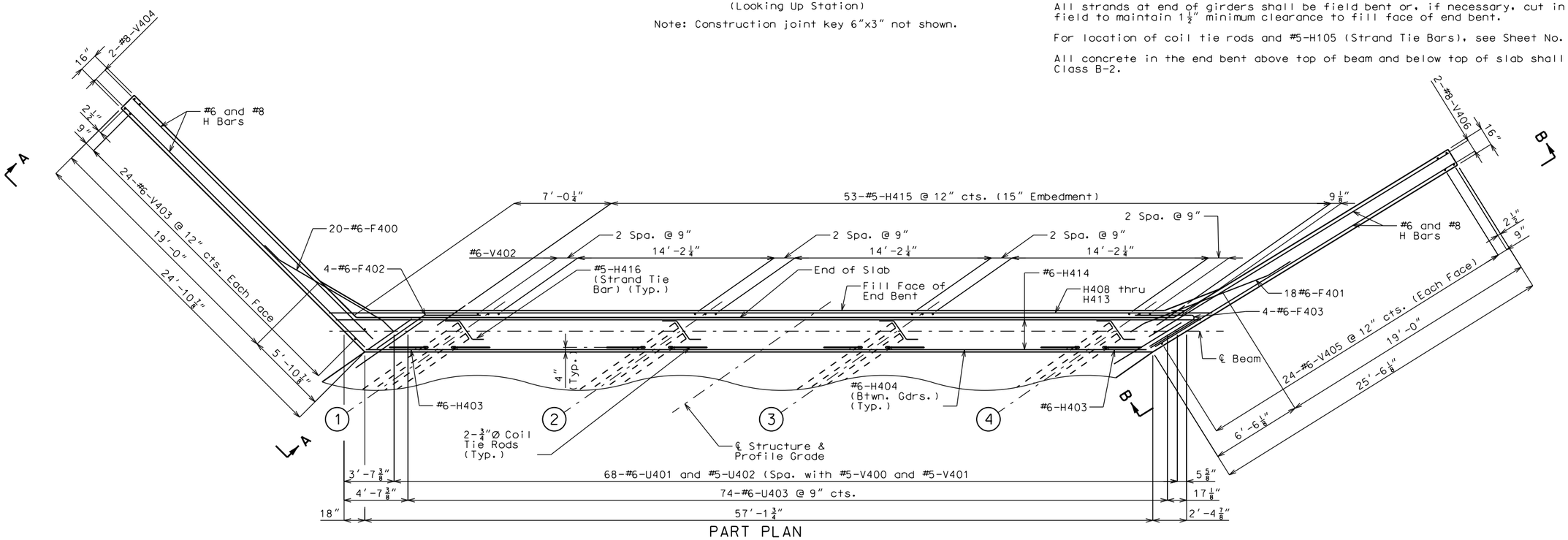

PART PLAN

DETAILS OF END BENT NO. 4

Note: This drawing is not to scale. Follow dimensions.

Detailed Jan 2016
Checked Jan 2016

Sheet No. 15 of 38

STATE OF MISSOURI
STEPHEN M. SEELY
NUMBER E-24698
REGISTERED PROFESSIONAL ENGINEER

DATE PREPARED	1/20/2016
STATE	MO
SHEET NO.	29
ROUTE	STROUP
COUNTY	JEFFERSON
JOB NO.	13-0079
PROJECT NO.	STP-5403 (656)
BRIDGE NO.	24700121

DATE	DESCRIPTION

IF A SEAL IS PRESENT ON THIS SHEET IT HAS BEEN ELECTRONICALLY SEALED AND DATED.

JEFFERSON COUNTY PUBLIC WORKS DEPARTMENT
P.O. BOX 100
HILLSBORO, MO 63050
(636-797-5340) PHONE
(636-797-5565) FAX

ABNA
4140 LINDELL BOULEVARD
ST. LOUIS, MO 63108
PH. 314-454-0222
CERTIFICATE/LICENSE NO. 001501

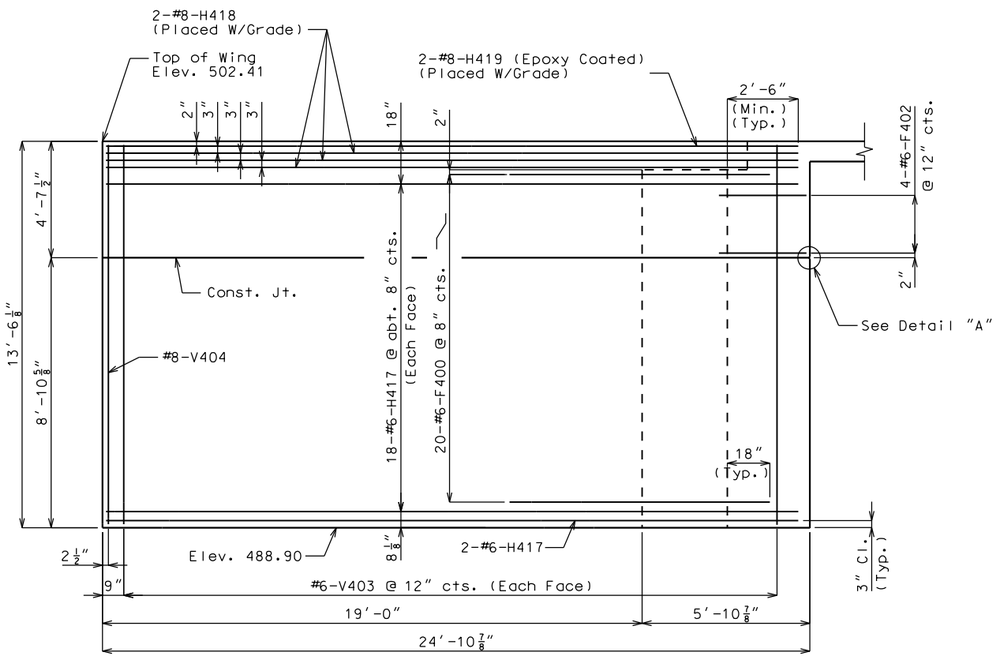

ELEVATION A-A

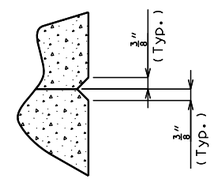

DETAIL "A"

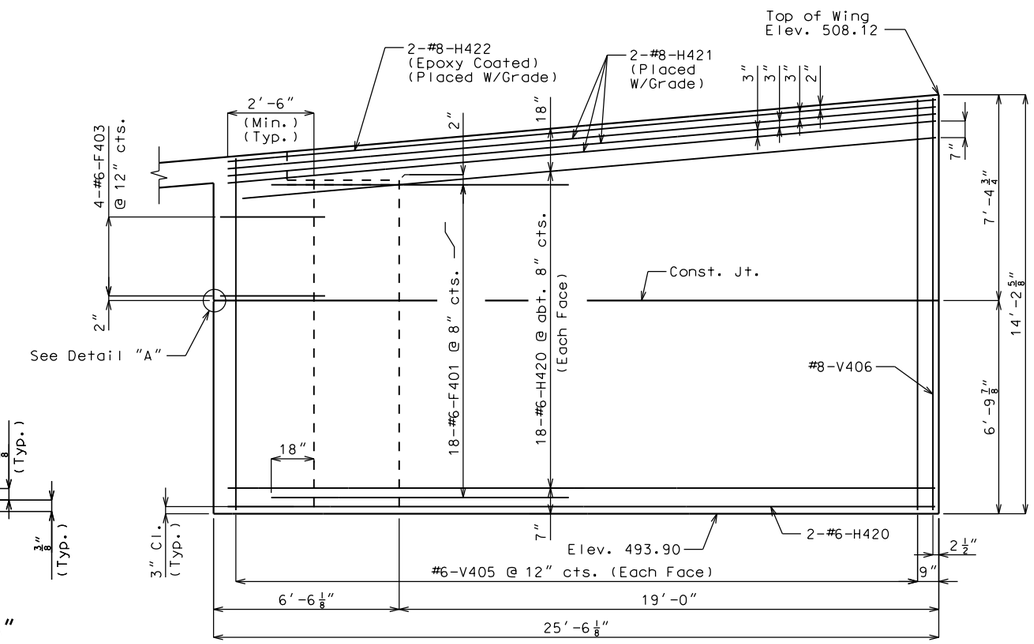

ELEVATION B-B

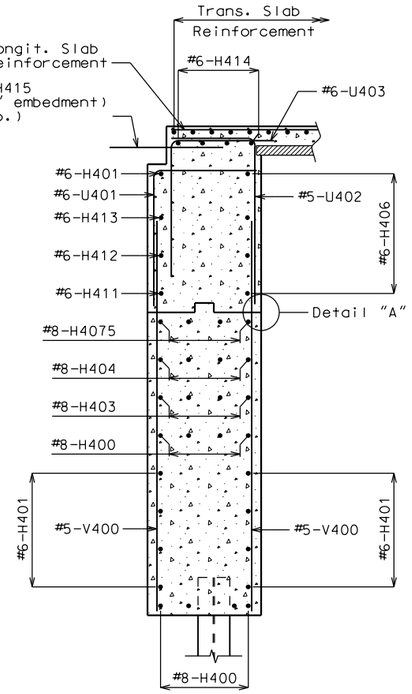

SECTION C-C

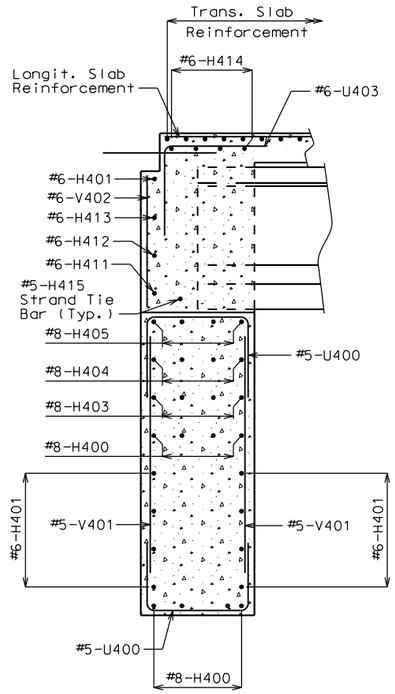

SECTION D-D

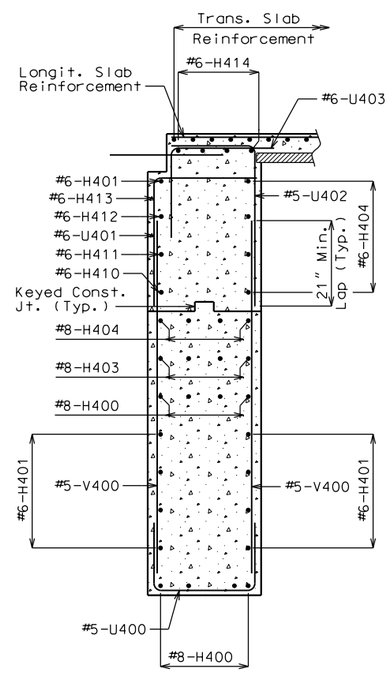

SECTION E-E

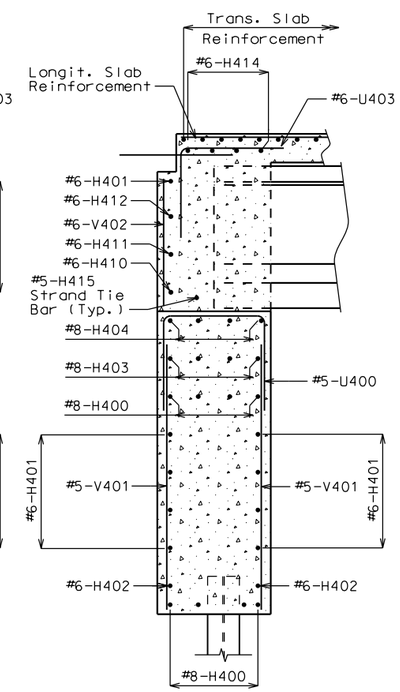

SECTION F-F

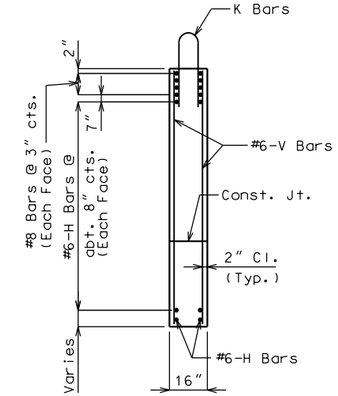

PART SECTION
THRU WING

Notes:

For details of End Bent No. 4 not shown, see Sheet Nos. 14 and 15.

For location of Elevations A-A, B-B and Sections C-C, D-D, E-E and F-F see Sheet No. 15.

Bend #6 F bars in field to clear girders.

For location and details of K bars, see Sheet No. 31.

Detailed Jan 2016
Checked Jan 2016

Note: This drawing is not to scale. Follow dimensions.

Sheet No. 16 of 38

STATE OF MISSOURI
STEPHEN M. SEELY
NUMBER
E-24698
REGISTERED PROFESSIONAL ENGINEER

DATE PREPARED	
1/20/2016	
STATE	SHEET NO.
MO	30
ROUTE	
STROUP	
COUNTY	
JEFFERSON	
JOB NO.	
13-0079	
PROJECT NO.	
STP-5403 (656)	
BRIDGE NO.	
24700121	

DATE	DESCRIPTION

IF A SEAL IS PRESENT ON THIS SHEET IT HAS BEEN ELECTRONICALLY SEALED AND DATED.

JEFFERSON COUNTY PUBLIC WORKS
DEPARTMENT
P.O. BOX 100
HILLSBORO, MO 63050
(636-797-53401 PHONE
(636-797-5565) FAX

ABNA
4140 LINDELL BOULEVARD
ST. LOUIS, MO 63108
PH. 314-454-0222
CERTIFICATE/LICENSE NO. 001501

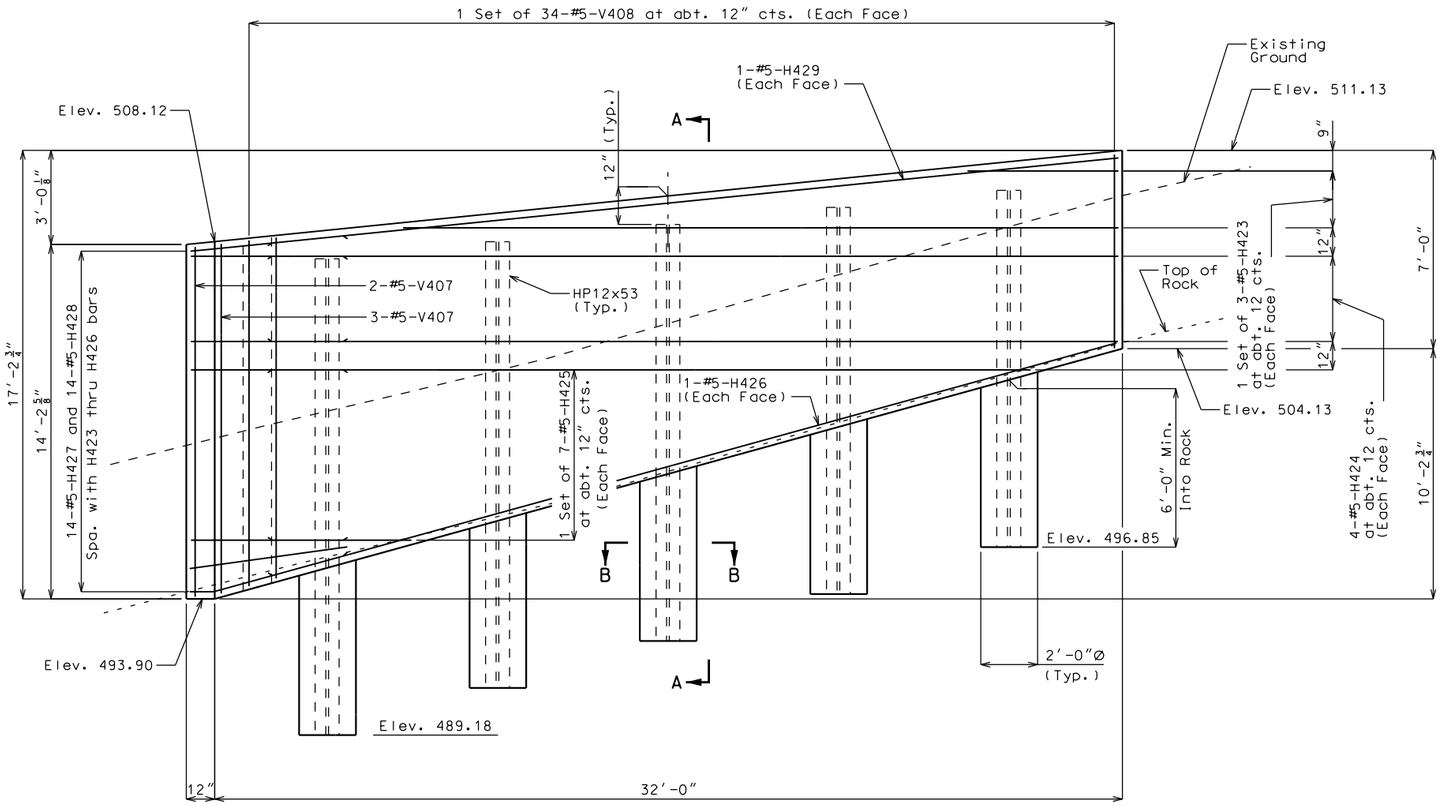

ELEVATION

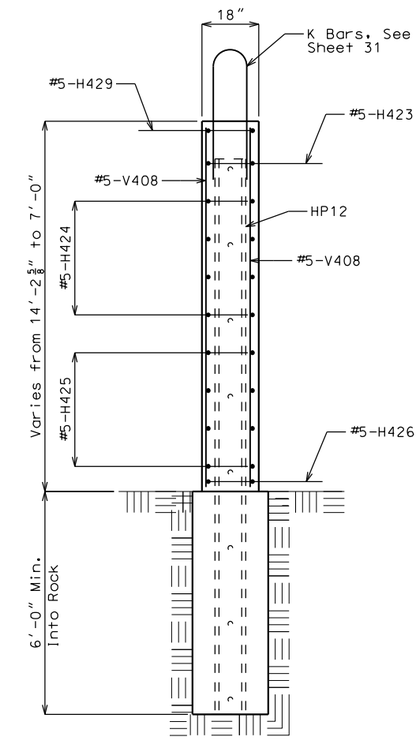

SECTION A-A

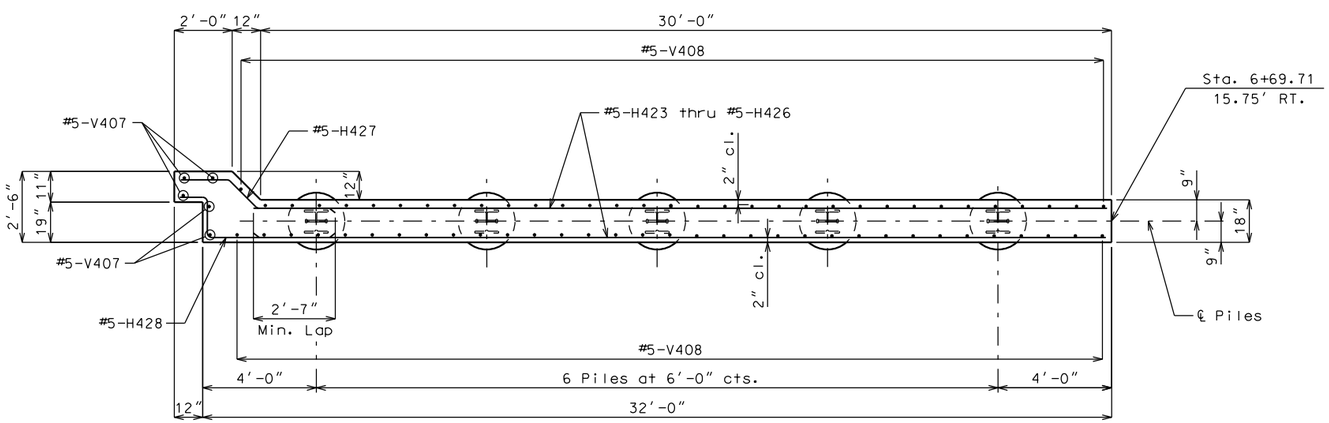

PLAN

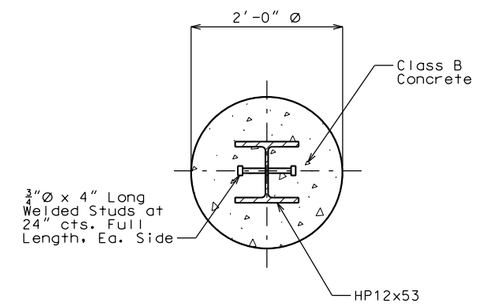

SECTION B-B

Cost of Shear Studs in place will be considered completely covered by the contract unit price for Structural Steel Piles 12"

DETACHED WINGWALL AT END BENT 4

Detailed Jan 2016
Checked Jan 2016

Note: This drawing is not to scale. Follow dimensions.

STATE OF MISSOURI
STEPHEN M. SEMPEK
NUMBER E-24688
REGISTERED PROFESSIONAL ENGINEER

DATE PREPARED	1/20/2016
STATE	MO
SHEET NO.	31
ROUTE	STROUP
COUNTY	JEFFERSON
JOB NO.	13-0079
PROJECT NO.	STP-5403 (656)
BRIDGE NO.	24700121

DESCRIPTION

DATE

IF A SEAL IS PRESENT ON THIS SHEET IT HAS BEEN ELECTRONICALLY SEALED AND DATED.

JEFFERSON COUNTY PUBLIC WORKS DEPARTMENT
P.O. BOX 100
HILLSBORO, MO 63050
(636-797-5340) PHONE
(636-797-5565) FAX

ABNA
4140 LINDELL BOULEVARD
ST. LOUIS, MO 63108
PH. 314-454-0222
CERTIFICATE/LICENSE NO. 001501

Notes:
1. Bond Bearings to bearing beam with Epoxy Adhesive
2. Neoprene Elastormer Pads shall be 60 durometer

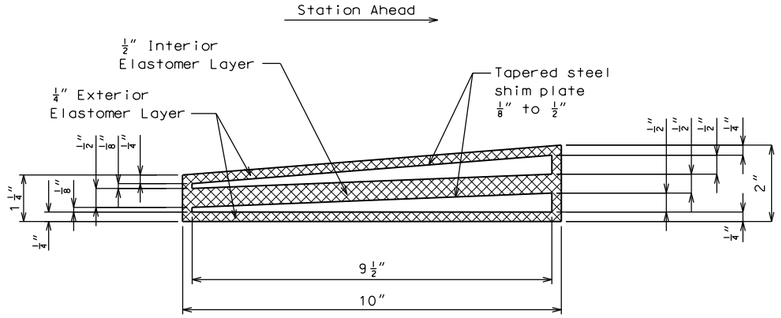

END BENT 1

No. Required = 4 Each

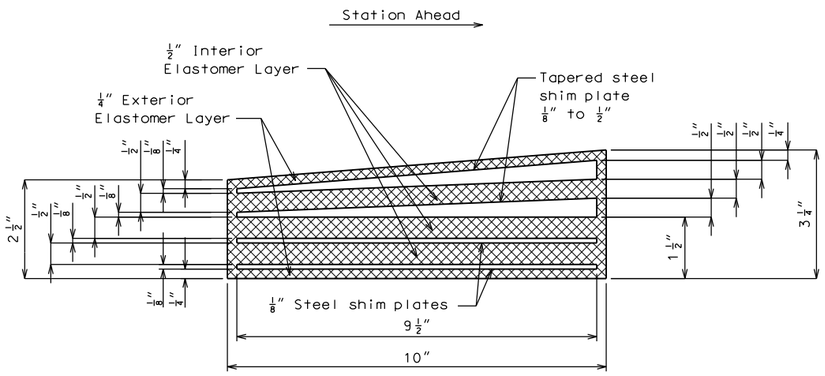

END BENT 4

No. Required = 4 Each

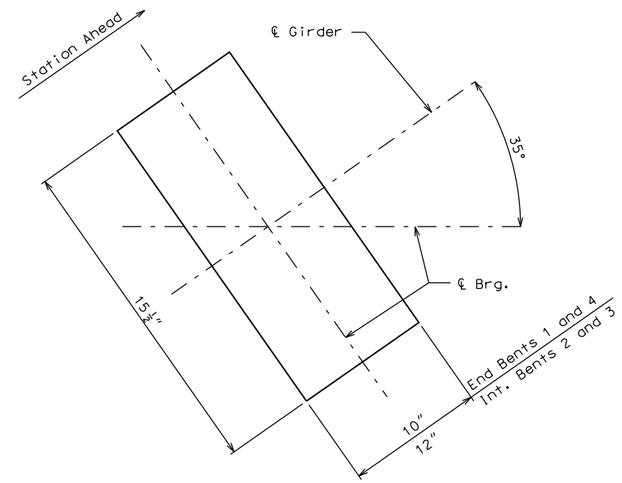

TYPICAL PLAN OF BEARINGS

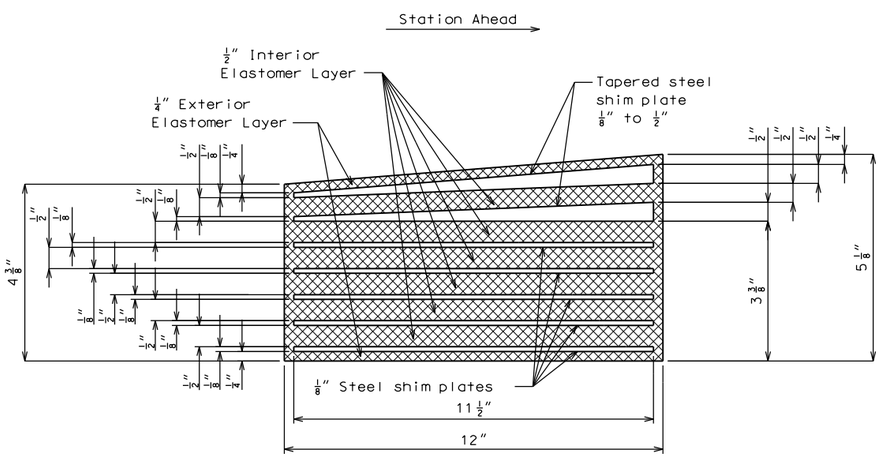

BENT 2 (SPAN 1)
BENT 3 (SPAN 2)

No. Required = 8 Each

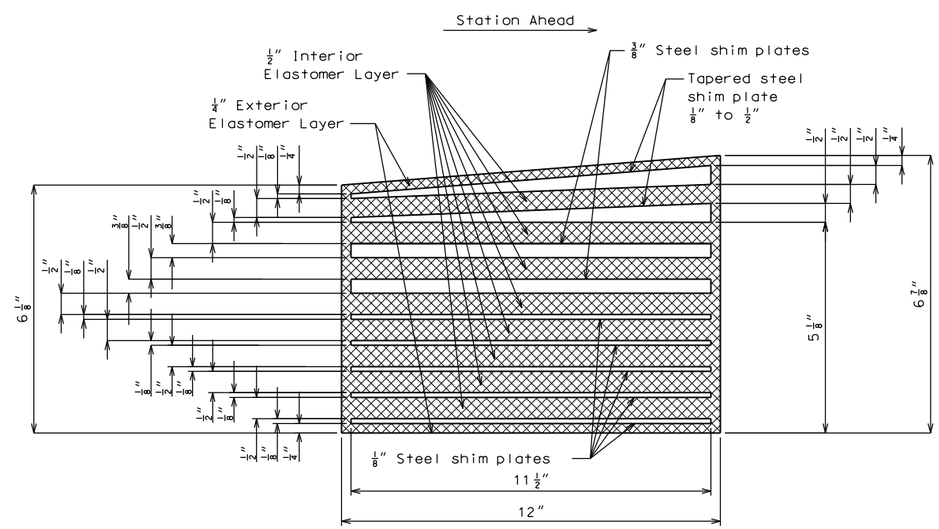

BENT 2 (SPAN 2)
BENT 3 (SPAN 3)

No. Required = 8 Each

LAMINATED NEOPRENE BEARING PAD DETAILS (TAPERED)

Note: This drawing is not to scale. Follow dimensions.

Detailed Jan 2016
Checked Jan 2016

Sheet No. 18 of 38

STATE OF MISSOURI
STEPHEN M. SEELE
NUMBER E-24698
REGISTERED PROFESSIONAL ENGINEER

DATE PREPARED	1/20/2016
STATE	MO
SHEET NO.	32
ROUTE	STROUP
COUNTY	JEFFERSON
JOB NO.	13-0079
PROJECT NO.	STP-5403 (656)
BRIDGE NO.	24700121

DATE	DESCRIPTION

IF A SEAL IS PRESENT ON THIS SHEET IT HAS BEEN ELECTRONICALLY SEALED AND DATED.

JEFFERSON COUNTY PUBLIC WORKS DEPARTMENT
P.O. BOX 100
HILLSBORO, MO 63050
(636-797-5340) PHONE
(636-797-5565) FAX

ABNA
4140 LINDELL BOULEVARD
ST. LOUIS, MO 63108
PH. 314-454-0222
CERTIFICATE/LICENSE NO. 001501

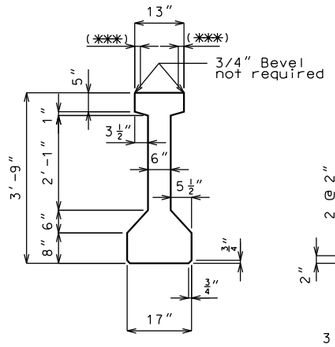

GIRDER DIMENSIONS

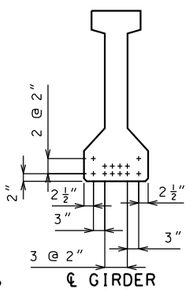

℄ GIRDER STRAND ARRANGEMENTS

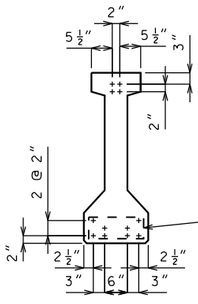

END OF GIRDER STRAND ARRANGEMENTS

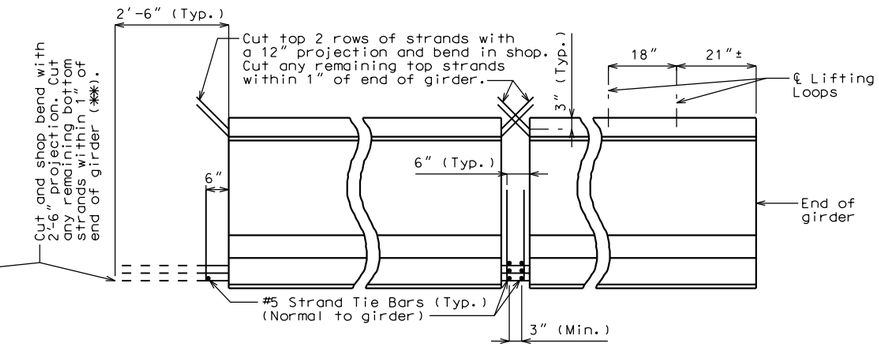

END BENT STRAND DETAILS AT GIRDER ENDS

INTERMEDIATE BENT LOCATION OF LIFTING LOOPS

Concrete for prestressed girders shall be Class A-1 with f'c = 6000 psi and f'ci = 4500 psi.

(+) indicates prestressing strand.

Use 12 strands with an initial prestress force of 372 kips.

Prestressing tendons shall be uncoated, seven-wire, low-relaxation strands, 1/2 inch diameter in accordance with AASHTO M 203, Grade 270. Pretensioned members shall be in accordance with Sec 1029.

** At the contractor's option the location for bent-up strands may be varied from that shown. The total number of bent-up strands shall not be changed. One strand tie bar is required for each layer of bent-up strands except at end bents which require one bar on the bottom layer of strands only. No additional payment will be made if additional strand tie bars are required.

*** At contractor's option a 1 1/2" to 1 3/4" smooth finish strip is permitted to facilitate placement of preformed fiber expansion joint material or expanded or extruded polystyrene bedding material for the prestressed panels.

BILL OF REINFORCING STEEL - EACH GIRDER				
NO.	SIZE & MARK	ACTUAL LENGTH	SHAPE	BENDING DIAGRAM
2	5 A1	48'-6"	20	
144	4 B1	5'-2"	11	
16	6 B2	4'-7"	11	
80	4 C1	13"	10	
160	4 D1	2'-7"	9	

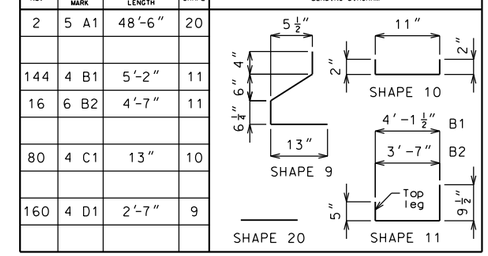

All dimensions are out to out.

Hooks and bends shall be in accordance with the CRSI Manual of Standard Practice for Detailing Reinforced Concrete Structures, Stirrup and Tie Dimensions.

Actual lengths are measured along centerline of bar to the nearest inch.

Minimum clearance to reinforcing shall be 1".

All reinforcement shall be Grade 60.

The two D1 bars may be furnished as one bar at the fabricator's option.

All B1 bars shall be epoxy coated.

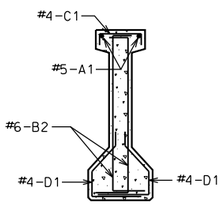

SECTION A-A
Strands not shown for clarity.

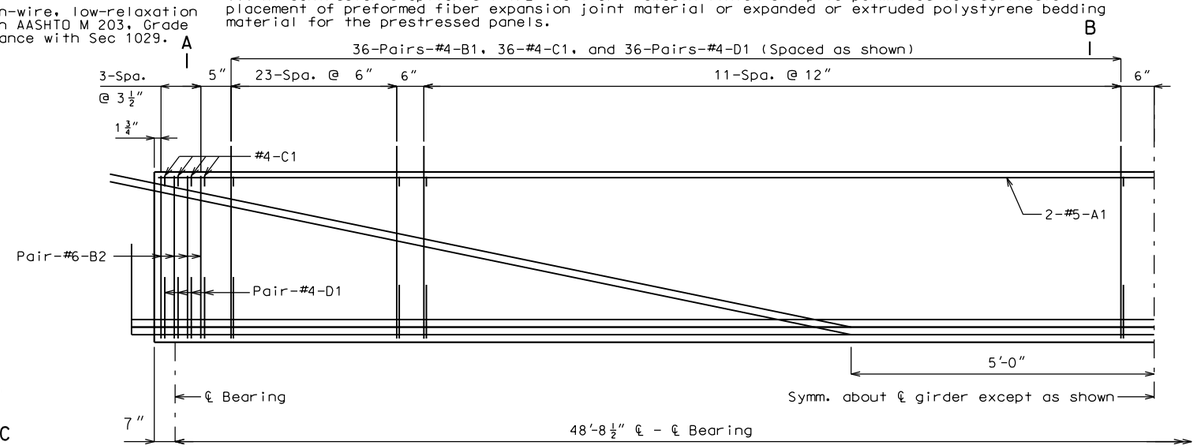

HALF ELEVATION OF GIRDER SPAN (1-2) and (3-4)

Exterior and interior girders are the same, except for coil ties and holes for steel intermediate diaphragms.

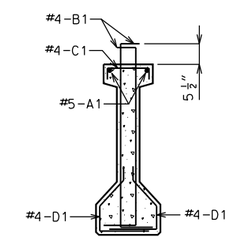

SECTION B-B
Strands not shown for clarity.

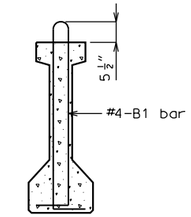

B1 BAR PERMISSIBLE ALTERNATE SHAPE

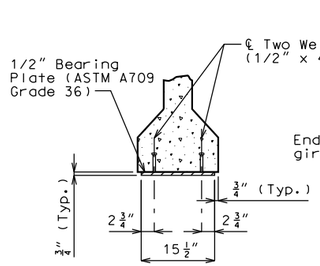

SECTION C-C

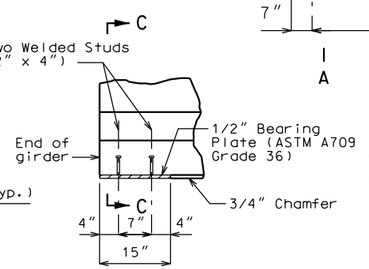

PART ELEVATION AT END OF GIRDER

BEARING PLATE DETAILS

Galvanize the 1/2" bearing plate (ASTM A709 Grade 36) in accordance with ASTM A123.

Cost of furnishing, galvanizing, and installing the 1/2" bearing plate (ASTM A709 Grade 36) and welded studs in the prestressed girder will be considered completely covered by the contract unit price for Prestressed Concrete I-Girder.

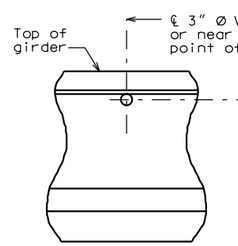

PART ELEVATION OF GIRDER

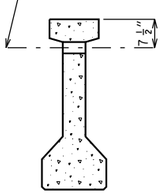

PART SECTION NEAR VENT HOLE

Place vent holes at or near upgrade 1/3 point of girders and clear reinforcing steel or strands by 1 1/2" minimum and steel intermediate diaphragm bolt connections by 6" minimum.

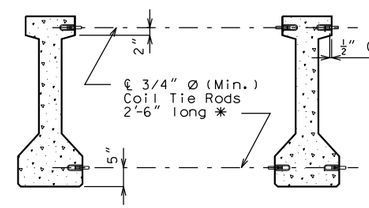

EXTERIOR GIRDERS AT INT. BENTS

EXTERIOR GIRDERS AT END BENTS
INTERIOR GIRDERS AT ALL BENTS

DETAILS OF COIL TIES

Cost of 3/4" Ø coil tie rods placed in diaphragms will be considered completely covered by the contract unit price for Prestressed Concrete I-Girder.

Coil ties shall be held in place in the forms by slotted wire-setting-studs projecting through forms. Studs are to be left in place or replaced with temporary plugs until girders are erected, then replaced by coil tie rods.

For location of coil inserts at slab drains, see Sheet No. 28.

For location of coil ties, see Sheets No. 22 & 23.

The 1 1/2" Ø holes shall be cast in the web for steel intermediate diaphragms. Drilling is not allowed.

For details of diaphragms, see Sheet No. 21.

For Girder Camber Diagram, see Sheet No. 25.

* Length of coil tie rods at exterior girders at end bents = 2'-0".

Detailed Jan 2016
Checked Jan 2016

Note: This drawing is not to scale. Follow dimensions.

STATE OF MISSOURI STEPHEN M. SEWELL NUMBER E-24698 REGISTERED PROFESSIONAL ENGINEER

DATE PREPARED 1/20/2016

STATE MO | SHEET NO. 33

ROUTE STROUP

COUNTY JEFFERSON

JOB NO. 13-0079

PROJECT NO. STP-5403 (656)

BRIDGE NO. 24700121

DATE	DESCRIPTION

IF A SEAL IS PRESENT ON THIS SHEET IT HAS BEEN ELECTRONICALLY SEALED AND DATED.

JEFFERSON COUNTY PUBLIC WORKS DEPARTMENT
P.O. BOX 100
HILLSBORO, MO 63050
(636-797-5340) PHONE
(636-797-5565) FAX

ABNA
4140 LINDELL BOULEVARD
ST. LOUIS, MO 63108
PH. 314-454-0222
CERTIFICATE/LICENSE NO. 001501

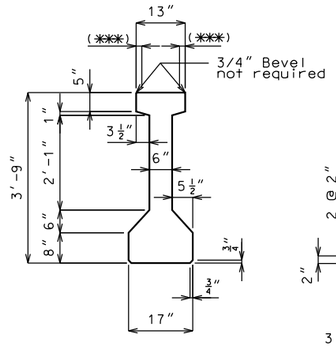

GIRDER DIMENSIONS

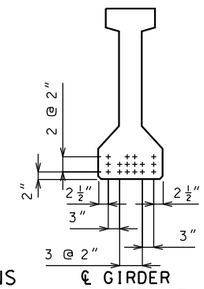

℄ GIRDER

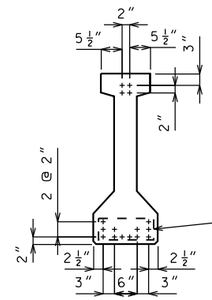

END OF GIRDER

STRAND ARRANGEMENTS

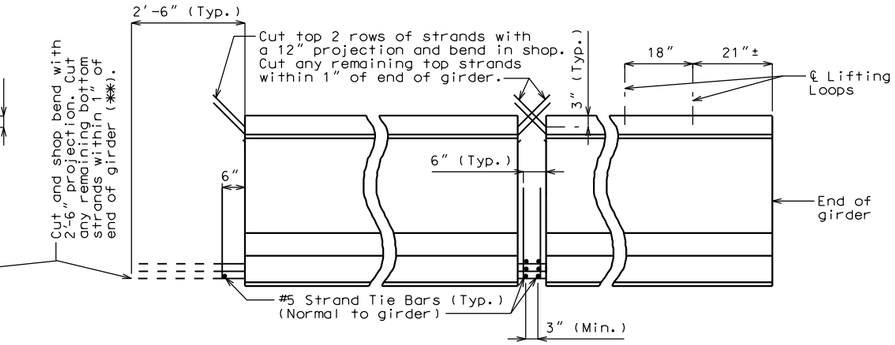

END BENT

STRAND DETAILS AT GIRDER ENDS

INTERMEDIATE BENT

LOCATION OF LIFTING LOOPS

Concrete for prestressed girders shall be Class A-1 with f'c = 6000 psi and f'ci = 4500 psi.

(+) indicates prestressing strand.

Use 16 strands with an initial prestress force of 496 kips.

Prestressing tendons shall be uncoated, seven-wire, low-relaxation strands, 1/2 inch diameter in accordance with AASHTO M 203, Grade 270. Pretensioned members shall be in accordance with Sec 1029.

** At the contractor's option the location for bent-up strands may be varied from that shown. The total number of bent-up strands shall not be changed. One strand tie bar is required for each layer of bent-up strands except at end bents which require one bar on the bottom layer of strands only. No additional payment will be made if additional strand tie bars are required.

*** At contractor's option a 1 1/2" to 1 3/4" smooth finish strip is permitted to facilitate placement of preformed fiber expansion joint material or expanded or extruded polystyrene bedding material for the prestressed panels.

BILL OF REINFORCING STEEL - EACH GIRDER

NO.	SIZE & MARK	ACTUAL LENGTH	SHAPE	BENDING DIAGRAM
4	5 A1	36'-3"	20	
192	5 B1	5'-2"	11	
16	6 B2	4'-7"	11	
104	4 C1	13"	10	
208	4 D1	2'-7"	9	

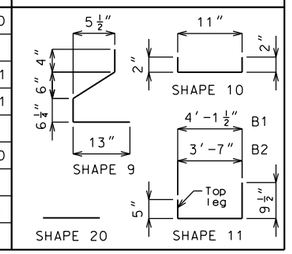

All dimensions are out to out.

Hooks and bends shall be in accordance with the CRSI Manual of Standard Practice for Detailing Reinforced Concrete Structures, Stirrup and Tie Dimensions.

Actual lengths are measured along centerline of bar to the nearest inch.

Minimum clearance to reinforcing shall be 1".

All reinforcement shall be Grade 60.

The two D1 bars may be furnished as one bar at the fabricator's option.

All B1 bars shall be epoxy coated.

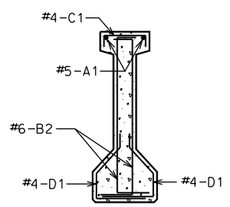

SECTION A-A

Strands not shown for clarity.

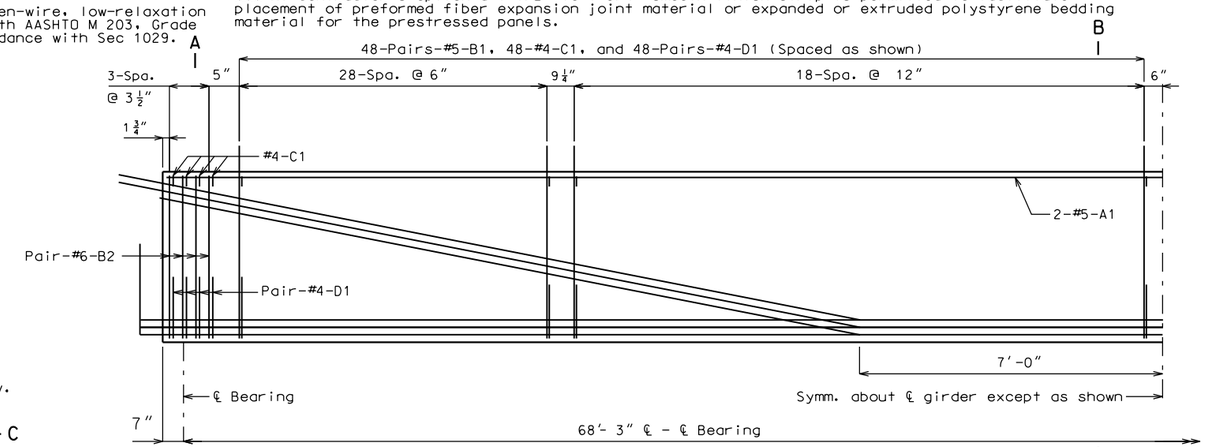

HALF ELEVATION OF GIRDER SPAN (2-3)

Exterior and interior girders are the same, except for coil ties and holes for steel intermediate diaphragms.

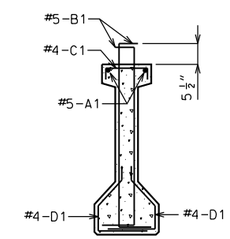

SECTION B-B

Strands not shown for clarity.

Cost of 3/4" Ø coil tie rods placed in diaphragms will be considered completely covered by the contract unit price for Prestressed Concrete I-Girder.

Coil ties shall be held in place in the forms by slotted wire-setting-studs projecting through forms. Studs are to be left in place or replaced with temporary plugs until girders are erected, then replaced by coil tie rods.

For location of coil inserts at slab drains, see Sheet No. 28.

For location of coil ties, see Sheets No. 22 & 23.

The 1 1/2" Ø holes shall be cast in the web for steel intermediate diaphragms. Drilling is not allowed.

For details of diaphragms, see Sheet No. 21.

For Girder Camber Diagram, see Sheet No. 25.

* Length of coil tie rods at exterior girders at end bents = 2'-0".

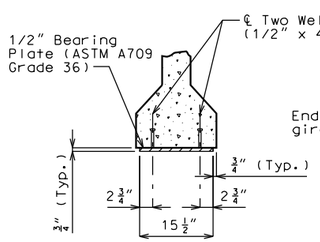

SECTION C-C

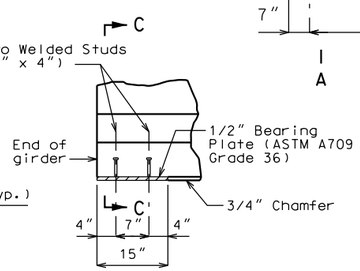

PART ELEVATION AT END OF GIRDER

BEARING PLATE DETAILS

Galvanize the 1/2" bearing plate (ASTM A709 Grade 36) in accordance with ASTM A123.

Cost of furnishing, galvanizing, and installing the 1/2" bearing plate (ASTM A709 Grade 36) and welded studs in the prestressed girder will be considered completely covered by the contract unit price for Prestressed Concrete I-Girder.

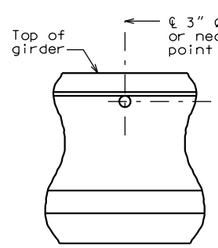

PART ELEVATION OF GIRDER

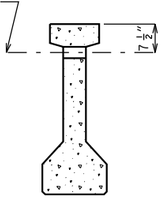

PART SECTION NEAR VENT HOLE

Place vent holes at or near upgrade 1/3 point of girders and clear reinforcing steel or strands by 1 1/2" minimum and steel intermediate diaphragm bolt connections by 6" minimum.

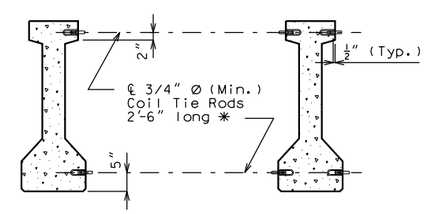

EXTERIOR GIRDERS AT INT. BENTS

EXTERIOR GIRDERS AT END BENTS INTERIOR GIRDERS AT ALL BENTS

DETAILS OF COIL TIES

Detailed Jan 2016
Checked Jan 2016

Note: This drawing is not to scale. Follow dimensions.

STATE OF MISSOURI
STEPHEN M. SEIBERT
NUMBER E-24698
REGISTERED PROFESSIONAL ENGINEER

DATE PREPARED	3/11/2016
STATE	MO
SHEET NO.	34
ROUTE	STROUP
COUNTY	JEFFERSON
JOB NO.	13-0079
PROJECT NO.	STP-5403 (656)
BRIDGE NO.	24700121

DATE	DESCRIPTION

JEFFERSON COUNTY PUBLIC WORKS DEPARTMENT
P.O. BOX 100
HILLSBORO, MO 63050
(636-797-5340) PHONE
(636-797-5565) FAX

ABNA
4140 LINDELL BOULEVARD
ST. LOUIS, MO 63108
PH. 314-454-0222
CERTIFICATE/LICENSE NO. 001501

IF A SEAL IS PRESENT ON THIS SHEET IT HAS BEEN ELECTRONICALLY SEALED AND DATED.

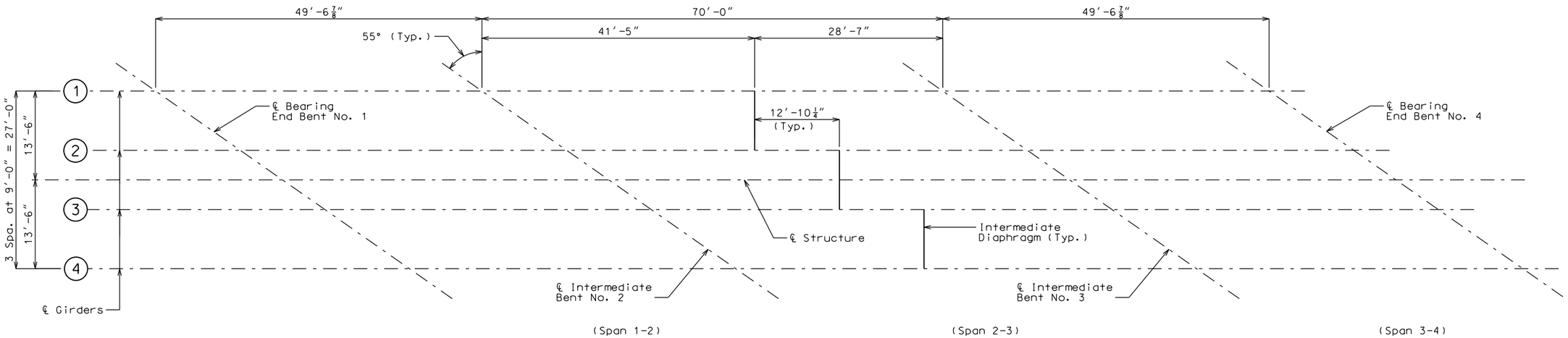

LOCATION OF INTERMEDIATE DIAPHRAGMS

Note: Longitudinal dimensions are measured horizontal.

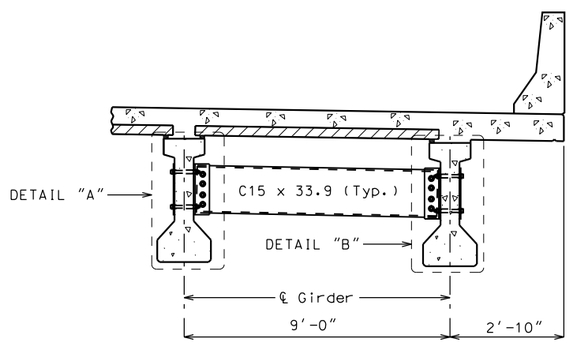

PART SECTION SHOWING INTERMEDIATE DIAPHRAGMS

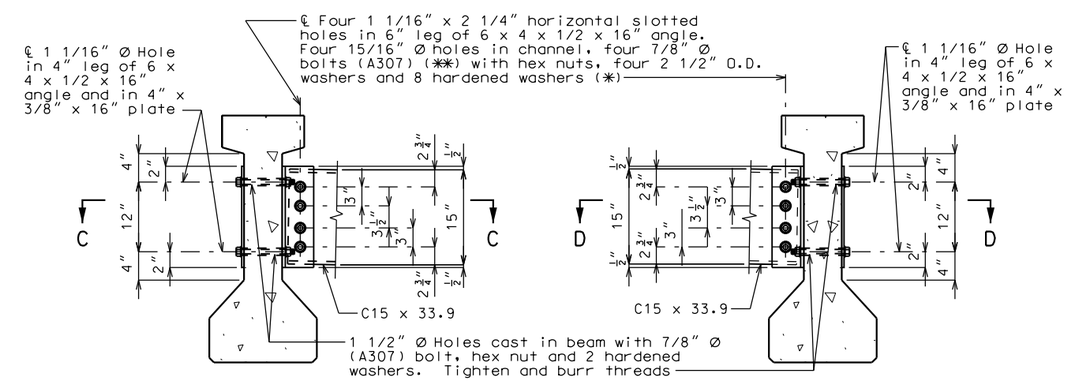

DETAIL "A" DETAIL "B"

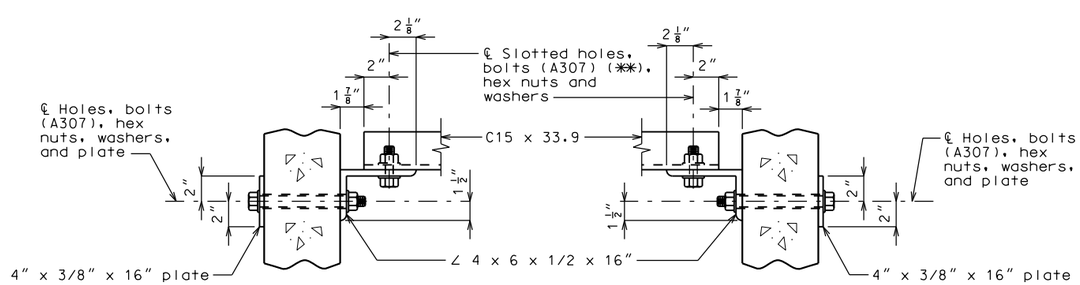

SECTION C-C SECTION D-D

STEEL DIAPHRAGM NOTES:

(✱) In lieu of 2 1/2" outside diameter washers, contractor may substitute a 3/16" (Min. thickness) plate with four 15/16" Ø holes and one hardened washer per bolt.

(✱✱) Bolts shall be tightened to provide a tension of one-half that specified in Sec 712 for high strength bolt installation. A325 bolts may be substituted for and installed in accordance with the requirements for the specified A307 bolts.

All diaphragm materials including bolts, nuts, and washers shall be galvanized.

Fabricated structural steel shall be ASTM A709 Grade 36 except as noted.

Payment for furnishing and installing steel intermediate diaphragms will be considered completely covered by the contract unit price for Steel Intermediate Diaphragm for P/S Concrete Girders.

Shop drawings will not be required for steel intermediate diaphragms and angle connections.

STEEL INTERMEDIATE DIAPHRAGM DETAILS

Detailed Jan 2016
Checked Jan 2016

Note: This drawing is not to scale. Follow dimensions.

Sheet No. 21 of 38

STATE OF MISSOURI
STEPHEN M. SEIBERT
NUMBER E-24698
REGISTERED PROFESSIONAL ENGINEER

DATE PREPARED	
1/20/2016	
STATE	SHEET NO.
MO	35
ROUTE	
STROUP	
COUNTY	
JEFFERSON	
JOB NO.	
13-0079	
PROJECT NO.	
STP-5403 (656)	
BRIDGE NO.	
24700121	

DESCRIPTION	DATE

IF A SEAL IS PRESENT ON THIS SHEET IT HAS BEEN ELECTRONICALLY SEALED AND DATED.

JEFFERSON COUNTY PUBLIC WORKS DEPARTMENT
P.O. BOX 100
HILLSBORO, MO 63050
(636-797-5340) PHONE
(636-797-5565) FAX

ABNA
4140 LINDELL BOULEVARD
ST. LOUIS, MO 63108
PH. 314-454-0222
CERTIFICATE/LICENSE NO. 001501

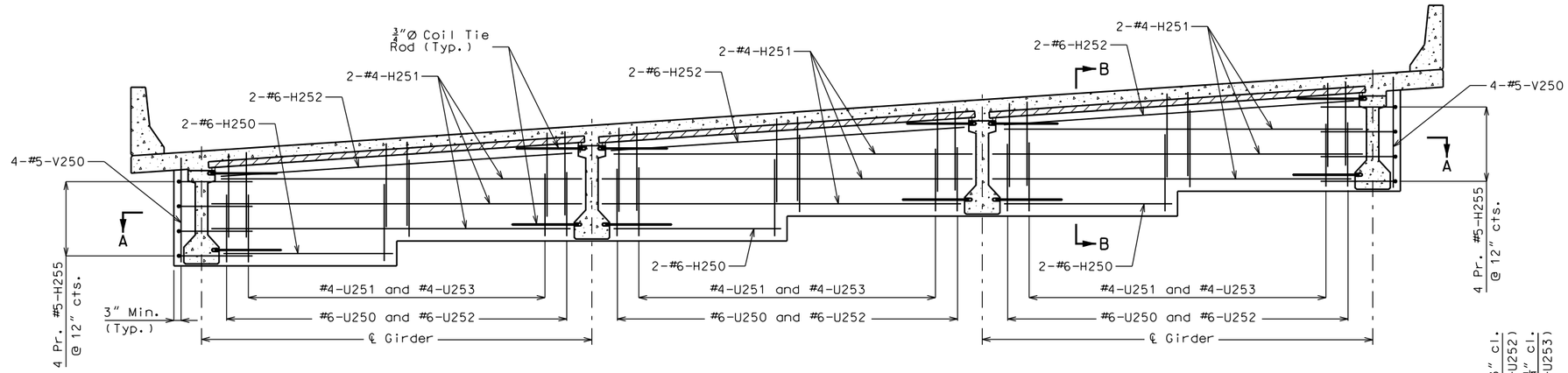

PART SECTION THRU INTERMEDIATE BENT NO. 2

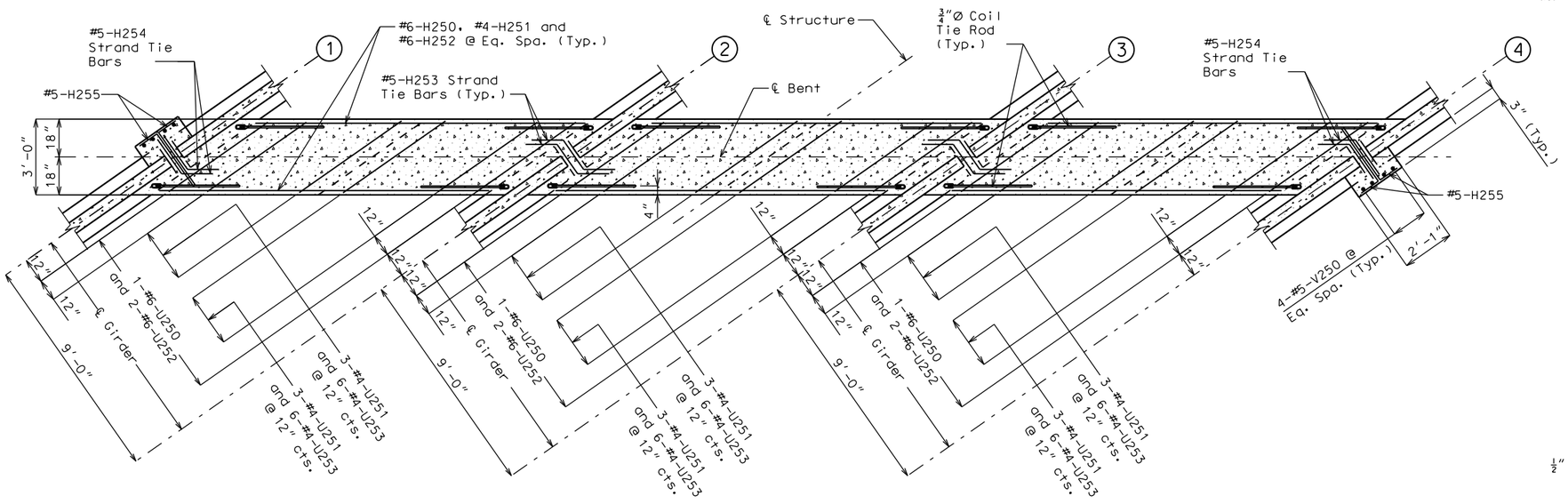

SECTION A-A

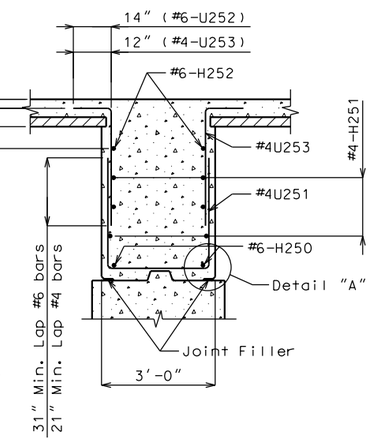

SECTION B-B

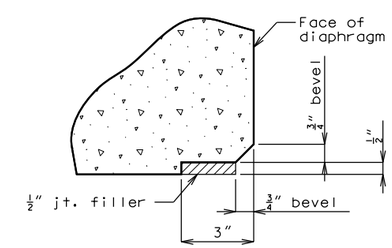

DETAIL "A"

Notes:

Diaphragms at Intermediate Bents shall be built vertical.

For location of #5-H253 and #5-H254 (Strand Tie Bars), see Sheet Nos. 19 and 20.

For location of Coil Ties, see Sheet No. 19 and 20.

Place U-bars parallel to ℄ Structure.

For steps 2" or more, use 1/2" Joint Filler up vertical face.

DETAILS OF DIAPHRAGM AT INTERMEDIATE BENT NO. 2

Detailed Jan 2016
Checked Jan 2016

Note: This drawing is not to scale. Follow dimensions.

STATE OF MISSOURI STEPHEN M. SEELY NUMBER E-24698 REGISTERED PROFESSIONAL ENGINEER

DATE PREPARED	1/20/2016
STATE	MO
SHEET NO.	36
ROUTE	STROUP
COUNTY	JEFFERSON
JOB NO.	13-0079
PROJECT NO.	STP-5403 (656)
BRIDGE NO.	24700121

DATE	DESCRIPTION

IF A SEAL IS PRESENT ON THIS SHEET IT HAS BEEN ELECTRONICALLY SEALED AND DATED.

JEFFERSON COUNTY PUBLIC WORKS DEPARTMENT
P.O. BOX 100
HILLSBORO, MO 63050
(636-797-5340) PHONE
(636-797-5565) FAX

ABNA
4140 LINDELL BOULEVARD
ST. LOUIS, MO 63108
PH. 314-454-0222
CERTIFICATE/LICENSE NO. 001501

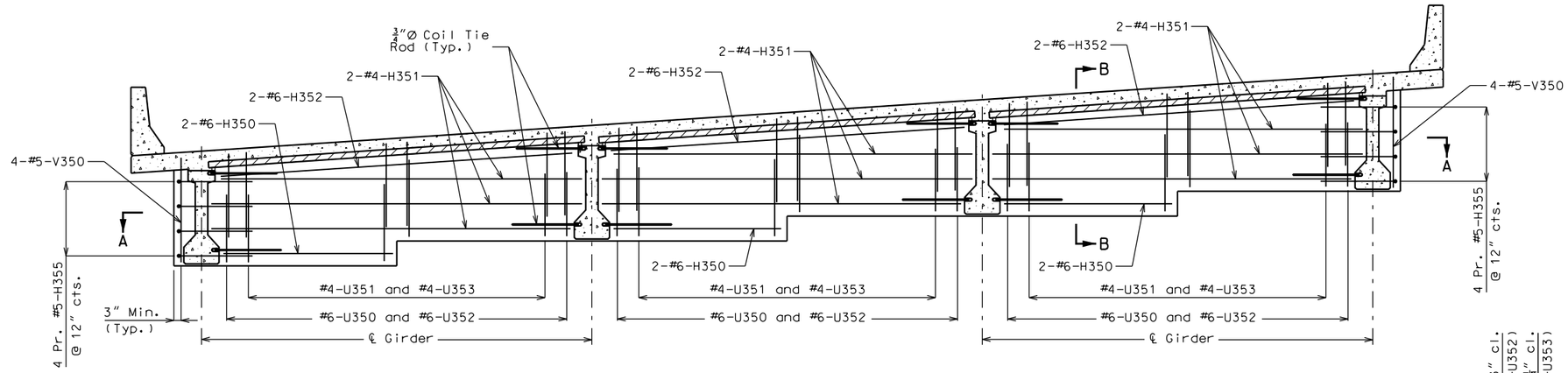

PART SECTION THRU INTERMEDIATE BENT NO. 3

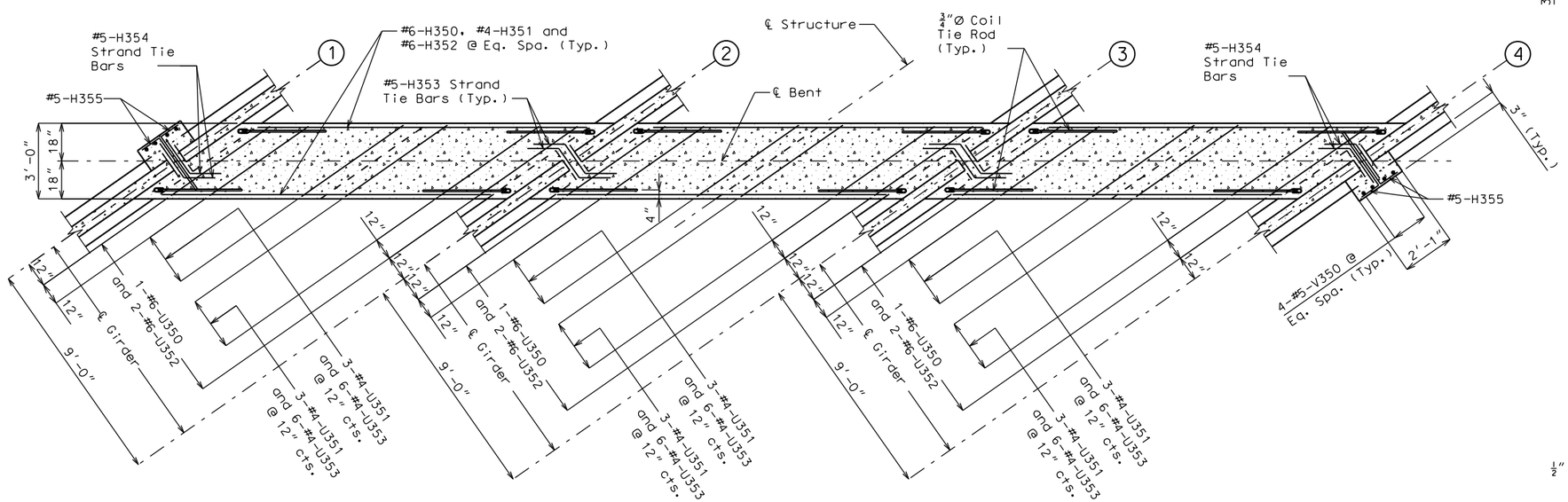

SECTION A-A

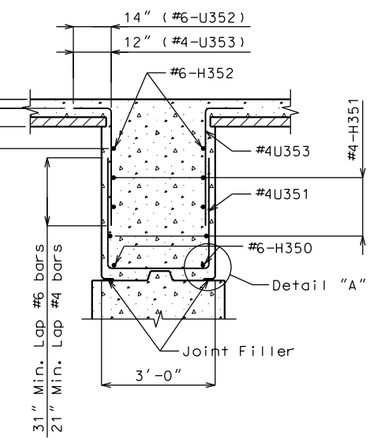

SECTION B-B

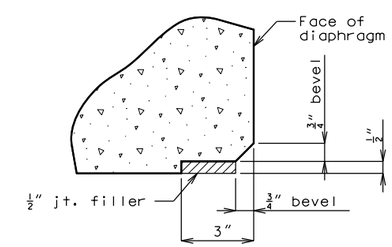

DETAIL "A"

Notes:

Diaphragms at Intermediate Bents shall be built vertical.

For location of #5-H353 and #5-H354 (Strand Tie Bars), see Sheet Nos. 19 and 20.

For location of Coil Ties, see Sheet No. 19 and 20.

Place U-bars parallel to ℄ Structure.

For steps 2" or more, use 1/2" Joint Filler up vertical face.

DETAILS OF DIAPHRAGM AT INTERMEDIATE BENT NO. 3

Detailed Jan 2016
Checked Jan 2016

Note: This drawing is not to scale. Follow dimensions.

STATE OF MISSOURI
STEPHEN M. SEIBERT
NUMBER E-24698
REGISTERED PROFESSIONAL ENGINEER

DATE PREPARED	1/20/2016
STATE	MO
SHEET NO.	37
ROUTE	STROUP
COUNTY	JEFFERSON
JOB NO.	13-0079
PROJECT NO.	STP-5403 (656)
BRIDGE NO.	24700121

DATE	DESCRIPTION

IF A SEAL IS PRESENT ON THIS SHEET IT HAS BEEN ELECTRONICALLY SEALED AND DATED.

JEFFERSON COUNTY PUBLIC WORKS DEPARTMENT
P.O. BOX 100
HILLSBORO, MO 63050
(636-797-5340) PHONE
(636-797-5565) FAX

ABNA
4140 LINDELL BOULEVARD
ST. LOUIS, MO 63108
PH. 314-454-0222
CERTIFICATE/LICENSE NO. 001501

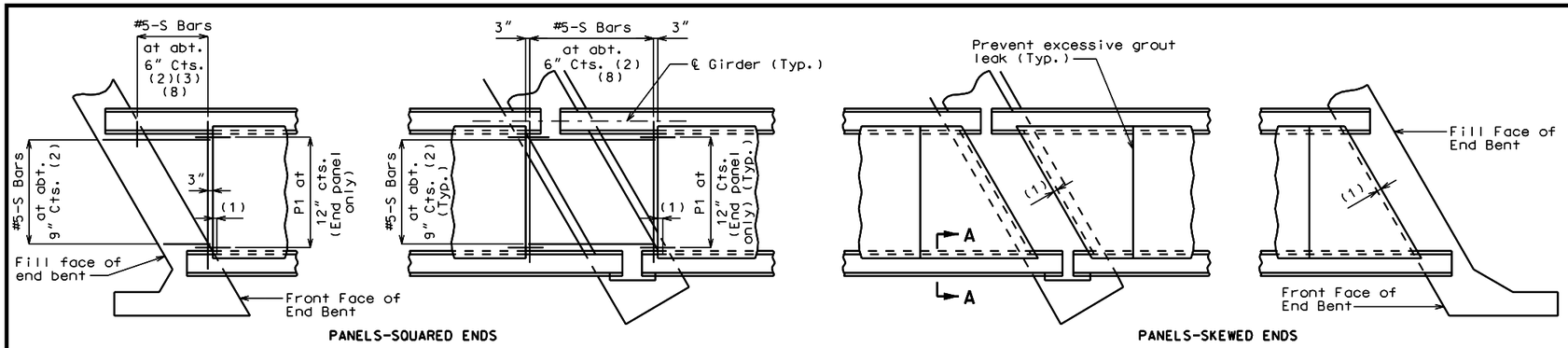

PANELS-SQUARED ENDS

PANELS-SKEWED ENDS

PLAN OF PRECAST PRESTRESSED PANELS PLACEMENT

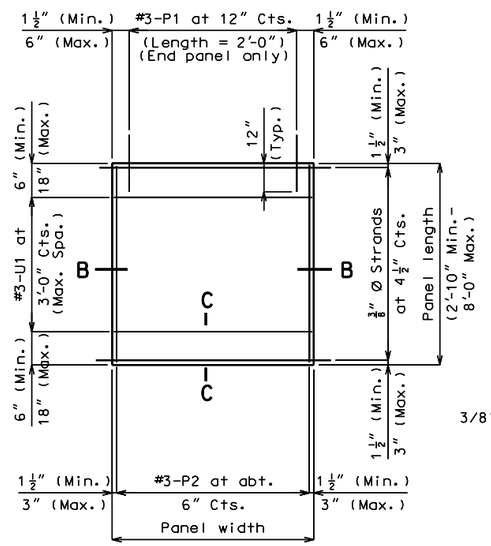

PLAN OF PRECAST PRESTRESSED PANEL

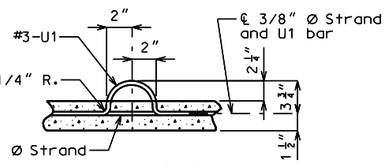

DETAIL "A"

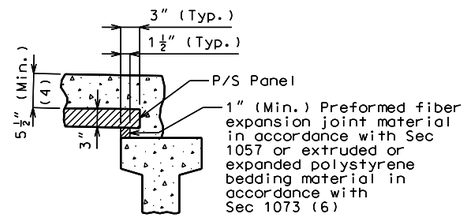

SECTION A-A

Note: Use slab haunching diagram on Sheet No. 25 for determining thickness of preformed fiber expansion joint material or polystyrene bedding material within the limits noted in general notes.

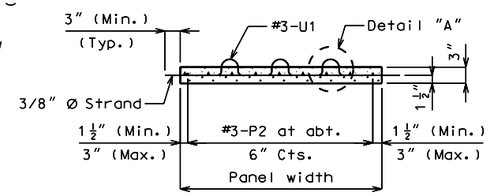

SECTION B-B

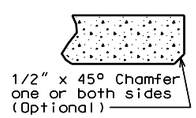

SECTION C-C

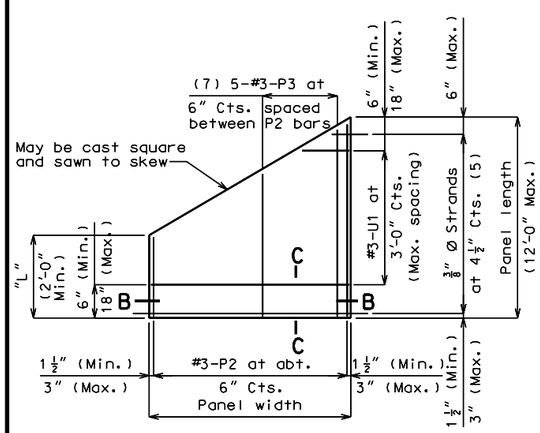

PLAN OF PRECAST PRESTRESSED PANEL
(SKEWED END-OPTIONAL)

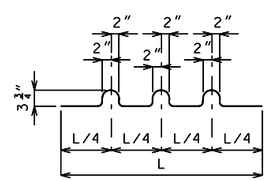

BENDING DIAGRAM FOR U1 BAR
(U1 Bars may be oriented at right angles to location and spacing shown. U1 Bars shall be placed between P1 bars).

NOTES:

Welded wire fabric or welded deformed bar mats providing a minimum area of reinforcing perpendicular to strands of 0.22 sq. in./ft., with spacing parallel to strands sufficient to insure proper handling, may be used in lieu of the #3-P2 bars shown. Wire or bar diameter shall not be larger than 0.375 inches. The above alternative reinforcement criteria may be used in lieu of the #3-P3 bars, when required, and placed over a width not less than 2 feet.

The reinforcing steel shall be tied securely to the 3/8"Ø strands with the following maximum spacing in each direction:
#3-P2 bars at 16 inches.
Welded wire fabric or welded deformed bar mats at 2'-0".

Tie the #3-U1 bars to the #3-P2 bars, to the welded wire fabric or the welded deformed bar mats at about 3'-0" centers.

All reinforcement other than prestressing strands shall be epoxy coated.

Precast panels may be in contact with stirrup reinforcing in diaphragms.

Cost of S-bars will be considered completely covered by the contract unit price for the slab.

S-bars are not listed in the bill of reinforcing.

(1) End panels shall be dimensioned 1" min. to 1 1/2" max. from the inside face of diaphragm.

(2) S-bars shown are bottom steel in slab between panels and used with squared end panels only.

(3) Extend S-Bars 18 inches beyond the front face of end bents only.

(4) In order to maintain minimum slab thickness, it may be necessary to raise the grade uniformly throughout the structure. No payment will be made for additional labor or materials required for necessary grade adjustment.

(5) Any strand 2'-0" or shorter shall have a #4 reinforcing bar on each side of it, centered between strands. Strands 2'-0" or shorter may then be debonded at the fabricator's option.

(6) All panel support pads shall be glued to the girder. When support thickness exceeds 1 1/2 inches, the pads shall be glued top and bottom. The glue used shall be the type recommended by the panel support pads manufacturer.

(7) Use #3-P3 bars if panel is skewed 45° or greater.

(8) Minimum reinforcement steel length shall be 2'-0".

GENERAL NOTES:

PRESTRESSED PANELS:
Concrete for prestressed panels shall be Class A-1 with f'c = 6,000 psi, f'ci = 4,000 psi.

The top surface of all panels shall receive a scored finish with a depth of scoring of 1/8" perpendicular to the prestressing strands in the panels.

Prestressing tendons shall be high-tensile strength uncoated seven-wire, low-relaxation strands for prestressed concrete in accordance with AASHTO M 203 Grade 270, with nominal diameter of strand = 3/8" and nominal area = 0.085 sq. in.and minimum ultimate strength = 22.95 kips (270 ksi). Larger strands may be used with the same spacing and initial tension.

Initial prestressing force = 17.2 kips/strand.

The method and sequence of releasing the strands shall be shown on the shop drawings.

Suitable anchorage devices for lifting panels may be cast in panels, provided the devices are shown on the shop drawings and approved by the engineer. Panel lengths shall be determined by the contractor and shown on the shop drawings.

When square end panels are used at skewed bents, the skewed portion shall be cast full depth. No separate payment will be made for additional concrete and reinforcing required.

Support from diaphragm forms is required under the optional skewed end until cast-in-place concrete has reached 3,000 psi compressive strength.

Minimum preformed fiber expansion joint material or polystyrene bedding material thickness shall be 1 inch. Thicker material may be used on one or both sides of the girder to reduce cast-in-place concrete thickness, to within tolerances. No more than 2 inches total thickness shall be used.

The same thickness of preformed fiber expansion joint material shall be used under any one edge of any panel except at locations where top flange thickness may be stepped. The maximum change in thickness between adjacent panels shall be 1/4 inch. The polystyrene bedding material may be cut with a transition to match haunch height above top of flange.

Slab thickness over prestressed panels varies due to girder camber.

At the contractor's option, the variation in slab thickness over prestressed panels may be eliminated or reduced by increasing and varying the girder top flange thickness. Dimensions shall be shown on the shop drawings.

REINFORCING STEEL:
All dimensions are out to out.

Minimum clearance to reinforcing steel shall be 1 1/2", unless otherwise shown.

Hooks and bends shall be in accordance with the CRSI Manual of Standard Practice for Detailing Reinforced Concrete Structures, Stirrup and Tie Dimensions.

Actual lengths are measured along centerline of bar to the nearest inch.

The prestressed panel quantities are not included in the table of estimated quantities for slab.

If U1 bars interfere with placement of slab steel, U1 loops may be bent over, as necessary, to clear slab steel.

DETAILS OF PRECAST PRESTRESSED PANELS

Detailed Jan 2016
Checked Jan 2016

Note: This drawing is not to scale. Follow dimensions.

Sheet No. 24 of 38

STATE OF MISSOURI
STEPHEN M. SEELY
NUMBER E-24698
REGISTERED PROFESSIONAL ENGINEER

IF A SEAL IS PRESENT ON THIS SHEET IT HAS BEEN ELECTRONICALLY SEALED AND DATED.

DATE PREPARED	
1/20/2016	
STATE	SHEET NO.
MO	38
ROUTE	
STROUP	
COUNTY	
JEFFERSON	
JOB NO.	
13-0079	
PROJECT NO.	
STP-5403 (656)	
BRIDGE NO.	
24700121	

DATE	DESCRIPTION

JEFFERSON COUNTY PUBLIC WORKS
DEPARTMENT
P.O. BOX 100
HILLSBORO, MO 63050
(636-797-5340) PHONE
(636-797-5565) FAX

ABNA
4140 LINDELL BOULEVARD
ST. LOUIS, MO 63108
PH. 314-454-0222
CERTIFICATE/LICENSE NO. 001501

Theoretical Bottom of Slab Elevations at ℄ Girder (Prior to Forming for Slab)✱✱

	Span (1-2)										
	℄ Brg	0.10	0.20	0.30	0.40	0.50	0.60	0.70	0.80	0.90	℄ Brg
Girder No. 1	486.69	487.13	487.58	488.02	488.46	488.90	489.34	489.78	490.21	490.64	491.08
Girder No. 2	487.66	488.11	488.55	489.00	489.44	489.88	490.32	490.75	491.19	491.62	492.06
Girder No. 3	488.64	489.08	489.53	489.97	490.42	490.86	491.29	491.73	492.16	492.60	493.03
Girder No. 4	489.62	490.06	490.51	490.95	491.39	491.83	492.27	492.71	493.14	493.58	494.01
	Span (2-3)										
	℄ Brg	0.10	0.20	0.30	0.40	0.50	0.60	0.70	0.80	0.90	℄ Brg
Girder No. 1	491.22	491.86	492.50	493.13	493.75	494.37	494.98	495.59	496.19	496.78	497.37
Girder No. 2	492.20	492.84	493.47	494.11	494.73	495.35	495.96	496.57	497.16	497.76	498.35
Girder No. 3	493.17	493.81	494.45	495.08	495.71	496.33	496.94	497.54	498.14	498.73	499.32
Girder No. 4	494.15	494.79	495.43	496.06	496.68	497.30	497.91	498.52	499.12	499.71	500.30
	Span (3-4)										
	℄ Brg	0.10	0.20	0.30	0.40	0.50	0.60	0.70	0.80	0.90	℄ Brg
Girder No. 1	497.52	497.96	498.41	498.85	499.29	499.73	500.17	500.61	501.04	501.48	501.91
Girder No. 2	498.49	498.94	499.38	499.83	500.27	500.71	501.15	501.58	502.02	502.45	502.89
Girder No. 3	499.47	499.92	500.36	500.80	501.25	501.69	502.12	502.56	502.99	503.43	503.86
Girder No. 4	500.45	500.89	501.34	501.78	502.22	502.66	503.10	503.54	503.97	504.41	504.84

(✱✱) Elevations are based on constant slab thickness of $8\frac{1}{2}$" and include allowance for theoretical dead load deflections due to weight of slab (including prestressed panel) and rail.

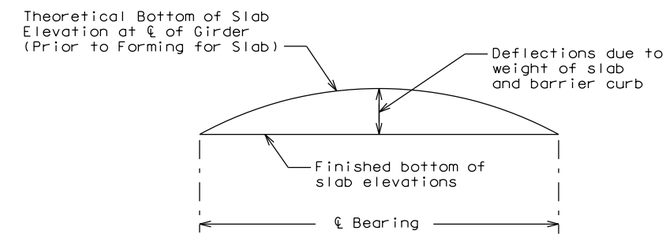

TYPICAL SLAB ELEVATIONS DIAGRAM

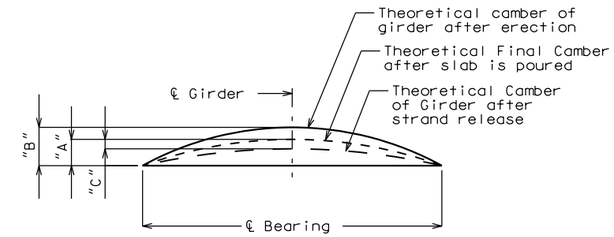

GIRDER CAMBER DIAGRAM

	Span (1-2)			Span (2-3)			Span (3-4)		
	"A"	"B"	"C"	"A"	"B"	"C"	"A"	"B"	"C"
Ext. Girder	$\frac{3}{8}$"	$\frac{5}{8}$"	$\frac{3}{8}$"	$\frac{1}{2}$"	$1\frac{1}{2}$"	$\frac{7}{8}$"	$\frac{3}{8}$"	$\frac{5}{8}$"	$\frac{3}{8}$"
Int. Girder	$\frac{3}{8}$"			$\frac{1}{2}$"			$\frac{3}{8}$"		

If girder camber is different from that shown in the camber diagram, adjustment of the slab haunches, an increase in slab thickness or a raise in grade uniformly throughout the structure shall be necessary. No payment will be made for additional labor or materials required for variation in haunching, slab thickness or grade adjustment.

Concrete in the slab haunches is included in the Estimated Quantities for Slab on Concrete I-Girders.

Conversion factors for girder camber
0.1 pt. = 0.314 x 0.5 pt.
0.2 pt. = 0.593 x 0.5 pt.
0.3 pt. = 0.813 x 0.5 pt.
0.4 pt. = 0.952 x 0.5 pt.

0.25 pt. = 0.7125 x 0.5 pt.

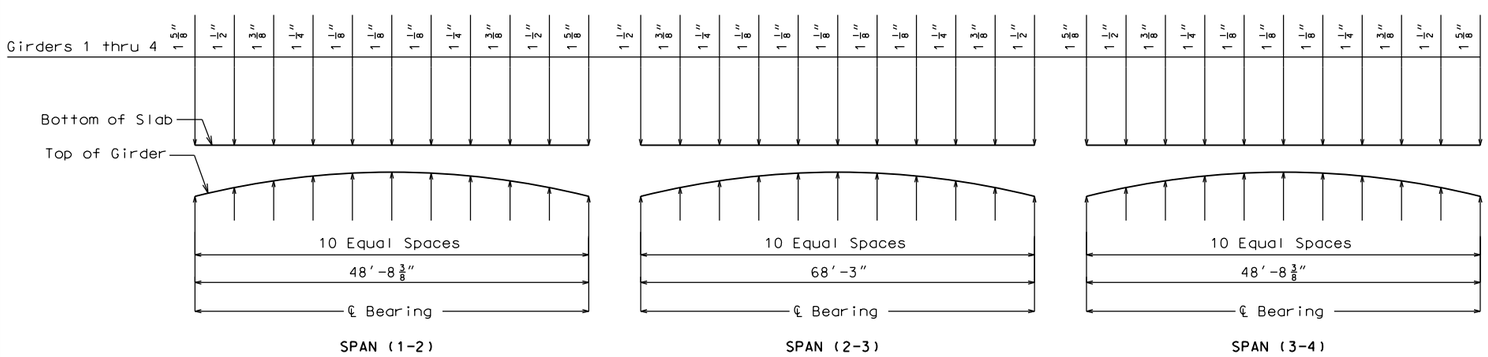

THEORETICAL SLAB HAUNCHING DIAGRAM

Concrete in the slab haunches is included in the Estimated Quantities for Slab on Concrete I-Girders.

Detailed Jan 2016
Checked Jan 2016

Note: This drawing is not to scale. Follow dimensions.

STATE OF MISSOURI
STEPHEN M. SEELY
NUMBER E-24698
REGISTERED PROFESSIONAL ENGINEER

DATE PREPARED 1/20/2016
STATE MO
SHEET NO. 39
ROUTE STROUP
COUNTY JEFFERSON
JOB NO. 13-0079
PROJECT NO. STP-5403 (656)
BRIDGE NO. 24700121

DESCRIPTION
DATE

IF A SEAL IS PRESENT ON THIS SHEET IT HAS BEEN ELECTRONICALLY SEALED AND DATED.

JEFFERSON COUNTY PUBLIC WORKS DEPARTMENT
P.O. BOX 100
HILLSBORO, MO 63050
(636-797-5340) PHONE
(636-797-5565) FAX

ABNA
4140 LINDELL BOULEVARD
ST. LOUIS, MO 63108
PH. 314-454-0222
CERTIFICATE/LICENSE NO. 001501

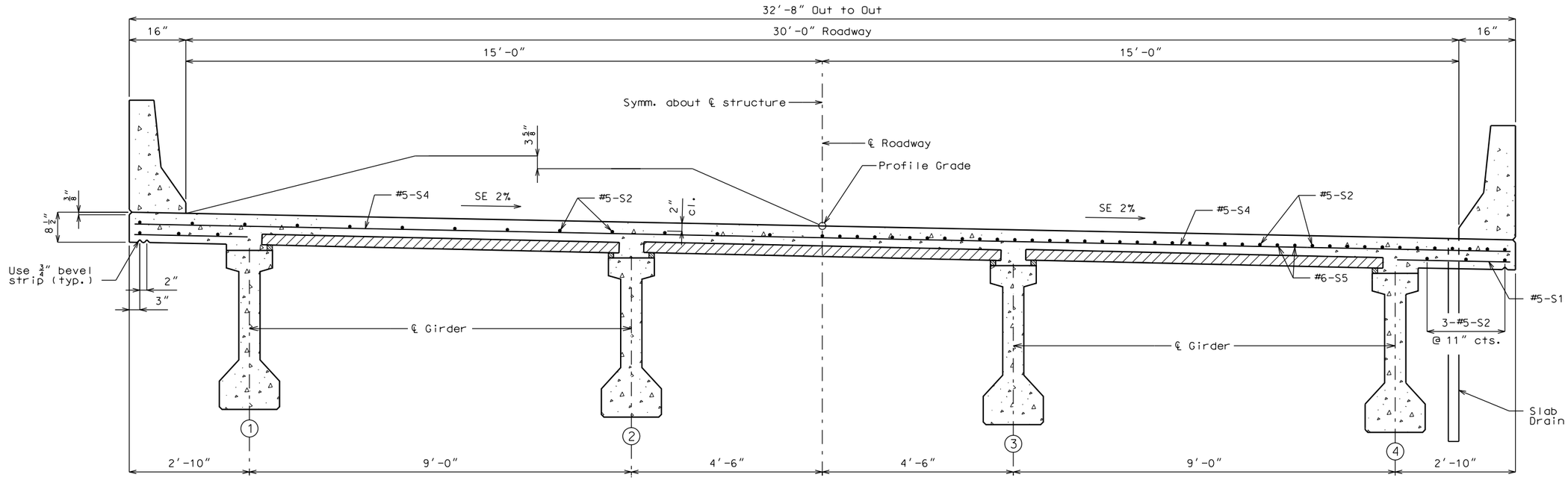

HALF SECTION NEAR ℄ SPAN

HALF SECTION NEAR INTERMEDIATE BENT

30'-0" ROADWAY - 4 GIRDER (SYMM.)

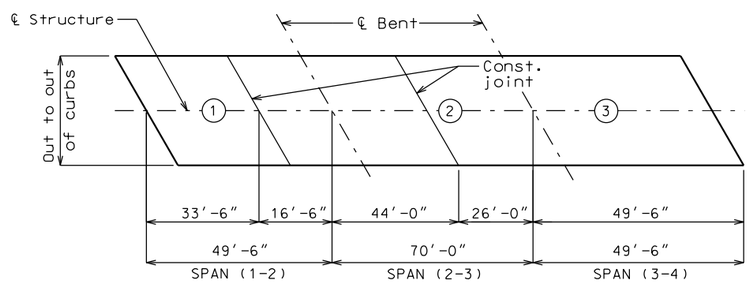

	Sequence of Pours			Min. rate of pour cu. yds./hr.
	Direction			With retarder
Basic sequence	1	2	3	25
	End to 2	1 to 3	2 to end	
Alternate pours to the basic sequence are subject to the approval of the engineer in accordance with Sec 703.				
Alternate "A" pours	1 + 2		3	25
	End to 3		2 to end	
Alternate "B" pours	1 + 2 + 3			35
	End to end			

Note: The contractor shall furnish an approved retarder to retard the set of the concrete to 2.5 hours, and shall pour and satisfactorily finish the slab pours at the rate given.

The concrete diaphragm at the intermediate bents and integral end bents shall be poured a minimum of 30 minutes and a maximum of 2 hours before the slab is poured.

SLAB POURING SEQUENCE

Detailed Jan 2016
Checked Jan 2016

Note: This drawing is not to scale. Follow dimensions.

STATE OF MISSOURI
STEPHEN M. SEELBACH
NUMBER E-24698
REGISTERED PROFESSIONAL ENGINEER

DATE PREPARED	1/20/2016
STATE	MO
SHEET NO.	40
ROUTE	STROUP
COUNTY	JEFFERSON
JOB NO.	13-0079
PROJECT NO.	STP-5403 (656)
BRIDGE NO.	24700121

DESCRIPTION

DATE

IF A SEAL IS PRESENT ON THIS SHEET IT HAS BEEN ELECTRONICALLY SEALED AND DATED.

JEFFERSON COUNTY PUBLIC WORKS DEPARTMENT
P.O. BOX 100
HILLSBORO, MO 63050
(636-797-5340) PHONE
(636-797-5565) FAX

ABNA
4140 LINDELL BOULEVARD
ST. LOUIS, MO 63108
PH. 314-454-0222
CERTIFICATE/LICENSE NO. 001501

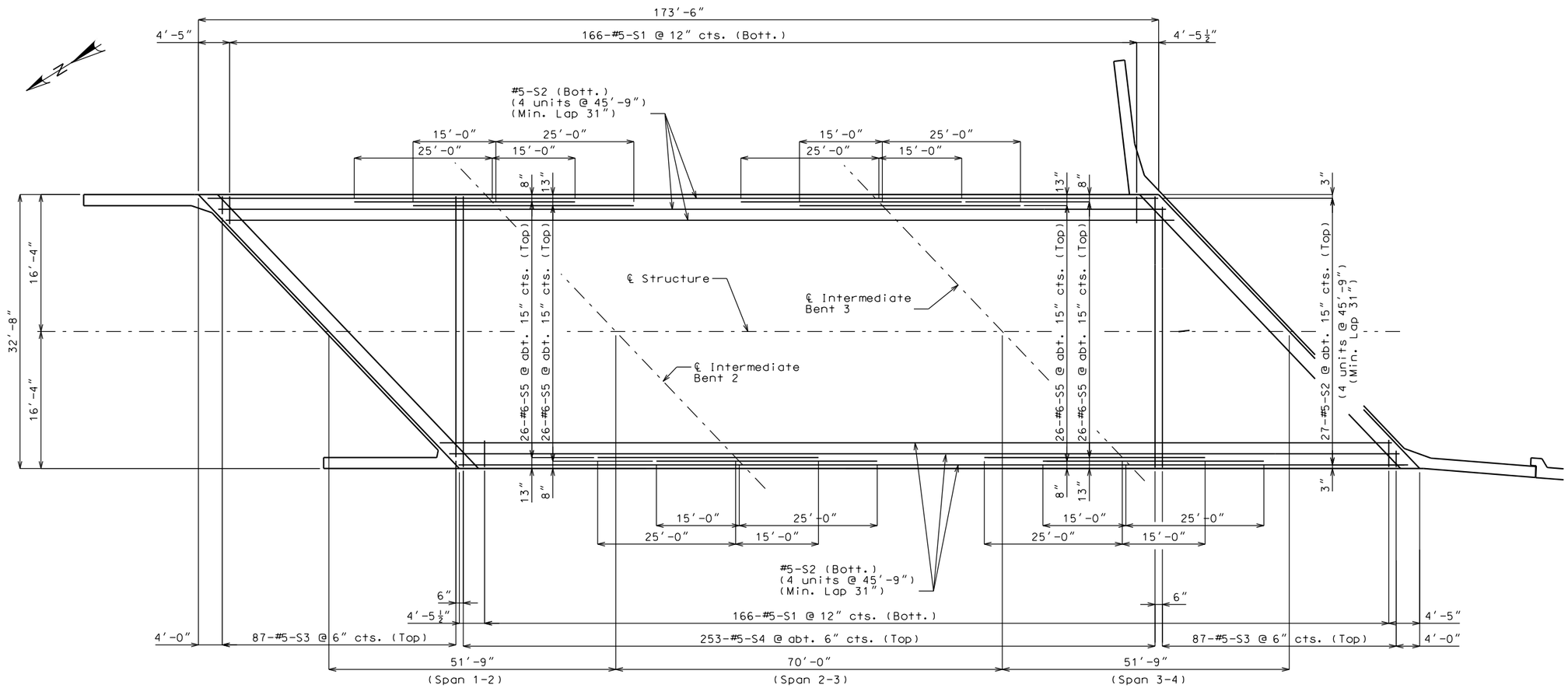

SLAB PLAN SHOWING REINFORCEMENT

Detailed Jan 2016
Checked Jan 2016

Note: This drawing is not to scale. Follow dimensions.

STATE OF MISSOURI
STEPHEN M. SEELE
NUMBER E-24698
REGISTERED PROFESSIONAL ENGINEER

DATE PREPARED	1/20/2016
STATE	MO
SHEET NO.	41
ROUTE	STROUP
COUNTY	JEFFERSON
JOB NO.	13-0079
PROJECT NO.	STP-5403 (656)
BRIDGE NO.	24700121

DESCRIPTION

DATE

IF A SEAL IS PRESENT ON THIS SHEET IT HAS BEEN ELECTRONICALLY SEALED AND DATED.

JEFFERSON COUNTY PUBLIC WORKS
DEPARTMENT
P.O. BOX 100
HILLSBORO, MO 63050
(636-797-5340) PHONE
(636-797-5565) FAX

ABNA
4140 LINDELL BOULEVARD
ST. LOUIS, MO 63108
PH. 314-454-0222
CERTIFICATE/LICENSE NO. 001501

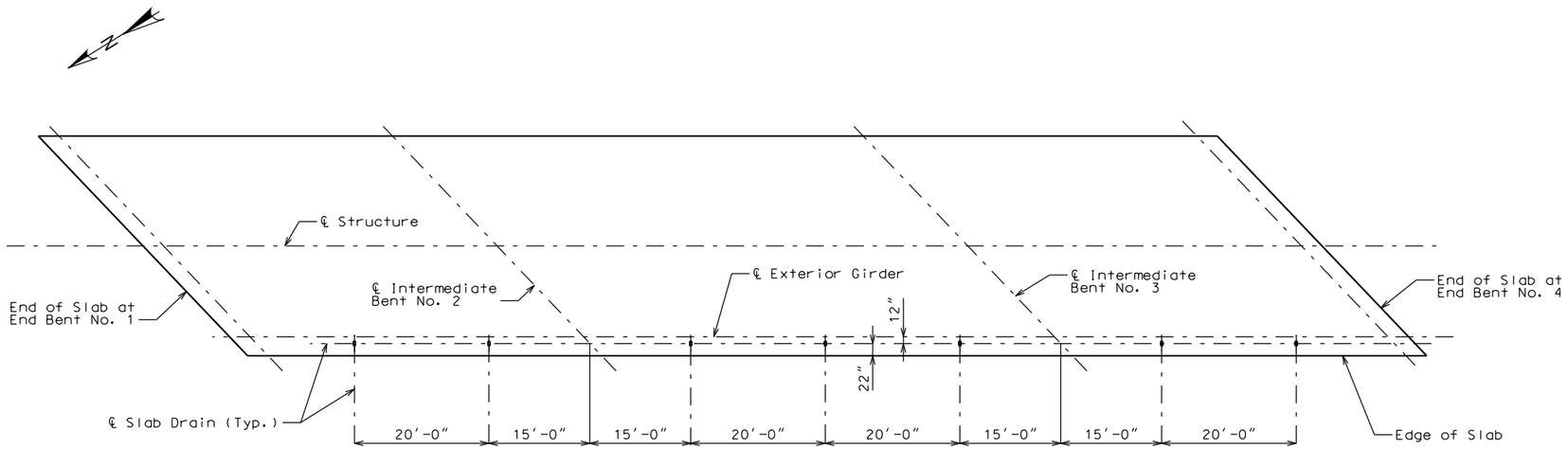

PLAN OF SLAB SHOWING SLAB DRAIN LOCATIONS

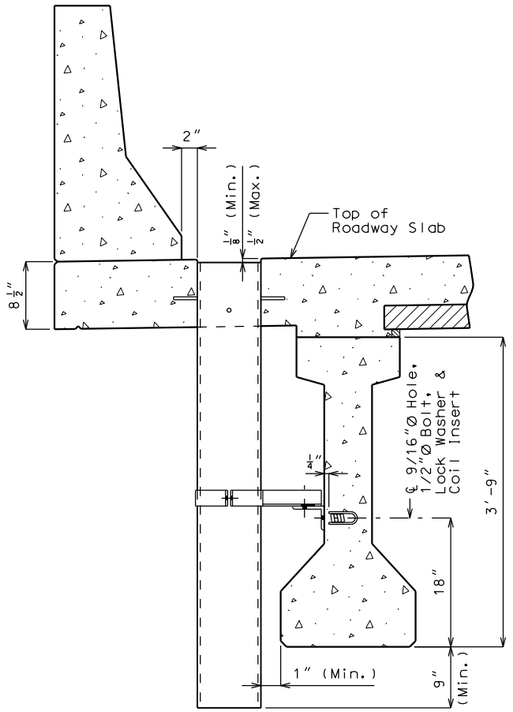

PART SECTION NEAR DRAIN

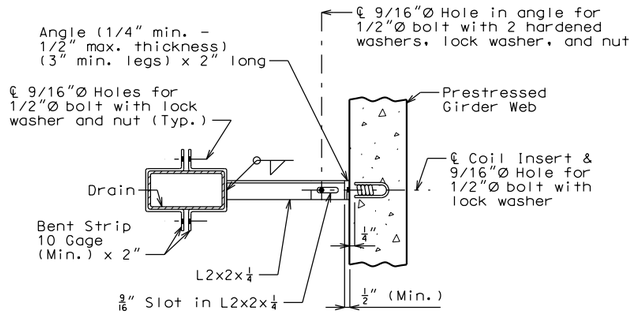

PART SECTION SHOWING BRACKET ASSEMBLY

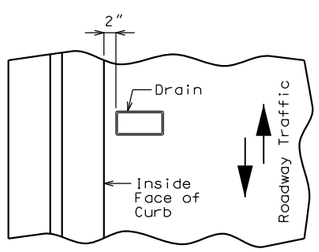

PART PLAN OF SLAB AT DRAIN

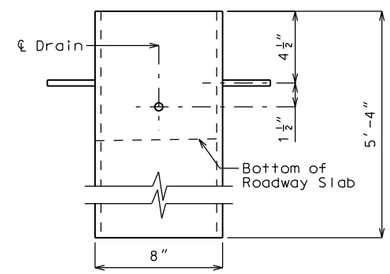

ELEVATION OF DRAIN

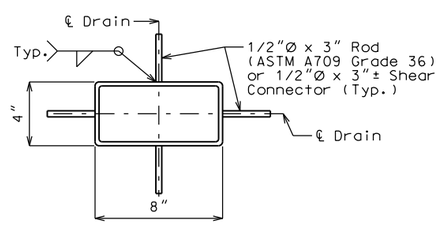

PLAN OF STEEL DRAIN

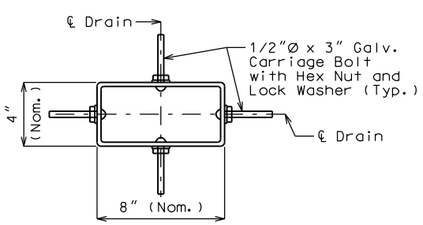

PLAN OF OPTIONAL FRP DRAIN

General Notes:

Slab drain bracket assembly shall be ASTM A709 Grade 36 steel.

Locate drains in slab by dimensions shown in Part Section Near Drain.

Reinforcing steel shall be shifted to clear drains.

The coil inserts and bracket assembly shall be galvanized in accordance with ASTM A123.

All bolts, hardened washers, lock washers and nuts shall be galvanized in accordance with ASTM A153.

Shop drawings will not be required for the slab drains and the bracket assembly.

The coil insert required for the bracket assembly attachment shall be located on the prestressed girder shop drawings.

Coil inserts shall have a concrete pull-out strength (ultimate load) of at least 2,500 pounds in 5,000 psi concrete.

The bolt required to attach the slab drain bracket assembly to the prestressed girder web shall be supplied by the prestressed girder fabricator.

Notes (Steel Drain):

Slab drains may be fabricated of either 1/4" welded sheets of ASTM A709 Grade 36 steel or from 1/4" structural steel tubing ASTM A500 or A501.

Outside dimensions of drains are 8" x 4".

The drains shall be galvanized in accordance with ASTM A123.

Notes (Optional FRP Drain)

Fiberglass Reinforced Polymer (FRP) slab drains may be substituted for steel slab drains as a contractor's option.

Drains shall be machine filament-wound thermosetting resin tubing meeting the requirements of ASTM D2996 with the following exceptions:

Shape of drains shall be rectangular with outside nominal dimensions of 8" x 4".

Minimum reinforced wall thickness shall be 1/4 inch.

The resin used shall be ultraviolet (UV) resistant and/or have UV inhibitors mixed throughout. Drains may have an exterior coating for additional UV resistance.

The color of the slab drain shall be Gray (Federal Standard #26373). The color shall be uniform throughout the resin and any coating used.

The combination of materials used in the manufacture of the drains shall be tested for UV resistance in accordance with ASTM D4329 Cycle A. The representative material shall withstand at least 500 hours of testing with only minor discoloration and without any physical deterioration. The contractor shall furnish the results of the required ultraviolet testing prior to acceptance of the slab drains.

At the contractor's option, drains may be field cut. The method of cutting FRP slab drain shall be recommended by the manufacturer to ensure a smooth, chip free cut.

No additional payment will be made for this substitution.

SLAB DRAIN DETAILS

Note: This drawing is not to scale. Follow dimensions.

Detailed Jan 2016
Checked Jan 2016

Sheet No. 28 of 38

STATE OF MISSOURI — STEPHEN M. SEELY — NUMBER E-24698 — REGISTERED PROFESSIONAL ENGINEER

DATE PREPARED	
1/20/2016	
STATE	SHEET NO.
MO	42
ROUTE	
STROUP	
COUNTY	
JEFFERSON	
JOB NO.	
13-0079	
PROJECT NO.	
STP-5403 (656)	
BRIDGE NO.	
24700121	

DATE	DESCRIPTION

IF A SEAL IS PRESENT ON THIS SHEET IT HAS BEEN ELECTRONICALLY SEALED AND DATED.

JEFFERSON COUNTY PUBLIC WORKS DEPARTMENT
P.O. BOX 100
HILLSBORO, MO 63050
(636-797-5340) PHONE
(636-797-5565) FAX

ABNA
4140 LINDELL BOULEVARD
ST. LOUIS, MO 63108
PH. 314-454-0222
CERTIFICATE/LICENSE NO. 001501

J:\2013\0079\Cadd\Bridge\B_24700121_028_Floor Drain.dgn 11:25:10 AM 1/20/2016

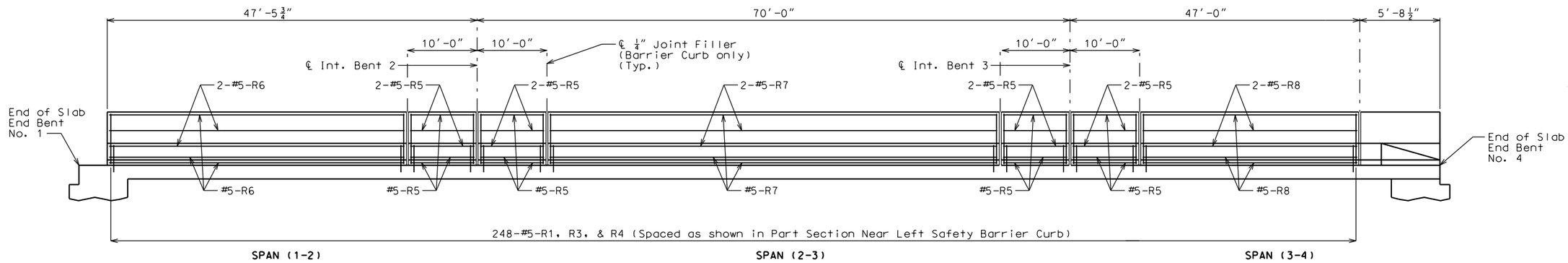

ELEVATION OF LEFT SAFETY BARRIER CURB

Longitudinal dimensions are horizontal.

Note:
For details of Left Safety Barrier Curb at End Bent 4, see Sheet No. 31.

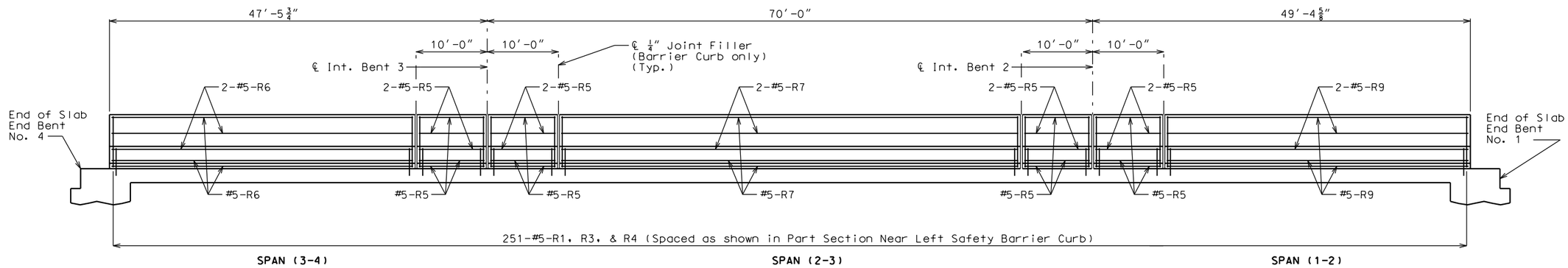

ELEVATION OF RIGHT SAFETY BARRIER CURB

Longitudinal dimensions are horizontal.

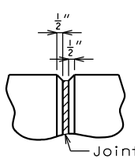

FILLED JOINT DETAIL

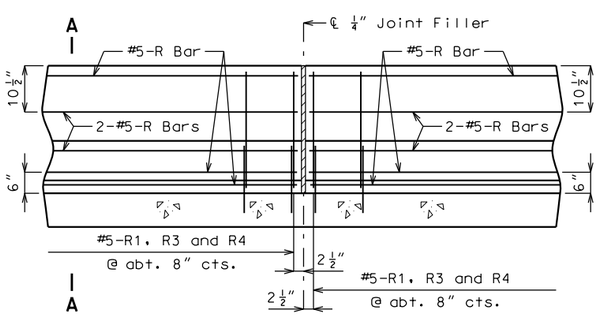

PART ELEVATION OF SAFETY BARRIER CURB
(CAST-IN-PLACE CONVENTIONAL FORMING)

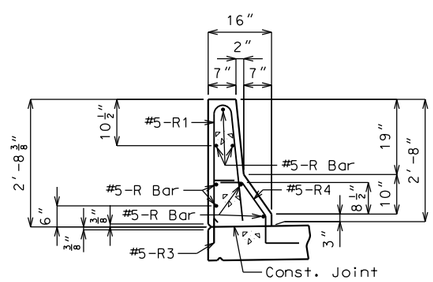

SECTION A-A

Use a minimum lap of 2'-11" for #5 horizontal safety barrier curb bars.

The cross-sectional area above the slab = 2.27 sq. ft.

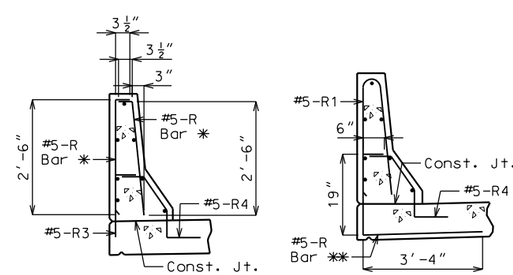

R-BAR PERMISSIBLE ALTERNATE SHAPE

✱ The R1 bar may be separated into two bars as shown, at the contractor's option, only when slip forming is not used. (All dimensions are out to out.)

✱✱ The R3 bar and #5 bottom transverse slab bar in cantilever (P/S panels only) combination may be furnished as one bar as shown, at the contractor's option.

General Notes

Top of safety barrier curb shall be built parallel to grade with barrier curb joints (except at end bents) normal to grade.

All exposed edges of safety barrier curb shall have either a 1/2-inch radius or a 3/8-inch bevel, unless otherwise noted.

Payment for all concrete and reinforcement, complete in place, will be considered completely covered by the contract unit price for Safety Barrier Curb per linear foot.

Concrete in the safety barrier curb shall be Class B-1.

Measurement of safety barrier curb is to the nearest linear foot for each structure, measured along the outside top of slab from end of wing to end of wing.

Concrete traffic barrier delineators shall be placed on top of the safety barrier curb as shown on Missouri Standard Plans 617.10 and in accordance with Sec 617. Delineators on bridges with two-lane, two-way traffic shall have retroreflective sheeting on both sides. Concrete traffic barrier delineators will be considered completely covered by the contract unit price for Safety Barrier Curb.

DETAILS OF SAFETY BARRIER CURB

Detailed Jan 2016
Checked Jan 2016

Note: This drawing is not to scale. Follow dimensions.

STATE OF MISSOURI
STEPHEN M. SEELE
NUMBER E-24698
REGISTERED PROFESSIONAL ENGINEER

DATE PREPARED	1/20/2016
STATE	MO
SHEET NO.	43
ROUTE	STROUP
COUNTY	JEFFERSON
JOB NO.	13-0079
PROJECT NO.	STP-5403 (656)
BRIDGE NO.	24700121

DATE	DESCRIPTION

JEFFERSON COUNTY PUBLIC WORKS
DEPARTMENT
P.O. BOX 100
HILLSBORO, MO 63050
(636-797-5340) PHONE
(636-797-5565) FAX

ABNA
4140 LINDELL BOULEVARD
ST. LOUIS, MO 63108
PH. 314-454-0222
CERTIFICATE/LICENSE NO. 001501

IF A SEAL IS PRESENT ON THIS SHEET IT HAS BEEN ELECTRONICALLY SEALED AND DATED.

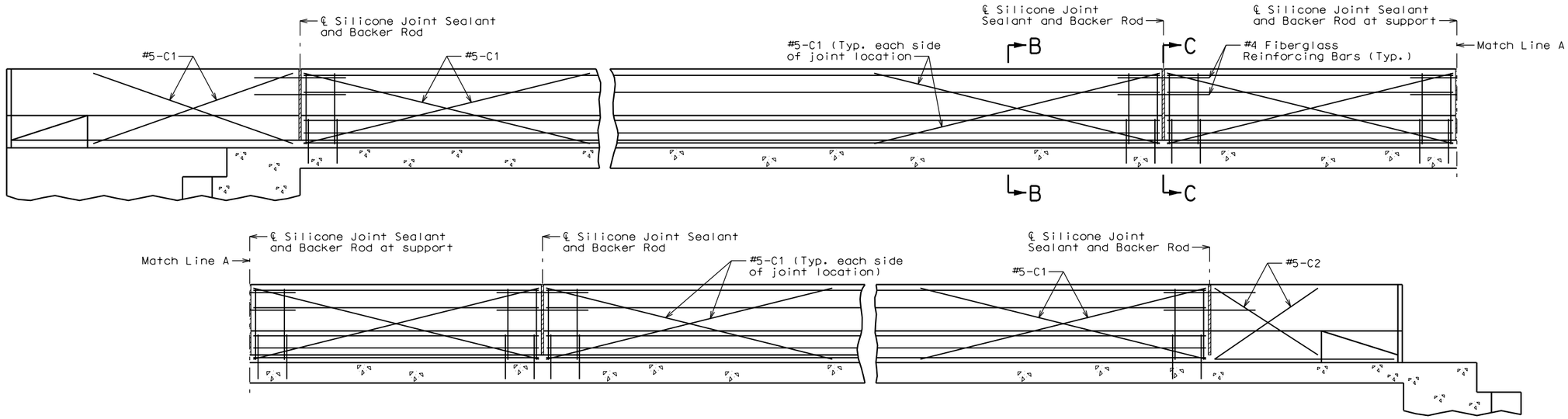

TYPICAL ELEVATION OF SAFETY BARRIER CURB AT SUPPORT LOCATIONS

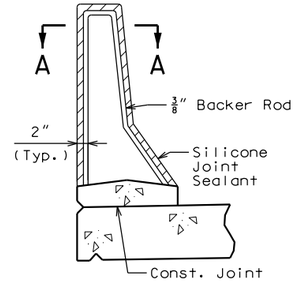

SECTION THRU JOINT

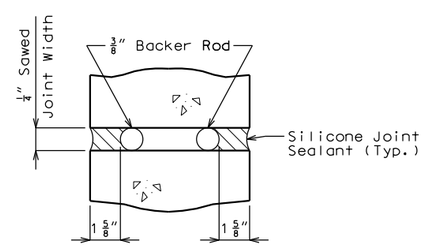

SECTION A-A

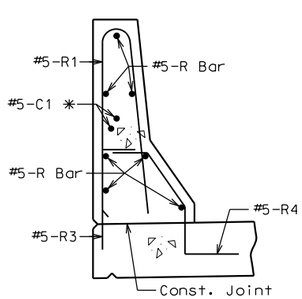

SECTION B-B

✳ Each side of joint location.

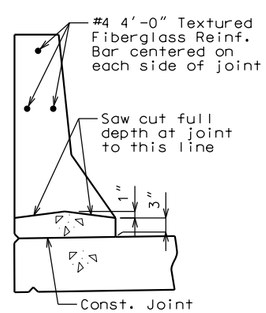

SECTION C-C

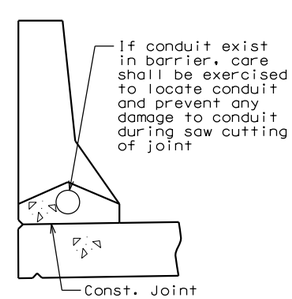

SECTION C-C

(Use when conduit required)

General Notes:

Top of safety barrier curb shall be built parallel to grade with barrier curb joints (except at end bents) normal to grade.

All exposed edges of safety barrier curb shall have either a 1/2-inch radius or a 3/8-inch bevel, unless otherwise noted.

Payment for all concrete and reinforcement, complete in place, will be considered completely covered by the contract unit price for Safety Barrier Curb per linear foot.

Concrete in the safety barrier curb shall be Class B-1.

Measurement of safety barrier curb is to the nearest linear foot for each structure, measured along the outside top of slab from end of wing to end of wing.

Concrete traffic barrier delineators shall be placed on top of the safety barrier curb as shown on Missouri Standard Plans 617.10 and in accordance with Sec 617. Delineators on bridges with two-lane, two-way traffic shall have retroreflective sheeting on both sides. Concrete traffic barrier delineators will be considered completely covered by the contract unit price for Safety Barrier Curb.

Joint sealant and backer rods shall be used on all slip-form barrier curbs instead of joint filler and shall be in accordance with Sec 717 for silicone joint sealant for saw cut and formed joints.

Plastic waterstop shall not be used with slip-form option.

For slip-form option, all sides of the safety barrier curb shall have a vertically broomed finish and the curb top shall have a transversely broomed finish.

C bars (slip-form option only) shall be used in addition to cast-in-place conventional forming reinforcement for bridge safety barrier curb.

Cost of silicone joint sealant and backer rod, complete in place, will be considered completely covered by the contract unit price for Safety Barrier Curb.

OPTIONAL SLIP-FORM SAFETY BARRIER CURB

Detailed Jan 2016
Checked Jan 2016

Note: This drawing is not to scale. Follow dimensions.

STATE OF MISSOURI
STEPHEN M. SEELBACH
NUMBER E-24698
REGISTERED PROFESSIONAL ENGINEER

DATE PREPARED	
1/20/2016	
STATE	SHEET NO.
MO	44
ROUTE	
STROUP	
COUNTY	
JEFFERSON	
JOB NO.	
13-0079	
PROJECT NO.	
STP-5403 (656)	
BRIDGE NO.	
24700121	

DESCRIPTION	DATE

IF A SEAL IS PRESENT ON THIS SHEET IT HAS BEEN ELECTRONICALLY SEALED AND DATED.

JEFFERSON COUNTY PUBLIC WORKS DEPARTMENT
P.O. BOX 100
HILLSBORO, MO 63050
(636-797-5340) PHONE
(636-797-5565) FAX

ABNA
4140 LINDELL BOULEVARD
ST. LOUIS, MO 63108
PH. 314-454-0222
CERTIFICATE/LICENSE NO. 001501

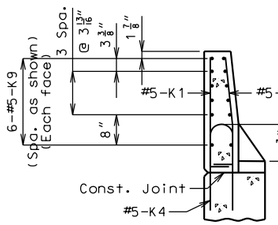

SECTION A-A

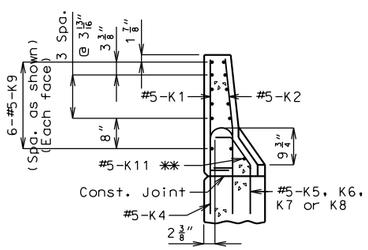

SECTION B-B

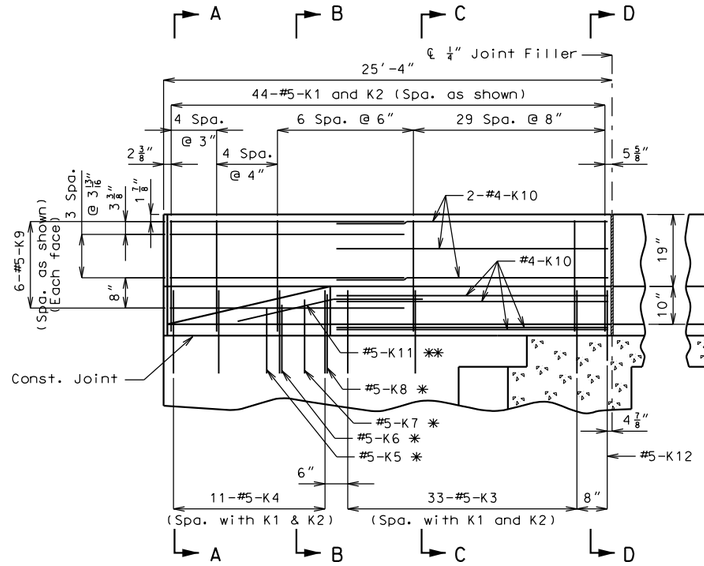

ELEVATION - END BENT 1

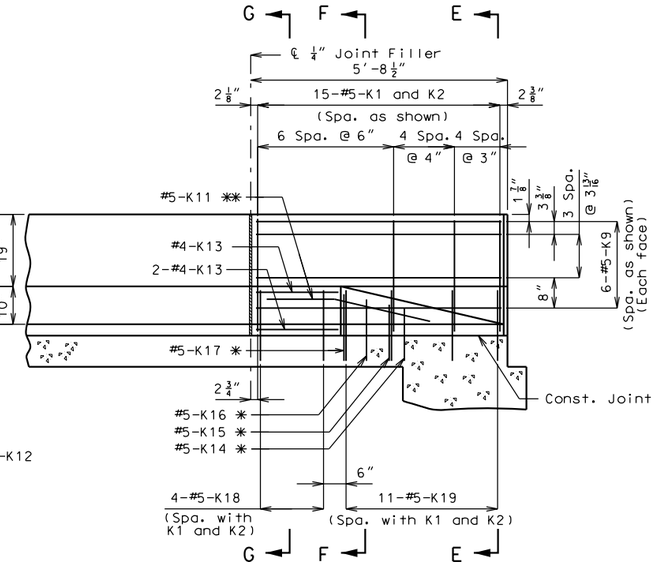

ELEVATION - END BENT 4

✱ Spaced with #5-K4 bars.

✱✱ Fit bar to follow transition face of curb.

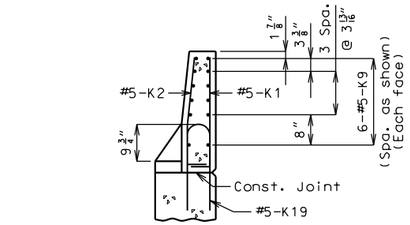

SECTION E-E

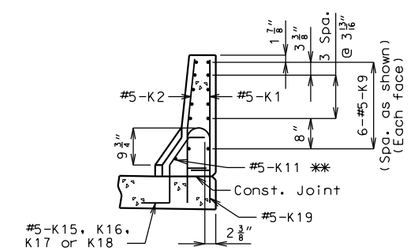

SECTION F-F

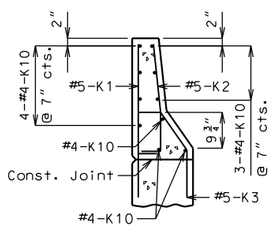

SECTION C-C

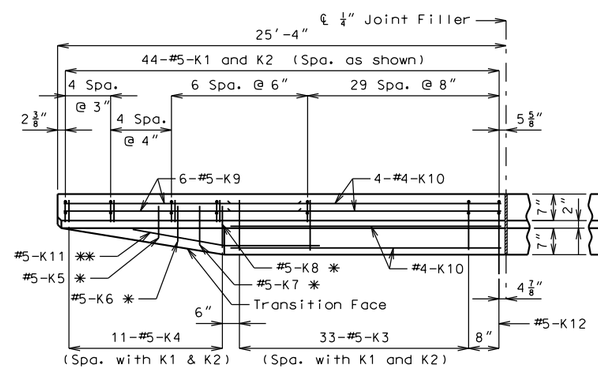

PLAN - END BENT 1

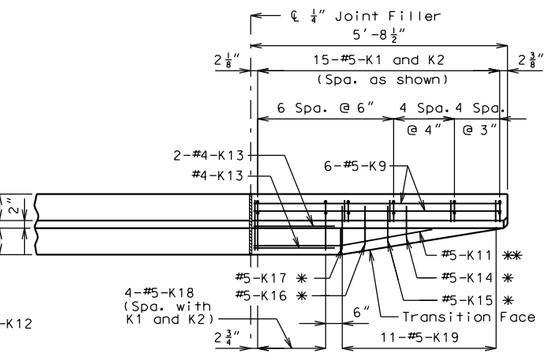

PLAN - END BENT 4

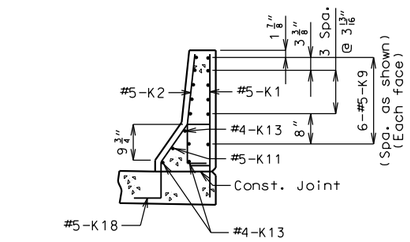

SECTION G-G

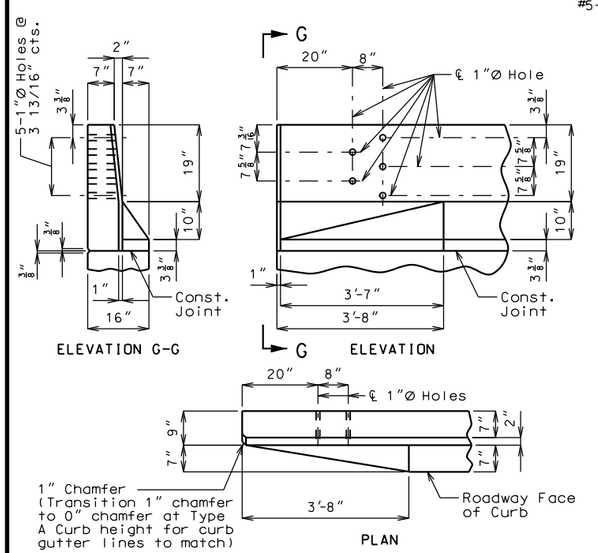

DETAILS OF GUARD RAIL ATTACHMENT

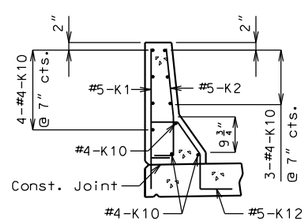

SECTION D-D

Note: Use a minimum lap of 2'-0" between K9 and K10 bars.

Concrete traffic barrier delineators shall be placed on top of the safety barrier curb as shown on Missouri Standard Plans 617.10 and in accordance with Sec 617. Delineators on bridges with two-lane, two way traffic shall have retroreflective sheeting on both sides. Concrete traffic barrier delineators will be considered completely covered by the contract unit price for Safety Barrier Curb.

DETAILS OF LEFT SAFETY BARRIER CURB AT END BENTS

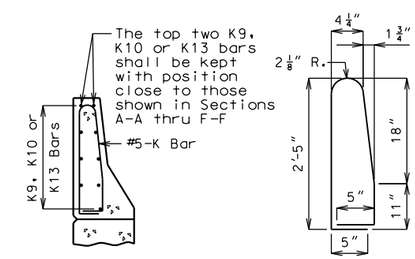

K1-K2 BAR PERMISSIBLE ALTERNATE SHAPE

(K3 or K4 thru K8 bars not shown for clarity)

The K1 and K2 bar combination may be furnished as one bar as shown, at the contractor's option.

Detailed Jan 2016
Checked Jan 2016

Note: This drawing is not to scale. Follow dimensions.

STATE OF MISSOURI STEPHEN M. SEELE NUMBER E-24688 REGISTERED PROFESSIONAL ENGINEER

DATE PREPARED	
1/20/2016	
STATE	SHEET NO.
MO	45
ROUTE	
STROUP	
COUNTY	
JEFFERSON	
JOB NO.	
13-0079	
PROJECT NO.	
STP-5403 (656)	
BRIDGE NO.	
24700121	

DATE	DESCRIPTION

IF A SEAL IS PRESENT ON THIS SHEET IT HAS BEEN ELECTRONICALLY SEALED AND DATED.

JEFFERSON COUNTY PUBLIC WORKS DEPARTMENT
P.O. BOX 100
HILLSBORO, MO 63050
(636-797-5340) PHONE
(636-797-5565) FAX

ABNA
4140 LINDELL BOULEVARD
ST. LOUIS, MO 63108
PH. 314-454-0222
CERTIFICATE/LICENSE NO. 001501

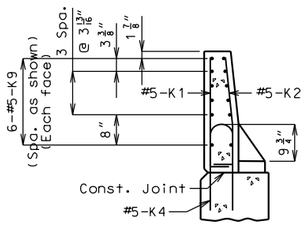

SECTION A-A

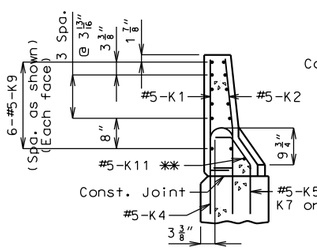

SECTION B-B

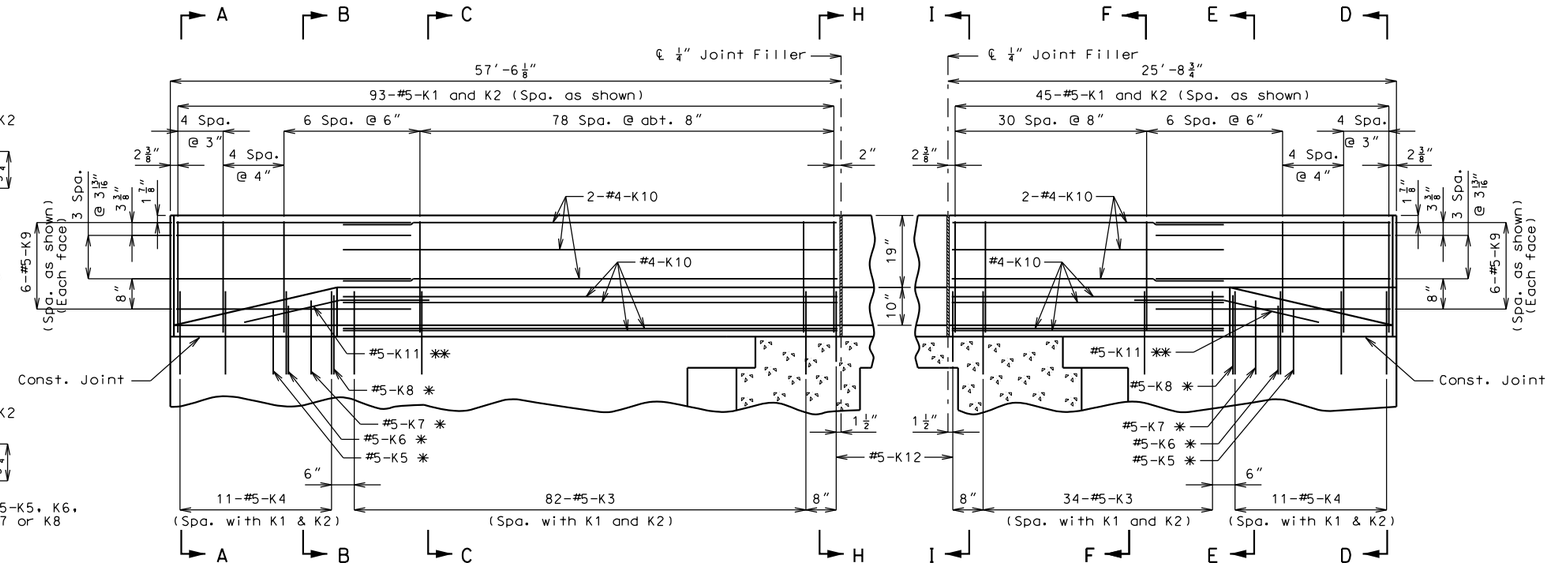

ELEVATION - END BENT 4

ELEVATION - END BENT 1

✱ Spaced with #5-K4 bars.

✱✱ Fit bar to follow transition face of curb.

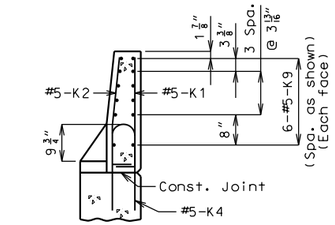

SECTION D-D

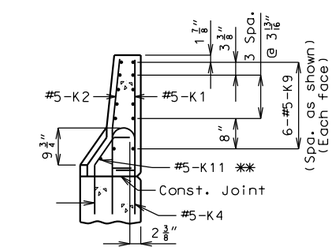

SECTION E-E

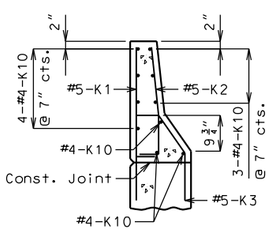

SECTION C-C

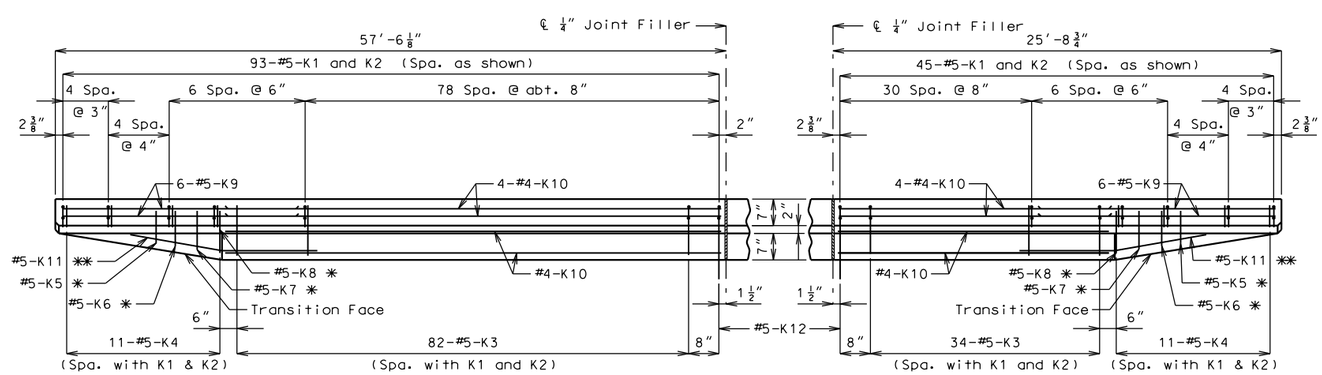

PLAN - END BENT 4

PLAN - END BENT 1

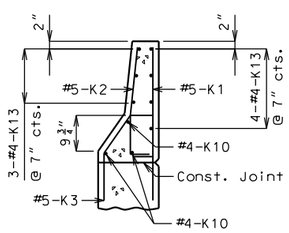

SECTION F-F

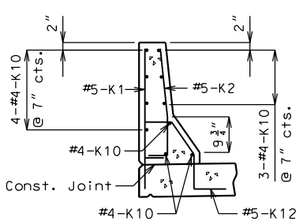

SECTION H-H

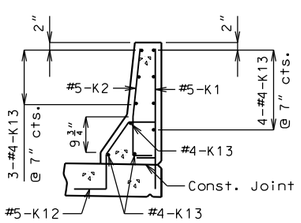

SECTION I-I

Note: Use a minimum lap of 2'-0" between K9 and K10 or K13 bars.

Concrete traffic barrier delineators shall be placed on top of the safety barrier curb as shown on Missouri Standard Plans 617.10 and in accordance with Sec 617. Delineators on bridges with two-lane, two way traffic shall have retroreflective sheeting on both sides. Concrete traffic barrier delineators will be considered completely covered by the contract unit price for Safety Barrier Curb.

For details of guard rail attachment and K1-K2 bar permissible alternate shape, see sheet 31.

DETAILS OF RIGHT SAFETY BARRIER CURB AT END BENTS

Detailed Jan 2016
Checked Jan 2016

Note: This drawing is not to scale. Follow dimensions.

STATE OF MISSOURI
STEPHEN M. SEELY
NUMBER E-24698
REGISTERED PROFESSIONAL ENGINEER

DATE PREPARED	
1/20/2016	
STATE	SHEET NO.
MO	46
ROUTE	
STROUP	
COUNTY	
JEFFERSON	
JOB NO.	
13-0079	
PROJECT NO.	
STP-5403 (656)	
BRIDGE NO.	
24700121	

DATE	DESCRIPTION

IF A SEAL IS PRESENT ON THIS SHEET IT HAS BEEN ELECTRONICALLY SEALED AND DATED.

JEFFERSON COUNTY PUBLIC WORKS
DEPARTMENT
P.O. BOX 100
HILLSBORO, MO 63050
(636-797-5340) PHONE
(636-797-5565) FAX

ABNA
4140 LINDELL BOULEVARD
ST. LOUIS, MO 63108
PH. 314-454-0222
CERTIFICATE/LICENSE NO. 001501

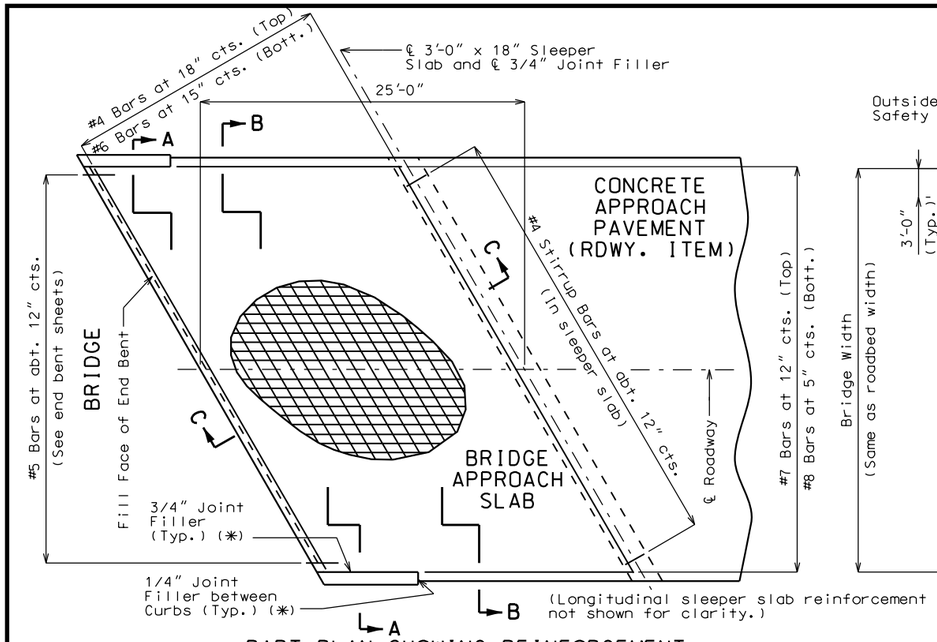

PART PLAN SHOWING REINFORCEMENT

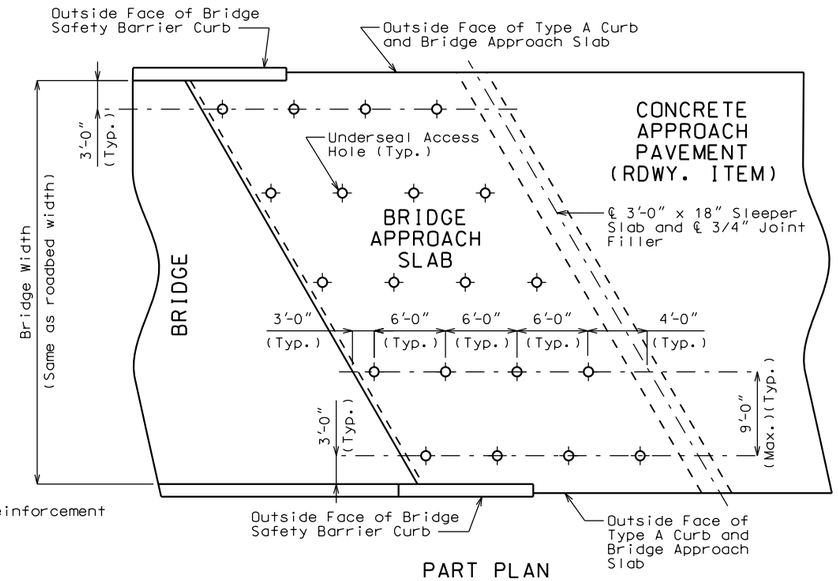

PART PLAN
(SHOWING TYPICAL UNDERSEAL ACCESS HOLE LOCATIONS)

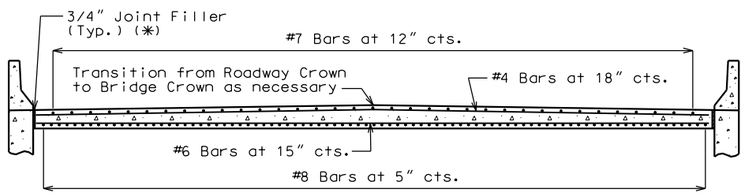

SECTION A-A

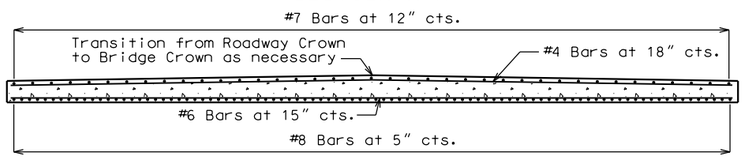

SECTION B-B

Note: With the approval of the engineer, the contractor may crown the bottom of the approach slab to match the crown of the roadway surface.

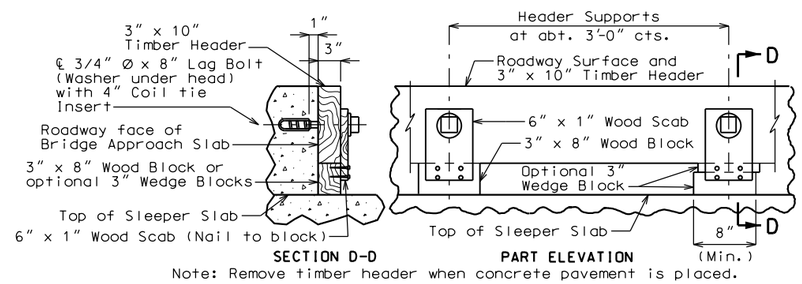

SECTION D-D PART ELEVATION

Note: Remove timber header when concrete pavement is placed.

DETAILS OF TIMBER HEADER

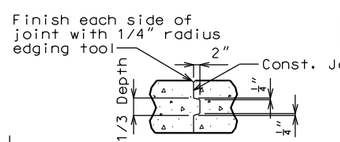

CONST. JOINT DETAIL
(IF REQUIRED)

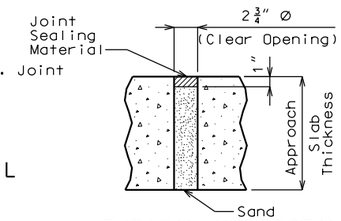

TYPICAL UNDERSEAL ACCESS HOLE DETAIL

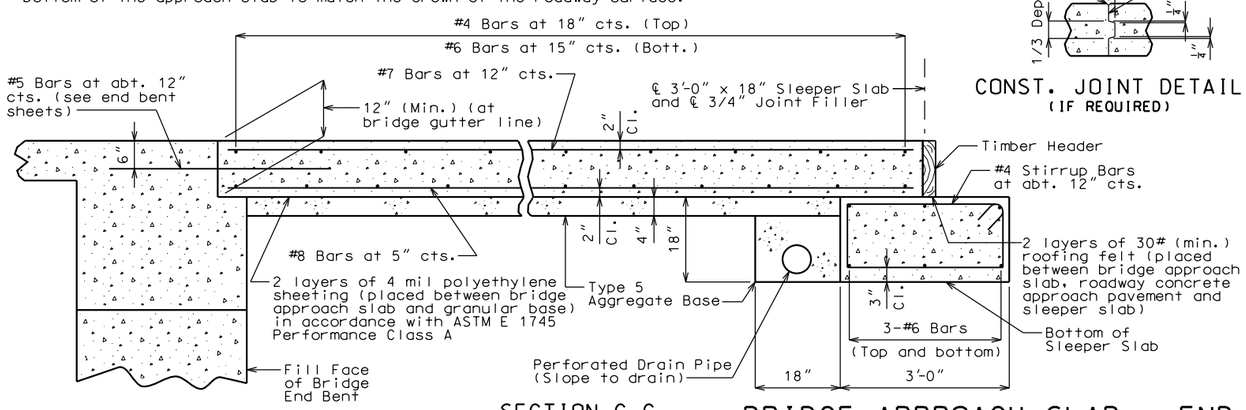

SECTION C-C

BRIDGE APPROACH SLAB - END BENT 1

Note: This drawing is not to scale. Follow dimensions.

GENERAL NOTES:

All concrete for the bridge approach slab and sleeper slab shall be in accordance with Sec 503 (f'c = 4,000 psi).

All joint filler shall be in accordance with Sec 1057 for preformed fiber expansion joint filler, except as noted.

The reinforcing steel in the bridge approach slab and the sleeper slab shall be epoxy coated Grade 60 with Fy = 60,000 psi.

Minimum clearance to reinforcing steel shall be 1 1/2", unless otherwise shown.

The reinforcing steel in the bridge approach slab and the sleeper slab shall be continuous. The transverse reinforcing steel may be made continuous by lap splicing the #4 & #6 bars 18" and 2'-2", respectively.

Mechanical bar splices shall be in accordance with Sec 706.

(✱) Seal joint between vertical face of approach slab and wing with "Silicone Joint Sealant for Saw Cut and Formed Joints" in accordance with Sec 717.

Hooks and bends shall be in accordance with the CRSI Manual of Standard Practice for Detailing Reinforced Concrete Structures, Stirrup and Tie Dimensions.

The contractor shall pour and satisfactorily finish the bridge or semi-deep slab before pouring the bridge approach slabs.

Longitudinal construction joints in approach slab and sleeper slab shall be aligned with longitudinal construction joints in bridge or semi-deep slab.

Payment for furnishing all materials, labor and excavation necessary to construct the approach slab, including the timber header, sleeper slab, underdrain, Type 5 aggregate base, joint filler and all other appurtenances and incidental work as shown on this sheet, complete in place, will be considered completely covered by the contract unit price for Bridge Approach Slab (Bridge) per square yard.

For Concrete Approach Pavement details, see roadway plans.

See Missouri Standard Plans Drawing 609.00 for details of Type A Curb.

At the contractor's option, Grade 40 reinforcement may be substituted for the Grade 60 #5 dowel bars connecting the bridge approach slab to the bridge abutment. No additional payment will be made for this substitution.

When Grade 40 reinforcement is substituted for the Grade 60 #5 dowel bars connecting the bridge approach slab to the bridge abutment, the reinforcement may be bent up to 90 degrees with a 2" minimum radius near the abutment to allow compaction of the backfill material near the abutment. Damage to epoxy coating shall be repaired in accordance with Sec 710.

Drain pipe may be either 6" diameter corrugated metallic-coated pipe underdrain, 4" diameter corrugated polyvinyl chloride (PVC) drain pipe, or 4" diameter corrugated polyethylene (PE) drain pipe.

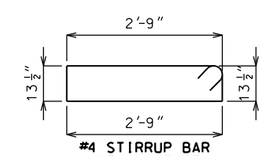

#4 STIRRUP BAR
(ACTUAL LENGTH = 8'-3")

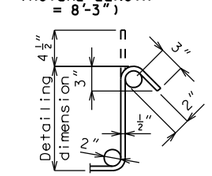

TYPICAL 135° STIRRUP HOOK DIMENSIONS BENDING DIAGRAM

Note:
Nominal lengths are based on out to out dimensions shown in bending diagram and are listed for fabricators use (nearest inch).

STATE OF MISSOURI
STEPHEN M. SEELE
NUMBER E-24698
REGISTERED PROFESSIONAL ENGINEER

DATE PREPARED	
1/20/2016	
STATE	SHEET NO.
MO	47
ROUTE	
STROUP	
COUNTY	
JEFFERSON	
JOB NO.	
13-0079	
PROJECT NO.	
STP-5403 (656)	
BRIDGE NO.	
24700121	

DATE | DESCRIPTION

IF A SEAL IS PRESENT ON THIS SHEET IT HAS BEEN ELECTRONICALLY SEALED AND DATED.

JEFFERSON COUNTY PUBLIC WORKS DEPARTMENT
P.O. BOX 100
HILLSBORO, MO 63050
(636-797-5340) PHONE
(636-797-5565) FAX

ABNA
4140 LINDELL BOULEVARD
ST. LOUIS, MO 63108
PH. 314-454-0222
CERTIFICATE/LICENSE NO. 001501

Detailed Jan 2016
Checked Jan 2016

J:\2013\0079\Cadd\Bridge\B_24700121_033_App Slab End Bent 1.dgn 11:30:54 AM 1/20/2016

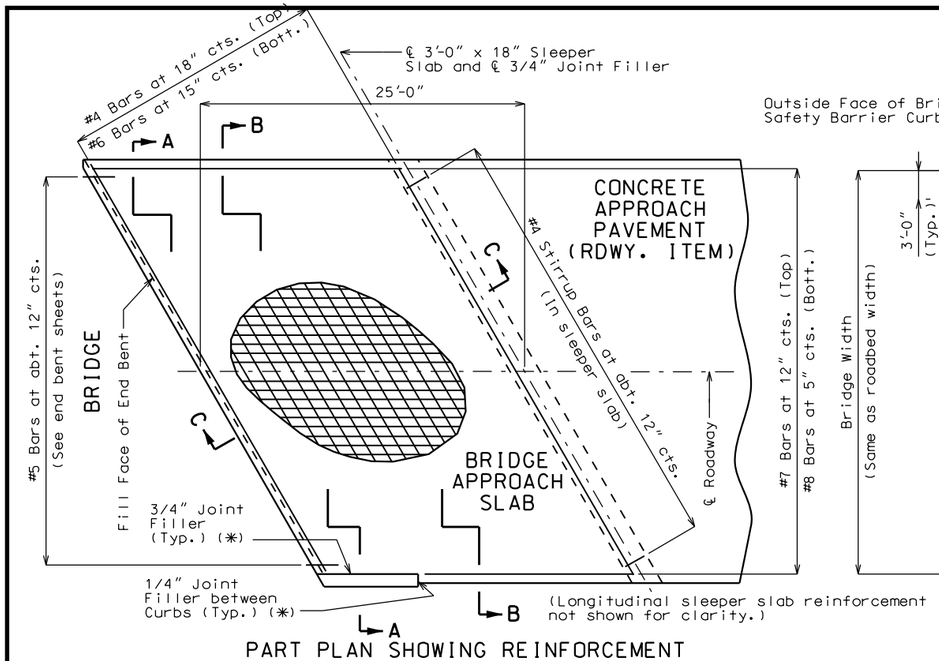

PART PLAN SHOWING REINFORCEMENT

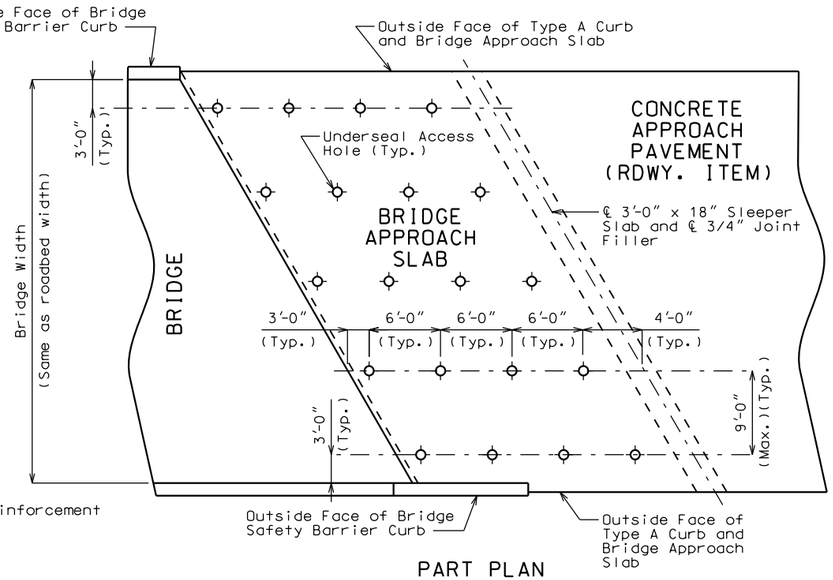

PART PLAN
(SHOWING TYPICAL UNDERSEAL ACCESS HOLE LOCATIONS)

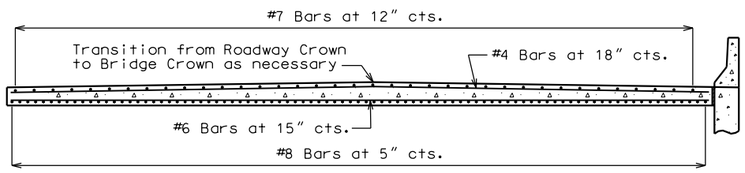

SECTION A-A

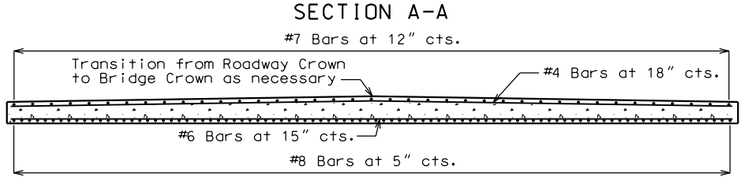

SECTION B-B

Note: With the approval of the engineer, the contractor may crown the bottom of the approach slab to match the crown of the roadway surface.

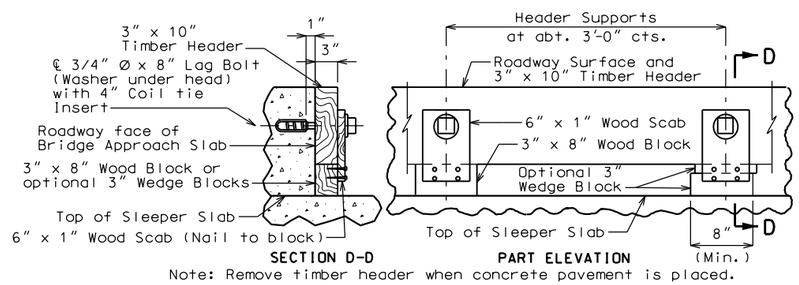

SECTION D-D PART ELEVATION

Note: Remove timber header when concrete pavement is placed.

DETAILS OF TIMBER HEADER

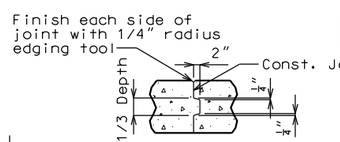

CONST. JOINT DETAIL
(IF REQUIRED)

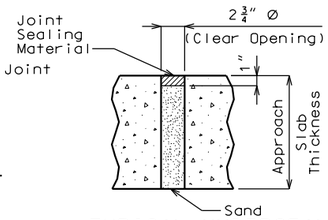

TYPICAL UNDERSEAL ACCESS HOLE DETAIL

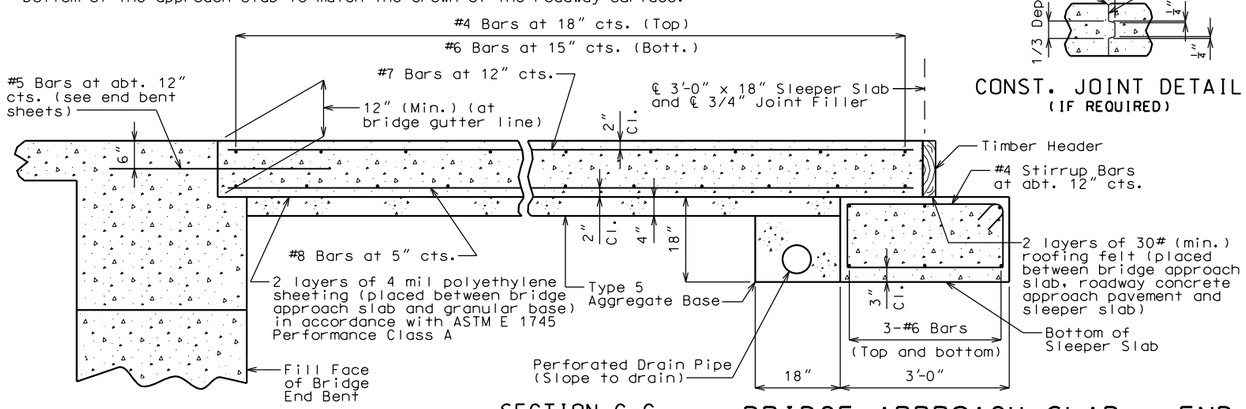

SECTION C-C

BRIDGE APPROACH SLAB - END BENT 4

Note: This drawing is not to scale. Follow dimensions.

GENERAL NOTES:

All concrete for the bridge approach slab and sleeper slab shall be in accordance with Sec 503 (f'c = 4,000 psi).

All joint filler shall be in accordance with Sec 1057 for preformed fiber expansion joint filler, except as noted.

The reinforcing steel in the bridge approach slab and the sleeper slab shall be epoxy coated Grade 60 with Fy = 60,000 psi.

Minimum clearance to reinforcing steel shall be 1 1/2", unless otherwise shown.

The reinforcing steel in the bridge approach slab and the sleeper slab shall be continuous. The transverse reinforcing steel may be made continuous by lap splicing the #4 & #6 bars 18" and 2'-2", respectively.

Mechanical bar splices shall be in accordance with Sec 706.

(✱) Seal joint between vertical face of approach slab and wing with "Silicone Joint Sealant for Saw Cut and Formed Joints" in accordance with Sec 717.

Hooks and bends shall be in accordance with the CRSI Manual of Standard Practice for Detailing Reinforced Concrete Structures, Stirrup and Tie Dimensions.

The contractor shall pour and satisfactorily finish the bridge or semi-deep slab before pouring the bridge approach slabs.

Longitudinal construction joints in approach slab and sleeper slab shall be aligned with longitudinal construction joints in bridge or semi-deep slab.

Payment for furnishing all materials, labor and excavation necessary to construct the approach slab, including the timber header, sleeper slab, underdrain, Type 5 aggregate base, joint filler and all other appurtenances and incidental work as shown on this sheet, complete in place, will be considered completely covered by the contract unit price for Bridge Approach Slab (Bridge) per square yard.

For Concrete Approach Pavement details, see roadway plans.

See Missouri Standard Plans Drawing 609.00 for details of Type A Curb.

At the contractor's option, Grade 40 reinforcement may be substituted for the Grade 60 #5 dowel bars connecting the bridge approach slab to the bridge abutment. No additional payment will be made for this substitution.

When Grade 40 reinforcement is substituted for the Grade 60 #5 dowel bars connecting the bridge approach slab to the bridge abutment, the reinforcement may be bent up to 90 degrees with a 2" minimum radius near the abutment to allow compaction of the backfill material near the abutment. Damage to epoxy coating shall be repaired in accordance with Sec 710.

Drain pipe may be either 6" diameter corrugated metallic-coated pipe underdrain, 4" diameter corrugated polyvinyl chloride (PVC) drain pipe, or 4" diameter corrugated polyethylene (PE) drain pipe.

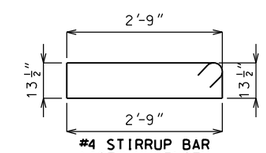

#4 STIRRUP BAR
(ACTUAL LENGTH = 8'-3")

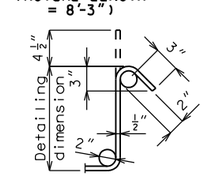

TYPICAL 135° STIRRUP HOOK DIMENSIONS BENDING DIAGRAM

Note:
Nominal lengths are based on out to out dimensions shown in bending diagram and are listed for fabricators use (nearest inch).

STATE OF MISSOURI
STEPHEN M. SEELE
NUMBER E-24698
REGISTERED PROFESSIONAL ENGINEER

DATE PREPARED	
1/20/2016	
STATE	SHEET NO.
MO	48
ROUTE	
STROUP	
COUNTY	
JEFFERSON	
JOB NO.	
13-0079	
PROJECT NO.	
STP-5403 (656)	
BRIDGE NO.	
24700121	

DESCRIPTION

DATE

IF A SEAL IS PRESENT ON THIS SHEET IT HAS BEEN ELECTRONICALLY SEALED AND DATED.

JEFFERSON COUNTY PUBLIC WORKS DEPARTMENT
P.O. BOX 100
HILLSBORO, MO 63050
(636-797-5340) PHONE
(636-797-5565) FAX

ABNA
4140 LINDELL BOULEVARD
ST. LOUIS, MO 63108
PH. 314-454-0222
CERTIFICATE/LICENSE NO. 001501

Detailed Jan 2016
Checked Jan 2016

J:\2013\0079\Cadd\Bridge\B_24700121_034_App Slab End Bent 4.dgn 11:32:03 AM 1/20/2016

BILL OF REINFORCING STEEL

NO. REQ'D.	MARK NO. SIZE MARK	LOCATION	EPOXY (E)	SHAPE NO.	STIRRUP (S)	SUBSTR. (X)	VARIES (V)	NO. EACH	B FT. IN.	C FT. IN.	D FT. IN.	E FT. IN.	F FT. IN.	H FT. IN.	K FT. IN.	NOMINAL LENGTH FT. IN.	ACTUAL LENGTH FT. IN.	WEIGHT LBS.
		SUBSTRUCTURE																
		INT. BENT 2																
18	6 D200	BENT CAP		20		X			2 6.000							2 6	2 6	68
18	9 H200	BENT CAP		18		X			52 9.000							55 3	55 3	3381
6	6 H201	BENT CAP		20		X			52 9.000							52 9	52 9	475
6	5 H202	BENT CAP		20		X			13 3.000							13 3	13 3	83
12	5 H203	BENT CAP		19		X			18 2.000	16.000						19 6	19 4	242
6	5 H204	BENT CAP		19		X			10 6.000	16.000						11 10	11 8	73
10	6 H205	BENT CAP		10		X				13.000	3 0.500					5 3	4 11	74
3	4 P200	COLUMN		22		X			28 0.000	2 9.000						981 1	981 1	1966
21	4 P201	COLUMN		34		X			2 9.000							9 7	9 7	134
18	5 U200	BENT CAP		13	S	X			2 0.000	4 3.500	2 0.000	4 3.500				12 7	12 3	230
10	5 U201	BENT CAP		13	S	X			2 0.000	3 10.500	2 0.000	3 10.500				11 9	11 5	119
54	5 U202	BENT CAP		13	S	X			2 0.000	4 5.000	2 0.000	4 5.000				13 0	12 8	713
56	5 U203	BENT CAP		13	S	X			2 0.000	4 5.000	2 0.000	4 5.000				13 0	12 8	740
8	5 U204	BENT CAP		13	S	X			2 0.000	4 11.500	2 0.000	4 11.500				13 11	13 7	113
18	5 U205	BENT CAP		13	S	X			2 0.000	4 6.500	2 0.000	4 6.500				13 1	12 9	239
16	5 U206	BENT CAP		10		X				2 0.000	4 1.000					8 1	7 10	123
8	5 U207	BENT CAP		10		X				2 0.000	3 11.750					8 0	7 9	65
8	5 U208	BENT CAP		10		X				2 0.000	4 9.000					8 9	8 6	71
16	5 U209	BENT CAP		10		X				2 0.000	4 9.000					8 9	8 6	142
54	9 V200	COLUMN		20		X			30 8.000							30 0	30 0	5631

BILL OF REINFORCING STEEL

NO. REQ'D.	MARK NO. SIZE MARK	LOCATION	EPOXY (E)	SHAPE NO.	STIRRUP (S)	SUBSTR. (X)	VARIES (V)	NO. EACH	B FT. IN.	C FT. IN.	D FT. IN.	E FT. IN.	F FT. IN.	H FT. IN.	K FT. IN.	NOMINAL LENGTH FT. IN.	ACTUAL LENGTH FT. IN.	WEIGHT LBS.
		INT. BENT 3																
18	6 D300	BENT CAP		20		X			2 6.000							2 6	2 6	68
18	9 H300	BENT CAP		18		X			52 9.000							55 3	55 3	3381
6	6 H301	BENT CAP		20		X			52 9.000							52 9	52 9	475
6	5 H302	BENT CAP		20		X			13 3.000							13 3	13 3	83
12	5 H303	BENT CAP		19		X			18 2.000	16.000						19 6	19 4	242
6	5 H304	BENT CAP		19		X			10 6.000	16.000						11 10	11 8	73
10	6 H305	BENT CAP		10		X				13.000	3 0.500					5 3	4 11	74
3	4 P300	COLUMN		22		X			35 0.000	2 9.000						1220 9	1220 9	2446
21	4 P301	COLUMN		34		X			2 9.000							9 7	9 7	134
18	5 U300	BENT CAP		13	S	X			2 0.000	4 3.500	2 0.000	4 3.500				12 7	12 3	230
10	5 U301	BENT CAP		13	S	X			2 0.000	3 10.500	2 0.000	3 10.500				11 9	11 5	119
54	5 U302	BENT CAP		13	S	X			2 0.000	4 5.000	2 0.000	4 5.000				13 0	12 8	713
56	5 U303	BENT CAP		13	S	X			2 0.000	4 5.000	2 0.000	4 5.000				13 0	12 8	740
8	5 U304	BENT CAP		13	S	X			2 0.000	4 11.500	2 0.000	4 11.500				13 11	13 7	113
18	5 U305	BENT CAP		13	S	X			2 0.000	4 6.500	2 0.000	4 6.500				13 1	12 9	239
16	5 U306	BENT CAP		10		X				2 0.000	4 1.000					8 1	7 10	123
8	5 U307	BENT CAP		10		X				2 0.000	3 11.500					8 0	7 9	65
8	5 U308	BENT CAP		10		X				2 0.000	4 10.000					8 10	8 7	72
16	5 U309	BENT CAP		10		X				2 0.000	4 10.500					8 11	8 8	145
54	9 V300	COLUMN		20		X			37 0.000							37 0	37 0	6794

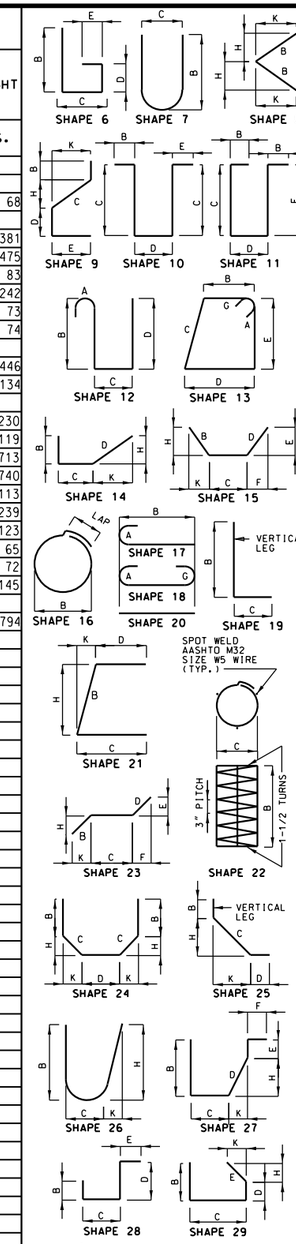

BENDING DIAGRAMS

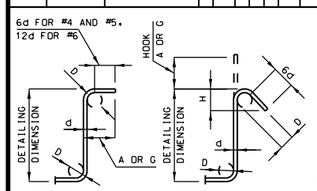

STIRRUP HOOK DIMENSIONS				
GRADES 40 - 50 - 60 KSI				
BAR SIZE	D (IN.)	90° HOOK	135° HOOK	
		HOOK A OR G	HOOK A OR G	APPROX. H
#4	2"	4 1/2"	4 1/2"	3"
#5	2 1/2"	6"	5 1/2"	3 3/4"
#6	4 1/2"	12"	8"	4 1/2"

NOTE: UNLESS OTHERWISE NOTED DIAMETER "D" IS THE SAME FOR ALL BENDS AND HOOKS ON A BAR.

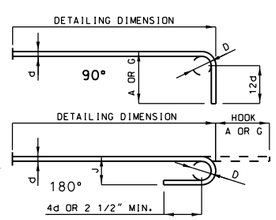

END HOOK DIMENSIONS				
BAR SIZE	D (IN.)	ALL GRADES		
		180° HOOKS		90° HOOKS
		A OR G	J	A OR G
#3	2 1/4"	5"	3"	6"
#4	3"	6"	4"	8"
#5	3 3/4"	7"	5"	10"
#6	4 1/2"	8"	6"	12"
#7	5 1/4"	10"	7"	14"
#8	6"	11"	8"	16"
#9	9 1/2"	15"	11 3/4"	19"
#10	10 3/4"	17"	13 1/4"	22"
#11	12"	19"	14 3/4"	2'-0"
#14	18 1/4"	2'-3"	21 3/4"	2'-7"

NOTE:
ALL STANDARD HOOKS AND BENDS OTHER THAN 180 DEGREE ARE TO BE BENT WITH SAME PROCEDURE AS FOR 90 DEGREE STANDARD HOOKS.
HOOKS AND BENDS SHALL BE IN ACCORDANCE WITH THE PROCEDURES AS SHOWN ON THIS SHEET.
E = EPOXY COATED REINFORCEMENT.
S = STIRRUP.
X = BAR IS INCLUDED IN SUBSTRUCTURE QUANTITIES.
V = BAR DIMENSIONS VARY IN EQUAL INCREMENTS BETWEEN DIMENSIONS SHOWN ON THIS LINE AND THE FOLLOWING LINE.
NO. EA. = NUMBER OF BARS OF EACH LENGTH.
NOMINAL LENGTHS ARE BASED ON OUT TO OUT DIMENSIONS SHOWN IN BENDING DIAGRAMS AND ARE LISTED FOR FABRICATORS USE. (NEAREST INCH)
ACTUAL LENGTHS ARE MEASURED ALONG CENTERLINE BAR TO THE NEAREST INCH.
PAYWEIGHTS ARE BASED ON ACTUAL LENGTHS.
FOUR ANGLE OR CHANNEL SPACERS ARE REQUIRED FOR EACH COLUMN SPIRAL. SPACERS ARE TO BE PLACED ON INSIDE OF SPIRALS. LENGTH AND WEIGHT OF COLUMN SPIRALS DO NOT INCLUDE SPLICES OR SPACERS.
REINFORCING STEEL (GRADE 60) FY = 60,000 PSI.

STATE OF MISSOURI
STEPHEN L. MCDONALD
NUMBER E-24698
REGISTERED PROFESSIONAL ENGINEER

DATE PREPARED
1/20/2016

STATE	SHEET NO.
MO	49

ROUTE
STROUP
COUNTY
JEFFERSON
JOB NO.
13-0079
PROJECT NO.
STP-5403 (656)
BRIDGE NO.
24700121

DATE	DESCRIPTION

IF A SEAL IS PRESENT ON THIS SHEET IT HAS BEEN ELECTRONICALLY SEALED AND DATED.

JEFFERSON COUNTY PUBLIC WORKS
DEPARTMENT
P.O. BOX 100
HILLSBORO, MO 63050
(636-797-5340) PHONE
(636-797-5565) FAX

ABNA
4140 LINDELL BOULEVARD
ST. LOUIS, MO 63108
PH. 314-454-0222
CERTIFICATE/LICENSE NO. 001501

Detailed Jan 2016
Checked Jan 2016

Note: This drawing is not to scale. Follow dimensions.

BILL OF REINFORCING STEEL

NO. REQ'D.	MARK NO. SIZE	MARK NO. MARK	LOCATION	EPOXY (E)	SHAPE NO.	STIRRUP (S)	SUBSTR. (X)	VARIES (V)	NO. EACH	B FT. IN.	C FT. IN.	D FT. IN.	E FT. IN.	F FT. IN.	H FT. IN.	K FT. IN.	NOMINAL LENGTH FT. IN.	ACTUAL LENGTH FT. IN.	WEIGHT LBS.
			SUPERSTRUCTURE																
			END BENT 1																
13	6	F100	WING		23					15.000	2 8.000	15.000	1.625	4.250	1.625	4.250	5 2	5 2	101
10	6	F101	WING		23					15.000	8 9.000	15.000	4.125	18.000	4.125	18.000	11 3	11 3	169
4	6	F102	BEAM		15					4 0.000	4 3.000				2 4.000	3 0.250	8 3	8 3	50
4	6	F103	BEAM		32						4 11.000	4 3.000			2 5.000	3 5.500	9 2	8 2	49
4	6	H100	BEAM		20					56 7.000							56 7	56 7	340
8	8	H101	BEAM		20					56 7.000							56 7	56 7	1209
4	8	H102	BEAM		20					38 5.000							38 5	38 5	410
4	8	H103	BEAM		20					22 9.000							22 9	22 9	243
4	8	H104	BEAM		20					7 0.000							7 0	7 0	75
8	6	H105	DIAPHRAGM		20					4 3.000							4 3	4 3	51
15	6	H106	DIAPHRAGM		20					14 0.000							14 0	14 0	315
1	6	H107	DIAPHRAGM		20					18 3.000							18 3	18 3	27
1	6	H108	DIAPHRAGM		20					34 0.000							34 0	34 0	51
1	6	H109	DIAPHRAGM		20					49 0.000							49 0	49 0	74
1	6	H110	DIAPHRAGM		20					51 3.000							51 3	51 3	77
1	6	H111	DIAPHRAGM		20					35 8.000							35 8	35 8	54
1	6	H112	DIAPHRAGM		20					19 8.000							19 8	19 8	30
1	6	H113	DIAPHRAGM		20					57 6.000							57 6	57 6	86
4	6	H114	SLAB	E	20					57 6.000							57 6	57 6	345
52	5	H115	SLAB	E	20					2 6.000							2 6	2 6	136
4	5	H116	BEAM		23					10.500	18.000	10.500	8.500	6.000	8.500	6.000	3 3	3 2	13
24	6	H117	WING		20					23 0.000							23 0	23 0	829
6	8	H118	WING		20					23 4.000							23 4	23 4	374
2	8	H119	WING	E	20					23 4.000							23 4	23 4	125
22	6	H120	WING		20					24 0.000							24 0	24 0	793
6	8	H121	WING		20					24 4.000							24 4	24 4	390
2	8	H122	WING	E	20					24 4.000							24 4	24 4	130
13	5	U100	BEAM		10						8 0.000	3 4.250					19 4	19 1	259
10	5	U101	BEAM		10						7 0.000	3 4.250					17 4	17 1	178
13	5	U102	BEAM		10						6 0.000	3 4.250					15 4	15 1	205
5	4	U103	BEAM		13	S				3 4.250	5 9.000	3 4.250	5 9.000				18 12	18 8	62
5	4	U104	BEAM		13	S				3 4.250	4 9.000	3 4.250	4 9.000				16 12	16 8	56
5	4	U105	BEAM		13	S				3 4.250	3 9.000	3 4.250	3 9.000				14 12	14 8	49
5	4	U106	BEAM		13	S				3 4.250	2 9.000	3 4.250	2 9.000				12 12	12 8	42
48	6	U107	DIAPHRAGM		19					3 3.000	3 4.250						6 7	6 5	463
48	5	U108	DIAPHRAGM	E	19					4 3.000	2 9.000						7 0	6 10	342
73	6	U109	DIAPHRAGM	E	19					3 0.000	3 4.250						6 4	6 2	676
4	5	V100	BEAM		20					8 0.000							8 0	8 0	33
4	5	V101	BEAM		20					6 0.000							6 0	6 0	25
4	5	V102	BEAM		20					5 0.000							5 0	5 0	21
12	5	V103	DIAPHRAGM		20					3 3.000							3 3	3 3	41
50	6	V104	WING		20			V	2	8 0.000							8 0	8 0	
			INCR=1.125IN							10 2.000							10 2	10 2	682
2	8	V105	WING		20					8 0.000							8 0	8 0	43
48	6	V106	WING		20			V	2	5 0.000							5 0	5 0	
			INCR=1.125IN							7 1.000							7 1	7 1	436
2	8	V107	WING		20					5 0.000							5 0	5 0	27

BILL OF REINFORCING STEEL

NO. REQ'D.	MARK NO. SIZE	MARK NO. MARK	LOCATION	EPOXY (E)	SHAPE NO.	STIRRUP (S)	SUBSTR. (X)	VARIES (V)	NO. EACH	B FT. IN.	C FT. IN.	D FT. IN.	E FT. IN.	F FT. IN.	H FT. IN.	K FT. IN.	NOMINAL LENGTH FT. IN.	ACTUAL LENGTH FT. IN.	WEIGHT LBS.
			END BENT 4																
20	6	F400	WING		23					15.000	8 7.750	15.000	3.750	14.500	3.750	14.500	11 2	11 2	335
18	6	F401	WING		23					15.000	9 7.000	15.000	2.750	14.750	2.750	14.750	12 1	12 1	327
4	6	F402	BEAM		15					4 2.500	4 0.000				2 5.000	4 11.750	8 3	8 2	49
4	6	F403	BEAM		32					4 4.000	4 9.000				2 3.000	4 4.000	9 1	8 11	54
16	8	H400	BEAM		20					33 10.000							33 10	33 10	1445
18	6	H401	BEAM		20					32 9.000							32 9	32 9	885
8	6	H402	BEAM		20			V	2	11 4.000							11 4	11 4	
			INCR=138.5IN							45 11.500							45 11	45 11	344
4	8	H403	BEAM		20					39 9.000							39 9	39 9	425
4	8	H404	BEAM		20					23 1.000							23 1	23 1	247
4	8	H405	BEAM		20					7 4.000							7 4	7 4	78
8	6	H406	DIAPHRAGM		20					3 6.000							3 6	3 6	42
15	6	H407	DIAPHRAGM		20					13 0.000							13 0	13 0	293
1	6	H408	DIAPHRAGM		20					24 3.000							24 3	24 3	36
1	6	H409	DIAPHRAGM		20					40 0.000							40 0	40 0	60
1	6	H410	DIAPHRAGM		20					55 8.000							55 8	55 8	84
1	6	H411	DIAPHRAGM		20					52 3.000							52 3	52 3	78
1	6	H412	DIAPHRAGM		20					36 7.000							36 7	36 7	55
1	6	H413	DIAPHRAGM		20					20 10.000							20 10	20 10	31
8	6	H414	APPR. SLAB	E	20					32 9.000							32 9	32 9	394
53	5	H415	APPR. SLAB	E	20					2 6.000							2 6	2 6	138
4	4	H416	BEAM		23					10.500	18.000	10.500	8.500	6.000	8.500	6.000	3 3	3 2	8
38	6	H417	WING		20					24 7.000							24 7	24 7	1403
6	8	H418	WING		20					24 7.000							24 7	24 7	394
2	8	H419	WING	E	20					24 7.000							24 7	24 7	131
38	6	H420	WING		20					25 2.000							25 2	25 2	1436
6	8	H421	WING		20					25 2.000							25 2	25 2	403
2	8	H422	WING	E	20					25 2.000							25 2	25 2	134
64	5	U400	BEAM		10						2 6.000	3 4.250					8 4	8 1	540
68	6	U401	DIAPHRAGM		19					3 0.000	3 4.250						6 4	6 2	630
68	5	U402	DIAPHRAGM		19					3 11.000	2 10.000						6 9	6 7	467
74	6	U403	DIAPHRAGM		19					2 4.000	3 4.250						5 8	5 6	611
48	5	V400	BEAM		20					10 8.000							10 8	10 8	534
20	5	V401	BEAM		20					6 11.000							6 11	6 11	144
12	6	V402	DIAPHRAGM		20					3 4.000							3 4	3 4	60
48	6	V403	WING		20					13 3.000							13 3	13 3	955
2	8	V404	WING		20					13 3.000							13 3	13 3	71
48	6	V405	WING		20			V	2	13 3.000							13 3	13 3	
			INCR=0.5IN							14 3.000							14 3	14 3	991
2	8	V406	WING		20					14 3.000							14 3	14 3	76

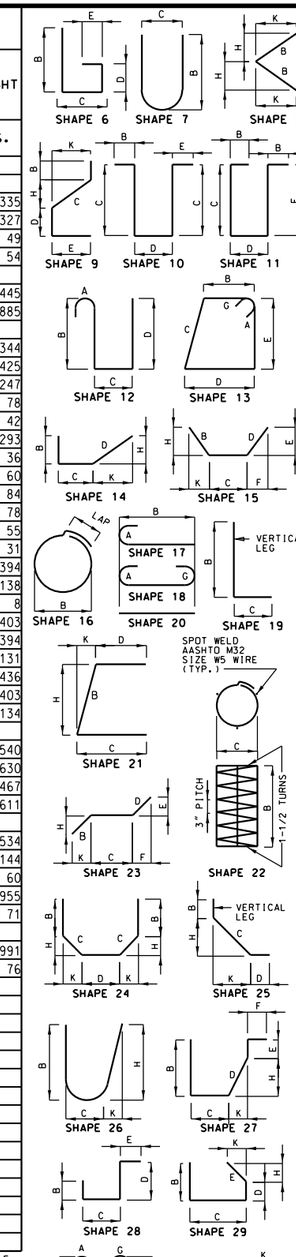

BENDING DIAGRAMS

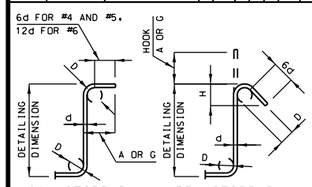

STIRRUP HOOK DIMENSIONS			
GRADES 40 - 50 - 60 KSI			
BAR SIZE	D (IN.)	90° HOOK: HOOK A OR G	135° HOOK: HOOK A OR G	135° HOOK: APPROX. H
#4	2"	4 1/2"	4 1/2"	3"
#5	2 1/2"	6"	5 1/2"	3 3/4"
#6	4 1/2"	12"	8"	4 1/2"

NOTE: UNLESS OTHERWISE NOTED DIAMETER "D" IS THE SAME FOR ALL BENDS AND HOOKS ON A BAR.

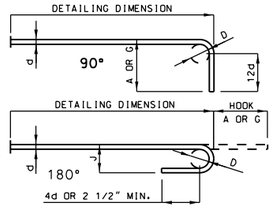

END HOOK DIMENSIONS				
		ALL GRADES		
BAR SIZE	D (IN.)	180° HOOKS: A OR G	180° HOOKS: J	90° HOOKS: A OR G
#3	2 1/4"	5"	3"	6"
#4	3"	6"	4"	8"
#5	3 3/4"	7"	5"	10"
#6	4 1/2"	8"	6"	12"
#7	5 1/4"	10"	7"	14"
#8	6"	11"	8"	16"
#9	9 1/2"	15"	11 3/4"	19"
#10	10 3/4"	17"	13 1/4"	22"
#11	12"	19"	14 3/4"	2'-0"
#14	18 1/4"	2'-3"	21 3/4"	2'-7"

NOTE:
ALL STANDARD HOOKS AND BENDS OTHER THAN 180 DEGREE ARE TO BE BENT WITH SAME PROCEDURE AS FOR 90 DEGREE STANDARD HOOKS.
HOOKS AND BENDS SHALL BE IN ACCORDANCE WITH THE PROCEDURES AS SHOWN ON THIS SHEET.
E = EPOXY COATED REINFORCEMENT.
S = STIRRUP.
X = BAR IS INCLUDED IN SUBSTRUCTURE QUANTITIES.
V = BAR DIMENSIONS VARY IN EQUAL INCREMENTS BETWEEN DIMENSIONS SHOWN ON THIS LINE AND THE FOLLOWING LINE.
NO. EA. = NUMBER OF BARS OF EACH LENGTH.
NOMINAL LENGTHS ARE BASED ON OUT TO OUT DIMENSIONS SHOWN IN BENDING DIAGRAMS AND ARE LISTED FOR FABRICATORS USE. (NEAREST INCH)
ACTUAL LENGTHS ARE MEASURED ALONG CENTERLINE BAR TO THE NEAREST INCH.
PAYWEIGHTS ARE BASED ON ACTUAL LENGTHS.
FOUR ANGLE OR CHANNEL SPACERS ARE REQUIRED FOR EACH COLUMN SPIRAL. SPACERS ARE TO BE PLACED ON INSIDE OF SPIRALS. LENGTH AND WEIGHT OF COLUMN SPIRALS DO NOT INCLUDE SPLICES OR SPACERS.
REINFORCING STEEL (GRADE 60) FY = 60,000 PSI.

STATE OF MISSOURI
STEPHEN L. MCDONALD
NUMBER E-24698
REGISTERED PROFESSIONAL ENGINEER

IF A SEAL IS PRESENT ON THIS SHEET IT HAS BEEN ELECTRONICALLY SEALED AND DATED.

DATE PREPARED	1/20/2016
STATE	MO
SHEET NO.	50
ROUTE	STROUP
COUNTY	JEFFERSON
JOB NO.	13-0079
PROJECT NO.	STP-5403 (656)
BRIDGE NO.	24700121

DESCRIPTION

DATE

JEFFERSON COUNTY PUBLIC WORKS DEPARTMENT
P.O. BOX 100
HILLSBORO, MO 63050
(636-797-5340) PHONE
(636-797-5565) FAX

ABNA
4140 LINDELL BOULEVARD
ST. LOUIS, MO 63108
PH. 314-454-0222
CERTIFICATE/LICENSE NO. 001501

Detailed Jan 2016
Checked Jan 2016

Note: This drawing is not to scale. Follow dimensions.

BILL OF REINFORCING STEEL

NO. REQ'D.	MARK NO. SIZE	MARK NO. MARK	LOCATION	EPOXY (E)	SHAPE NO.	STIRRUP (S)	SUBSTR. (X)	VARIES (V)	NO. EACH	B FT. IN.	C FT. IN.	D FT. IN.	E FT. IN.	F FT. IN.	H FT. IN.	K FT. IN.	NOMINAL LENGTH FT. IN.	ACTUAL LENGTH FT. IN.	WEIGHT LBS.
			SUPERSTRUCTURE CONT.																
			DETACHED WING																
6	5	H423	WING		20			V	2	5 4.000							5 4	5 4	
			INCR=119IN							25 2.000							25 2	25 2	95
8	5	H424	WING		20					30 0.000							30 0	30 0	250
14	5	H425	WING		20			V	2	5 1.000							5 1	5 1	
			INCR=43.625IN							26 11.000							26 11	26 11	234
2	5	H426	WING		20					31 0.000							31 0	31 0	65
14	5	H427	WING		23					20.000	17.000	2 6.500	21.500	21.500	14.250	14.250	5 8	5 7	82
14	5	H428	WING		28						4 4.000	19.000	12.000				6 11	6 8	97
2	5	H429	WING		20					30 1.500							30 2	30 2	63
5	5	V407	WING		20					12 2.000							12 2	12 2	63
68	5	V408	WING		20			V	2	6 8.000							6 8	6 8	
			INCR=2IN							12 0.000							12 0	12 0	662
			INT. DIAPH. BENT 2																
6	6	H250	DIAPHRAGM		20					6 8.000							6 8	6 8	60
18	4	H251	DIAPHRAGM		20					14 9.000							14 9	14 9	177
6	6	H252	DIAPHRAGM		20					14 2.000							14 2	14 2	128
4	5	H253	DIAPHRAGM		23					15.000	17.000	15.000	12.250	8.500	12.250	8.500	3 11	3 10	16
4	5	H254	DIAPHRAGM		14						20.000	15.000			12.250	8.625	2 11	2 10	12
16	5	H255	DIAPHRAGM		19					2 6.000	10.000						3 4	3 2	53
6	6	U250	DIAPHRAGM		10						3 8.000	4 8.000					12 0	11 8	105
18	4	U251	DIAPHRAGM		10						3 3.000	4 8.000					11 2	10 10	134
12	6	U252	DIAPHRAGM		19					3 8.000	14.000						4 10	4 8	84
36	4	U253	DIAPHRAGM		19					3 3.000	12.000						4 3	4 2	100
8	5	V250	DIAPHRAGM		20					4 5.500							4 6	4 6	38
			INT. DIAPH. BENT 3																
6	6	H350	DIAPHRAGM		20					6 8.000							6 8	6 8	60
18	4	H351	DIAPHRAGM		20					14 9.000							14 9	14 9	177
6	6	H352	DIAPHRAGM		20					14 2.000							14 2	14 2	128
4	5	H353	DIAPHRAGM		23					15.000	17.000	15.000	12.250	8.500	12.250	8.500	3 11	3 10	16
4	5	H354	DIAPHRAGM		14						20.000	15.000			12.250	8.625	2 11	2 10	12
16	5	H355	DIAPHRAGM		19					2 6.000	10.000						3 4	3 2	53
6	6	U350	DIAPHRAGM		10						3 8.000	4 8.000					12 0	11 8	105
18	4	U351	DIAPHRAGM		10						3 3.000	4 8.000					11 2	10 10	134
12	6	U352	DIAPHRAGM		19					3 8.000	14.000						4 10	4 8	84
36	4	U353	DIAPHRAGM		19					3 3.000	12.000						4 3	4 2	100
8	5	V350	DIAPHRAGM		20					4 5.500							4 6	4 6	38

BILL OF REINFORCING STEEL

NO. REQ'D.	MARK NO. SIZE	MARK NO. MARK	LOCATION	EPOXY (E)	SHAPE NO.	STIRRUP (S)	SUBSTR. (X)	VARIES (V)	NO. EACH	B FT. IN.	C FT. IN.	D FT. IN.	E FT. IN.	F FT. IN.	H FT. IN.	K FT. IN.	NOMINAL LENGTH FT. IN.	ACTUAL LENGTH FT. IN.	WEIGHT LBS.
			SLAB																
332	5	S1	SLAB	E	20					2 10.000							2 10	2 10	981
51	5	S2	SLAB	E	20					45 9.000							45 9	45 9	2434
174	5	S3	SLAB	E	20			V	2	2 6.000							2 6	2 6	
			INCR=3.75IN							29 6.000							29 6	29 6	2904
253	5	S4	SLAB	E	20					32 4.000							32 4	32 4	8532
104	6	S5	SLAB	E	20					40 0.000							40 0	40 0	6248
			BARRIERS																
197	5	K1	BARRIER	E	19					3 1.000	5.125						3 6	3 5	702
197	5	K2	BARRIER	E	14					5.125	19.125	18.000			2.000	17.875	3 6	3 5	702
149	5	K3	BARRIER	E	27					3 10.000	5.125	12.000	3 1.250		9.875	5.875	8 4	8 2	860
33	5	K4	BARRIER	E	7					3 10.000	6.000						7 11	7 10	270
3	5	K5	BARRIER	E	25					4.750	6.750	3 4.500			4.000	5.500	4 4	4 3	13
3	5	K6	BARRIER	E	25					4.375	7.875	3 3.500			4.500	6.500	4 4	4 3	13
3	5	K7	BARRIER	E	25					4.375	9.625	3 2.125			5.500	7.875	4 4	4 3	13
3	5	K8	BARRIER	E	25					4.375	11.125	3 7.500			6.500	9.250	4 11	4 10	15
48	5	K9	BARRIER	E	20					5 7.000							5 7	5 7	280
30	4	K10	BARRIER	E	20					11 1.000							11 1	11 1	222
4	5	K11	BARRIER	E	8					2 2.250					2 2.000	2.375	4 5	4 4	18
3	4	K12	BARRIER	E	27					3 10.000	5.125	12.000	3.125	6.000	9.875	6.875	6 0	5 9	12
3	4	K13	BARRIER	E	20					2 0.000							2 0	2 0	4
1	5	K14	BARRIER	E	27						4.750	6.750	6.000	6.000	5.500	4.000	1 12	1 9	2
1	5	K15	BARRIER	E	27						4.375	7.875	6.000	6.000	6.500	4.500	2 0	1 10	2
1	5	K16	BARRIER	E	27						4.375	9.625	6.000	6.000	7.875	5.500	2 2	1 12	2
1	5	K17	BARRIER	E	27						4.375	11.125	6.000	6.000	9.250	6.500	2 3	2 1	2
4	5	K18	BARRIER	E	27					16.000	5.125	12.000	6.000	6.000	9.875	6.875	3 9	3 5	14
11	5	K19	BARRIER	E	11					6.000	16.000	4.000	16.000				4 0	3 6	40
499	5	R1	BARRIER	E	26					2 6.000	4.250				2 6.000	3.000	5 4	5 3	2732
499	5	R3	BARRIER	E	19					17.000	6.000						1 11	1 9	911
499	5	R4	BARRIER	E	27						6.000	11.250	7.000	12.000	9.250	6.325	3 0	2 10	1475
56	5	R5	BARRIER	E	20					9 8.000							9 8	9 8	565
14	5	R6	BARRIER	E	20					37 2.000							37 2	37 2	543
14	5	R7	BARRIER	E	20					49 8.000							49 8	49 8	725
7	5	R8	BARRIER	E	20					36 8.000							36 8	36 8	268
7	5	R9	BARRIER	E	20					39 1.000							39 1	39 1	285
46	5	C1	SLIP FORM	E	20					10 0.000							10 0	10 0	479
2	5	C2	SLIP FORM	E	20					5 0.000							5 0	5 0	10

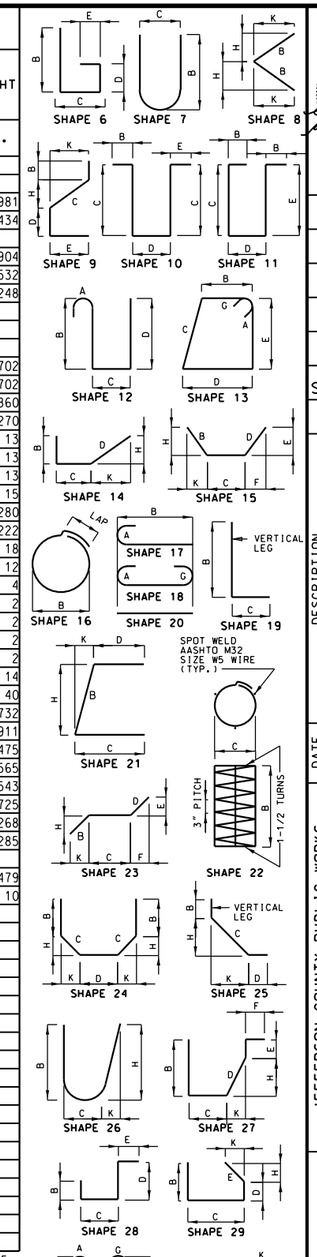

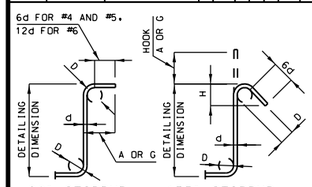

STIRRUP HOOK DIMENSIONS				
GRADES 40 - 50 - 60 KSI				
BAR SIZE	D (IN.)	90° HOOK	135° HOOK	
		HOOK A OR G	HOOK A OR G	APPROX. H
#4	2"	4 1/2"	4 1/2"	3"
#5	2 1/2"	6"	5 1/2"	3 3/4"
#6	4 1/2"	12"	8"	4 1/2"

NOTE: UNLESS OTHERWISE NOTED DIAMETER "D" IS THE SAME FOR ALL BENDS AND HOOKS ON A BAR.

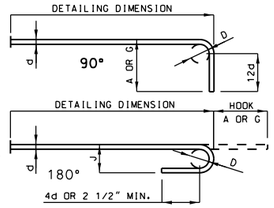

END HOOK DIMENSIONS				
BAR SIZE	D (IN.)	ALL GRADES		
		180° HOOKS		90° HOOKS
		A OR G	J	A OR G
#3	2 1/4"	5"	3"	6"
#4	3"	6"	4"	8"
#5	3 3/4"	7"	5"	10"
#6	4 1/2"	8"	6"	12"
#7	5 1/4"	10"	7"	14"
#8	6"	11"	8"	16"
#9	9 1/2"	15"	11 3/4"	19"
#10	10 3/4"	17"	13 1/4"	22"
#11	12"	19"	14 3/4"	2'-0"
#14	18 1/4"	2'-3"	21 3/4"	2'-7"

NOTE:
ALL STANDARD HOOKS AND BENDS OTHER THAN 180 DEGREE ARE TO BE BENT WITH SAME PROCEDURE AS FOR 90 DEGREE STANDARD HOOKS.
HOOKS AND BENDS SHALL BE IN ACCORDANCE WITH THE PROCEDURES AS SHOWN ON THIS SHEET.
E = EPOXY COATED REINFORCEMENT.
S = STIRRUP.
X = BAR IS INCLUDED IN SUBSTRUCTURE QUANTITIES.
V = BAR DIMENSIONS VARY IN EQUAL INCREMENTS BETWEEN DIMENSIONS SHOWN ON THIS LINE AND THE FOLLOWING LINE.
NO. EA. = NUMBER OF BARS OF EACH LENGTH.
NOMINAL LENGTHS ARE BASED ON OUT TO OUT DIMENSIONS SHOWN IN BENDING DIAGRAMS AND ARE LISTED FOR FABRICATORS USE. (NEAREST INCH)
ACTUAL LENGTHS ARE MEASURED ALONG CENTERLINE BAR TO THE NEAREST INCH.
PAYWEIGHTS ARE BASED ON ACTUAL LENGTHS.
FOUR ANGLE OR CHANNEL SPACERS ARE REQUIRED FOR EACH COLUMN SPIRAL. SPACERS ARE TO BE PLACED ON INSIDE OF SPIRALS. LENGTH AND WEIGHT OF COLUMN SPIRALS DO NOT INCLUDE SPLICES OR SPACERS.
REINFORCING STEEL (GRADE 60) FY = 60,000 PSI.

Detailed Jan 2016
Checked Jan 2016

Note: This drawing is not to scale. Follow dimensions.

STATE OF MISSOURI
STEPHEN L. MCDONALD
NUMBER E-24698
REGISTERED PROFESSIONAL ENGINEER

DATE PREPARED	1/20/2016
STATE	MO
SHEET NO.	51
ROUTE	STROUP
COUNTY	JEFFERSON
JOB NO.	13-0079
PROJECT NO.	STP-5403 (656)
BRIDGE NO.	24700121

IF A SEAL IS PRESENT ON THIS SHEET IT HAS BEEN ELECTRONICALLY SEALED AND DATED.

DATE	DESCRIPTION

JEFFERSON COUNTY PUBLIC WORKS DEPARTMENT
P.O. BOX 100
HILLSBORO, MO 63050
(636-797-5340) PHONE
(636-797-5565) FAX

ABNA
4140 LINDELL BOULEVARD
ST. LOUIS, MO 63108
PH. 314-454-0222
CERTIFICATE/LICENSE NO. 001501

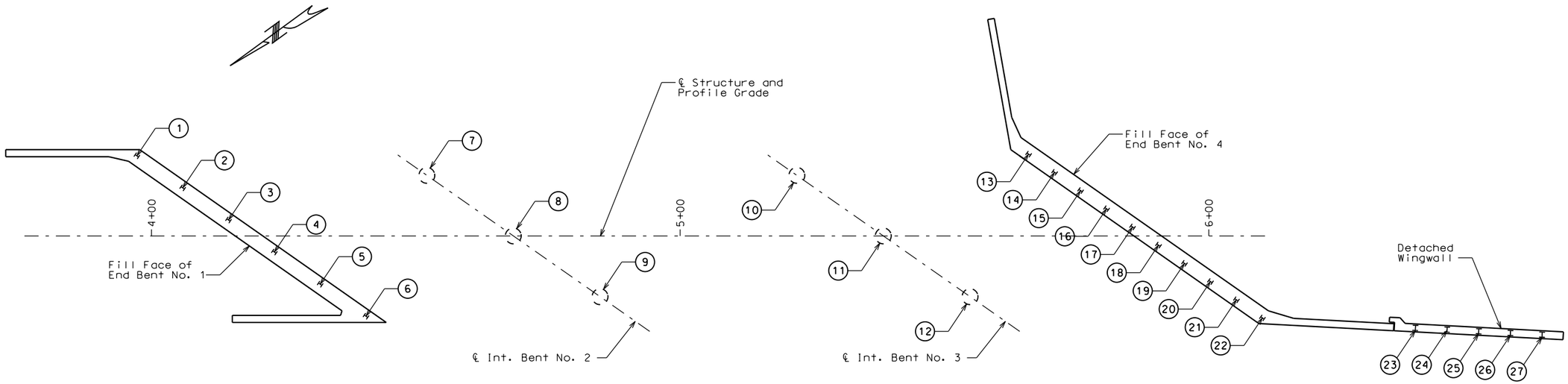

PART PLAN SHOWING PILE NUMBERING FOR RECORDING "AS BUILT PILE" DATA

NOTE: INDICATE IN REMARKS COLUMN:
A.) IF PILING WERE DRIVEN TO PRACTICAL REFUSAL.
B.) PILE BATTER IF OTHER THAN SHOWN ON BENT DETAIL SHEET.
C.) TYPE OF PILING USED.

NOTE: THIS SHEET TO BE COMPLETED BY COUNTY CONSTRUCTION PERSONNEL.

"AS BUILT PILE" DATA

PILE NO.	LENGTH IN PLACE (FT.)	COMPUTED BEARING (KIPS)	REMARKS
			END BENT NO. 1
1			
2			
3			
4			
5			
6			

"ROCK SOCKET" DATA

PILE NO.	LENGTH IN PLACE (FT.)	COMPUTED BEARING (KIPS)	REMARKS
			INTERMEDIATE BENT NO. 2
7			
8			
9			
			INTERMEDIATE BENT NO. 3
10			
11			
12			

"AS BUILT PILE" DATA

PILE NO.	LENGTH IN PLACE (FT.)	COMPUTED BEARING (KIPS)	REMARKS
			END BENT NO. 4
13			
14			
15			
16			
17			
18			
19			
20			
21			
22			
			DETACHED WINGWALL
23			
24			
25			
26			
27			

STATE OF MISSOURI
STEPHEN M. SEIBERT
NUMBER E-24698
REGISTERED PROFESSIONAL ENGINEER

DATE PREPARED 1/20/2016

STATE	SHEET NO.
MO	52

ROUTE STROUP
COUNTY JEFFERSON
JOB NO. 13-0079
PROJECT NO. STP-5403 (656)
BRIDGE NO. 24700121

DATE	DESCRIPTION

IF A SEAL IS PRESENT ON THIS SHEET IT HAS BEEN ELECTRONICALLY SEALED AND DATED.

JEFFERSON COUNTY PUBLIC WORKS DEPARTMENT
P.O. BOX 100
HILLSBORO, MO 63050
(636-797-5340) PHONE
(636-797-5565) FAX

ABNA
4140 LINDELL BOULEVARD
ST. LOUIS, MO 63108
PH. 314-454-0222
CERTIFICATE/LICENSE NO. 001501

Detailed Jan 2016
Checked Jan 2016

Note: This drawing is not to scale. Follow dimensions.

J:\2013\0079\Cadd\Bridge\B_24700121_038_As Built Pile.dgn 11:37:27 AM 1/20/2016

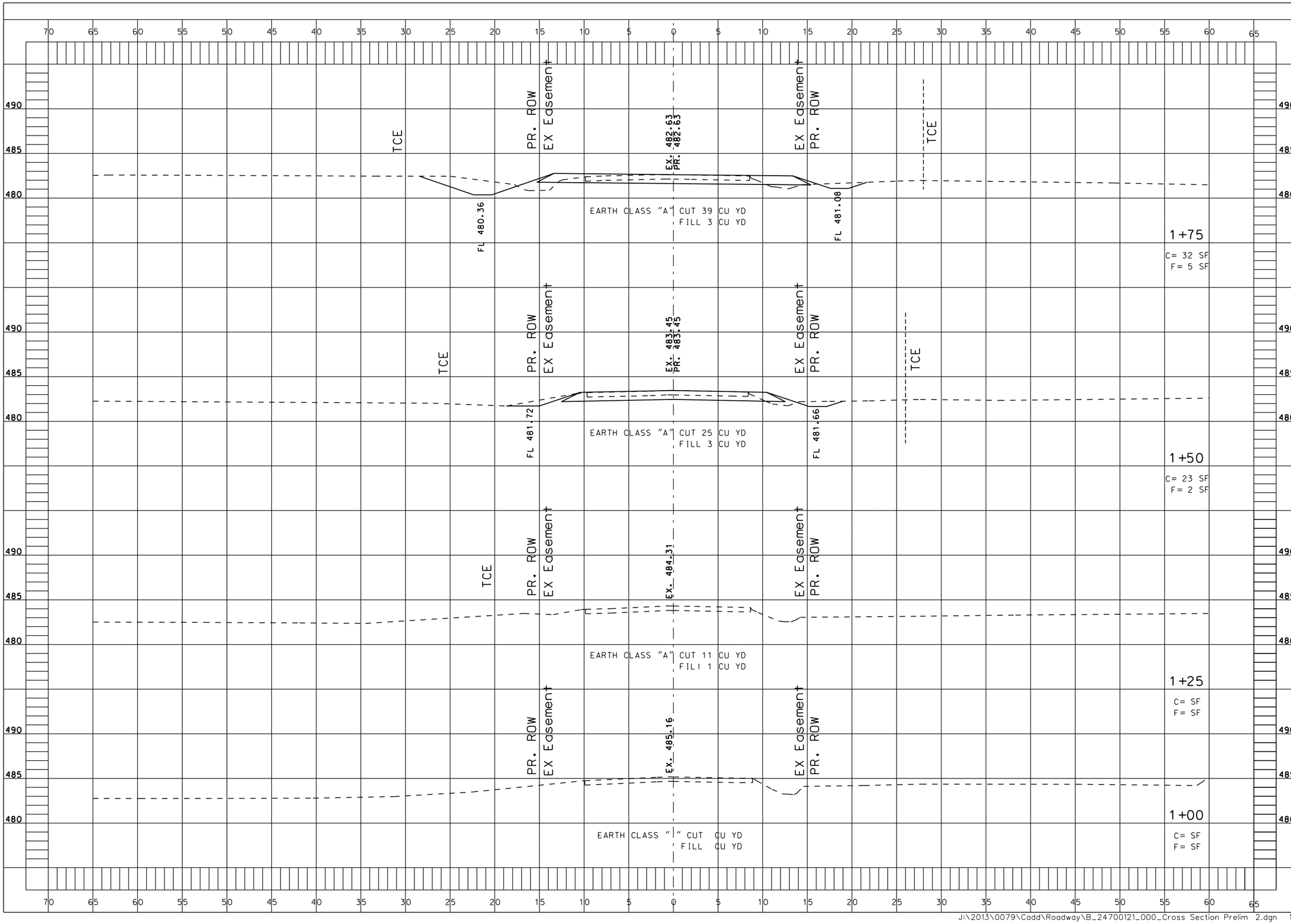

STATE OF MISSOURI
STEPHEN M. SEIBERT
NUMBER E-24698
REGISTERED PROFESSIONAL ENGINEER

DATE PREPARED	1/20/2016
STATE	MO
SHEET NO.	53
ROUTE	STROUP
COUNTY	JEFFERSON
JOB NO.	13-0079
PROJECT NO.	STP-5403 (656)
BRIDGE NO.	24700121

DATE	DESCRIPTION

JEFFERSON COUNTY PUBLIC WORKS
DEPARTMENT

P.O. BOX 100
HILLSBORO, MO 63050
(636-797-5365) FAX
(636-797-5365) PHONE

ABNA
4140 LINDELL BOULEVARD
ST. LOUIS, MO 63108
PH. 314-454-0222
CERTIFICATE/LICENSE NO. 001501

IF A SEAL IS PRESENT ON THIS SHEET IT HAS BEEN ELECTRONICALLY SEALED AND DATED.

J:\2013\0079\Cadd\Roadway\B_24700121_000_Cross Section Prelim 2.dgn 12:40:17 PM 1/20/2016

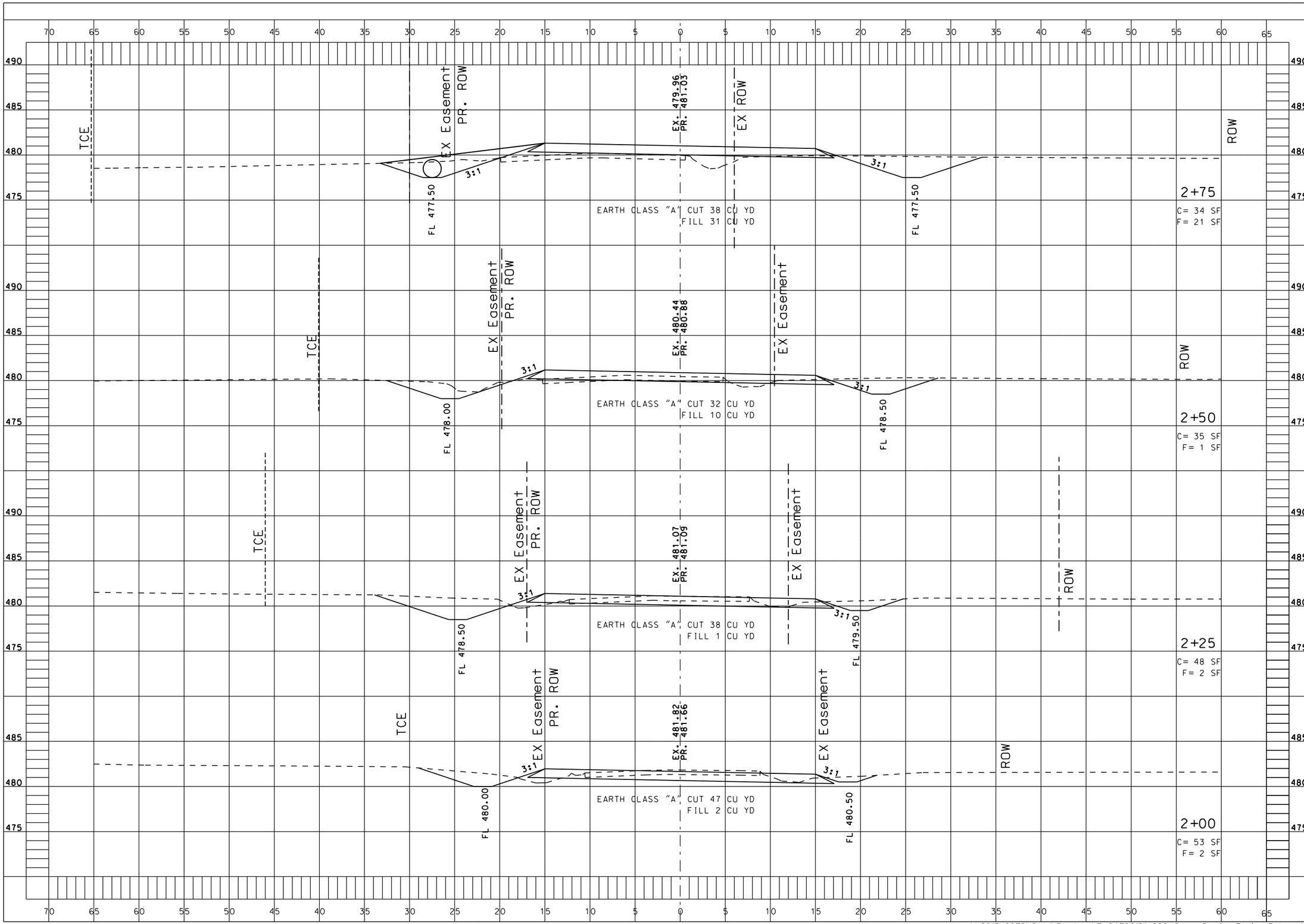

STATE OF MISSOURI
STEPHEN M. SEWELL
NUMBER E-24698
REGISTERED PROFESSIONAL ENGINEER

DATE PREPARED	1/20/2016
STATE	MO
SHEET NO.	54
ROUTE	STROUP
COUNTY	JEFFERSON
JOB NO.	13-0079
PROJECT NO.	STP-5403 (656)
BRIDGE NO.	24700121

DATE	DESCRIPTION

IF A SEAL IS PRESENT ON THIS SHEET IT HAS BEEN ELECTRONICALLY SEALED AND DATED.

JEFFERSON COUNTY PUBLIC WORKS
DEPARTMENT

P.O. BOX 100
HILLSBORO, MO 63050
(636-797-5340) PHONE
(636-797-5565) FAX

ABNA
4140 LINDELL BOULEVARD
ST. LOUIS, MO 63108
PH. 314-454-0222
CERTIFICATE/LICENSE NO. 001501

J:\2013\0079\Cadd\Roadway\B_24700121_000_Cross Section Prelim 3.dgn 12:46:52 PM 1/20/2016

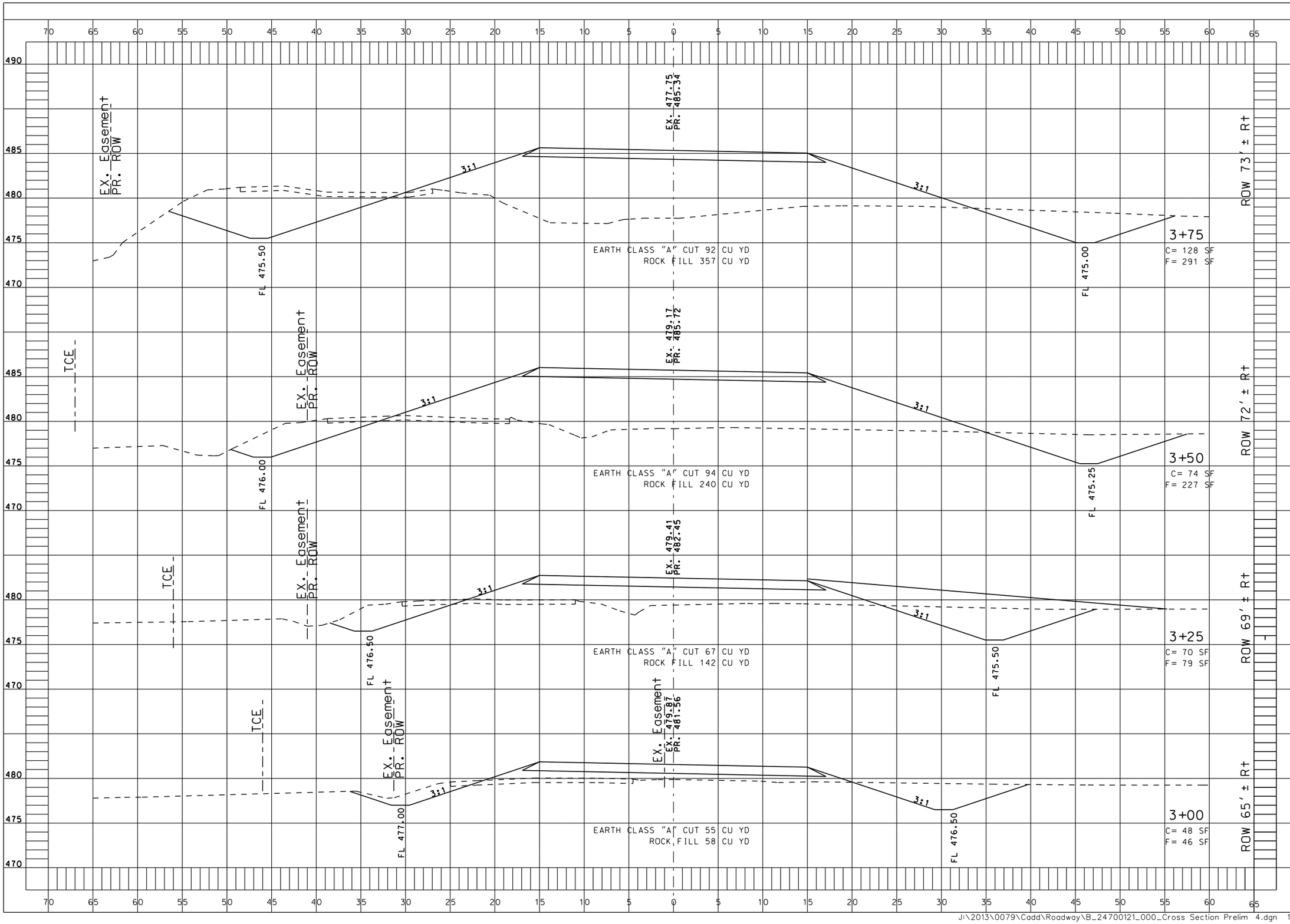

STATE OF MISSOURI
STEPHEN M. SEELY
NUMBER
E-24698
REGISTERED PROFESSIONAL ENGINEER

DATE PREPARED	1/20/2016
STATE	MO
SHEET NO.	55
ROUTE	STROUP
COUNTY	JEFFERSON
JOB NO.	13-0079
PROJECT NO.	STP-5403 (656)
BRIDGE NO.	24700121

DATE	DESCRIPTION

JEFFERSON COUNTY PUBLIC WORKS
DEPARTMENT

P.O. BOX 100
HILLSBORO, MO 63050
(636-797-5340) PHONE
(636-797-5565) FAX

ABNA
4140 LINDELL BOULEVARD
ST. LOUIS, MO 63108
PH. 314-454-0222
CERTIFICATE/LICENSE NO. 001501

IF A SEAL IS PRESENT ON THIS SHEET IT HAS BEEN ELECTRONICALLY SEALED AND DATED.

J:\2013\0079\Cadd\Roadway\B_24700121_000_Cross Section Prelim 4.dgn 12:50:57 PM 1/20/2016

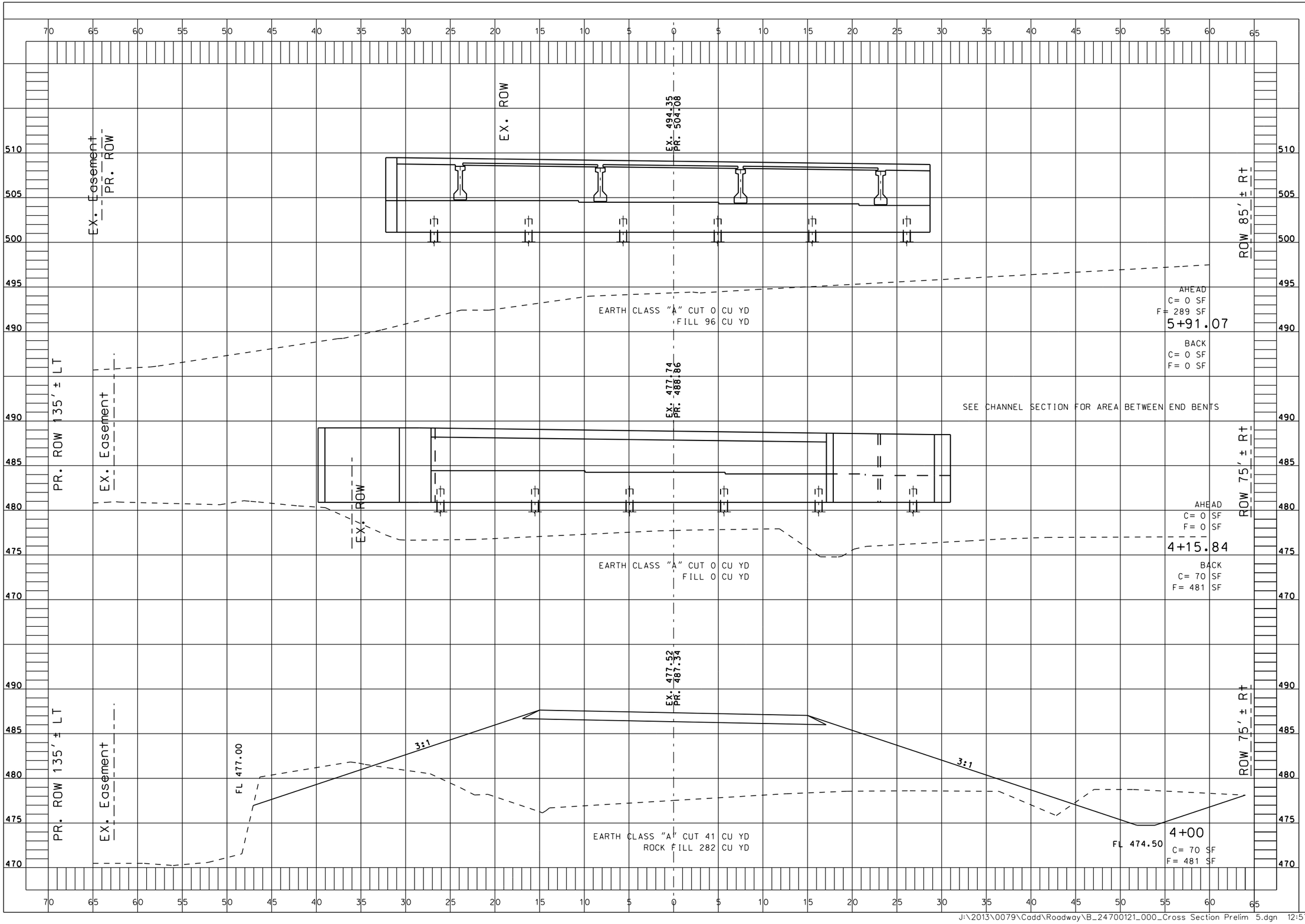

STATE OF MISSOURI
STEPHEN M. SEELY
NUMBER E-24698
REGISTERED PROFESSIONAL ENGINEER

DATE PREPARED	1/20/2016
STATE	MO
SHEET NO.	56
ROUTE	STROUP
COUNTY	JEFFERSON
JOB NO.	13-0079
PROJECT NO.	STP-5403 (656)
BRIDGE NO.	24700121

DATE	DESCRIPTION

IF A SEAL IS PRESENT ON THIS SHEET IT HAS BEEN ELECTRONICALLY SEALED AND DATED.

JEFFERSON COUNTY PUBLIC WORKS DEPARTMENT
P.O. BOX 100
HILLSBORO, MO 63050
(636-797-5340) PHONE
(636-797-5565) FAX

ABNA
4140 LINDELL BOULEVARD
ST. LOUIS, MO 63108
PH. 314-454-0222
CERTIFICATE/LICENSE NO. 001501

J:\2013\0079\Cadd\Roadway\B_24700121_000_Cross Section Prelim 5.dgn 12:57:27 PM 1/20/2016

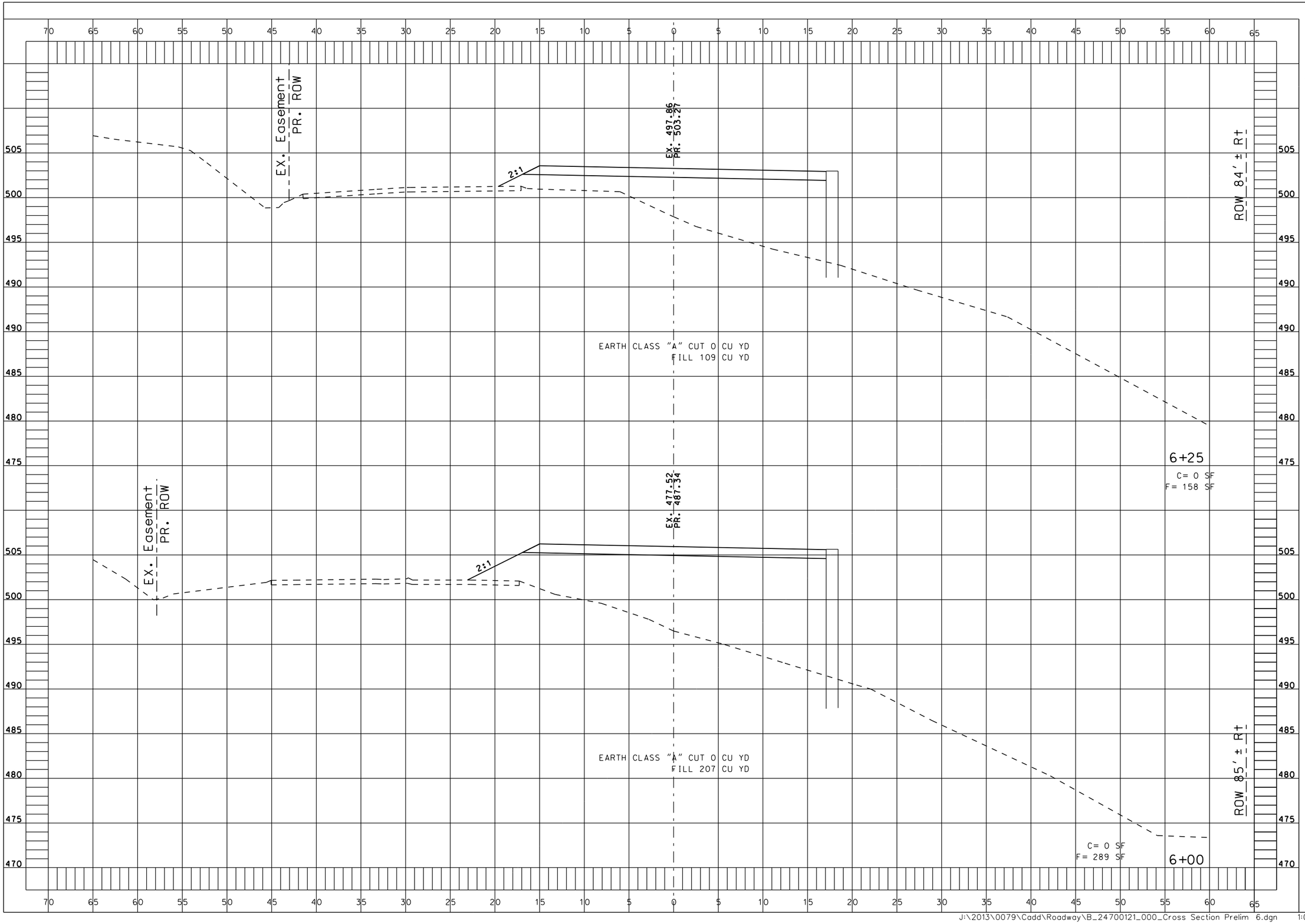

STATE OF MISSOURI
STEPHEN M. SEELY
NUMBER
E-24698
REGISTERED PROFESSIONAL ENGINEER

DATE PREPARED	1/20/2016
STATE	MO
SHEET NO.	57
ROUTE	STROUP
COUNTY	JEFFERSON
JOB NO.	13-0079
PROJECT NO.	STP-5403 (656)
BRIDGE NO.	24700121

DATE	DESCRIPTION

JEFFERSON COUNTY PUBLIC WORKS
DEPARTMENT

P.O. BOX 100
HILLSBORO, MO 63050
(636-797-5340) PHONE
(636-797-5565) FAX

ABNA
4140 LINDELL BOULEVARD
ST. LOUIS, MO 63108
PH. 314-454-0222
CERTIFICATE/LICENSE NO. 001501

IF A SEAL IS PRESENT ON THIS SHEET IT HAS BEEN ELECTRONICALLY SEALED AND DATED.

J:\2013\0079\Cadd\Roadway\B_24700121_000_Cross Section Prelim 6.dgn 1:01:10 PM 1/20/2016

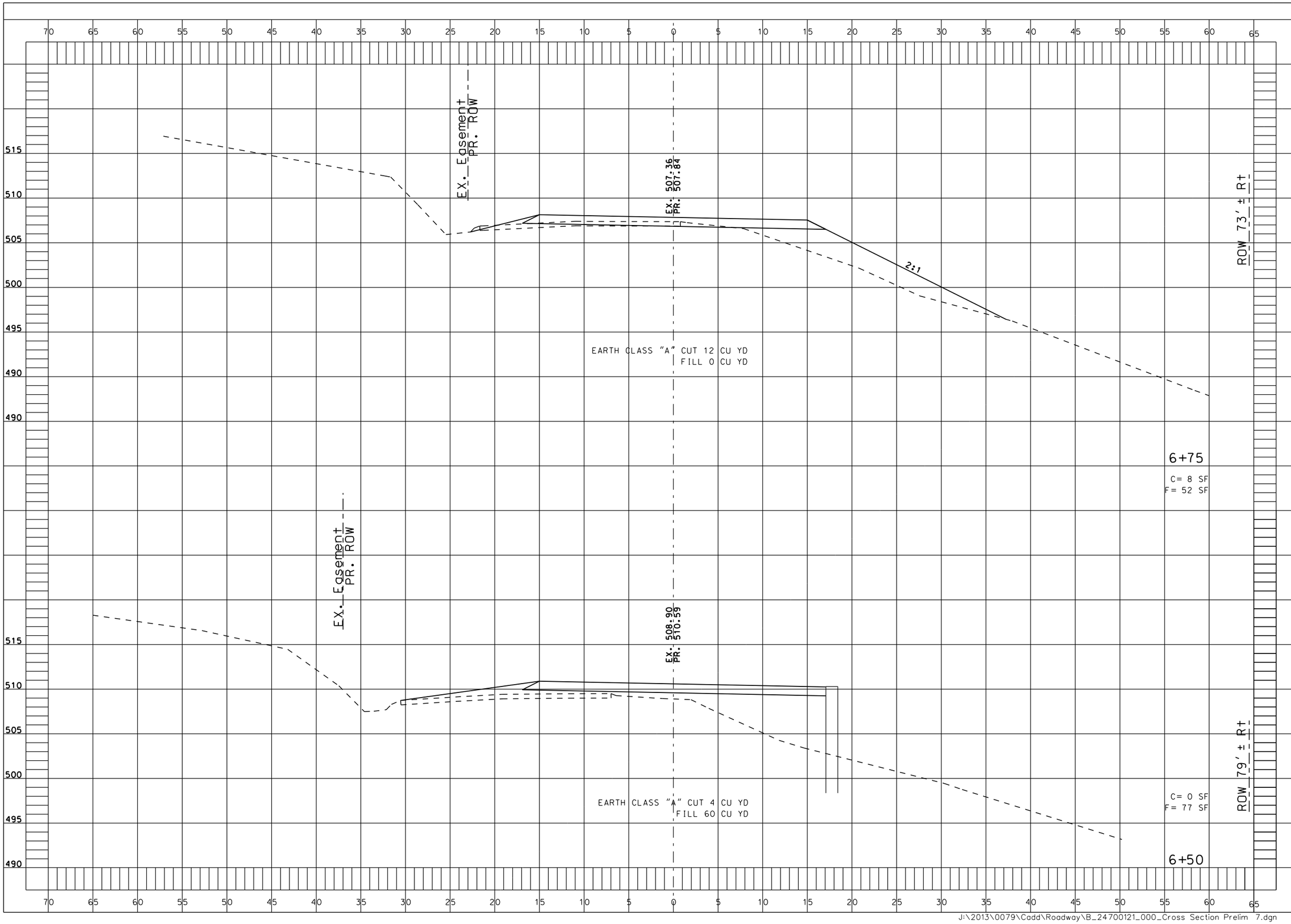

J:\2013\0079\Cadd\Roadway\B_24700121_000_Cross Section Prelim 7.dgn 1:07:26 PM 1/20/2016

STATE OF MISSOURI
STEPHEN M. SEELY
NUMBER
E-24698
REGISTERED PROFESSIONAL ENGINEER

DATE PREPARED	1/20/2016
STATE	MO
SHEET NO.	58
ROUTE	STROUP
COUNTY	JEFFERSON
JOB NO.	13-0079
PROJECT NO.	STP-5403 (656)
BRIDGE NO.	24700121

DATE	DESCRIPTION

IF A SEAL IS PRESENT ON THIS SHEET IT HAS BEEN ELECTRONICALLY SEALED AND DATED.

JEFFERSON COUNTY PUBLIC WORKS
DEPARTMENT

P.O. BOX 100
HILLSBORO, MO 63050
(636-797-5365) PHONE
(636-797-5565) FAX

ABNA
4140 LINDELL BOULEVARD
ST. LOUIS, MO 63108
PH. 314-454-0222
CERTIFICATE/LICENSE NO. 001501

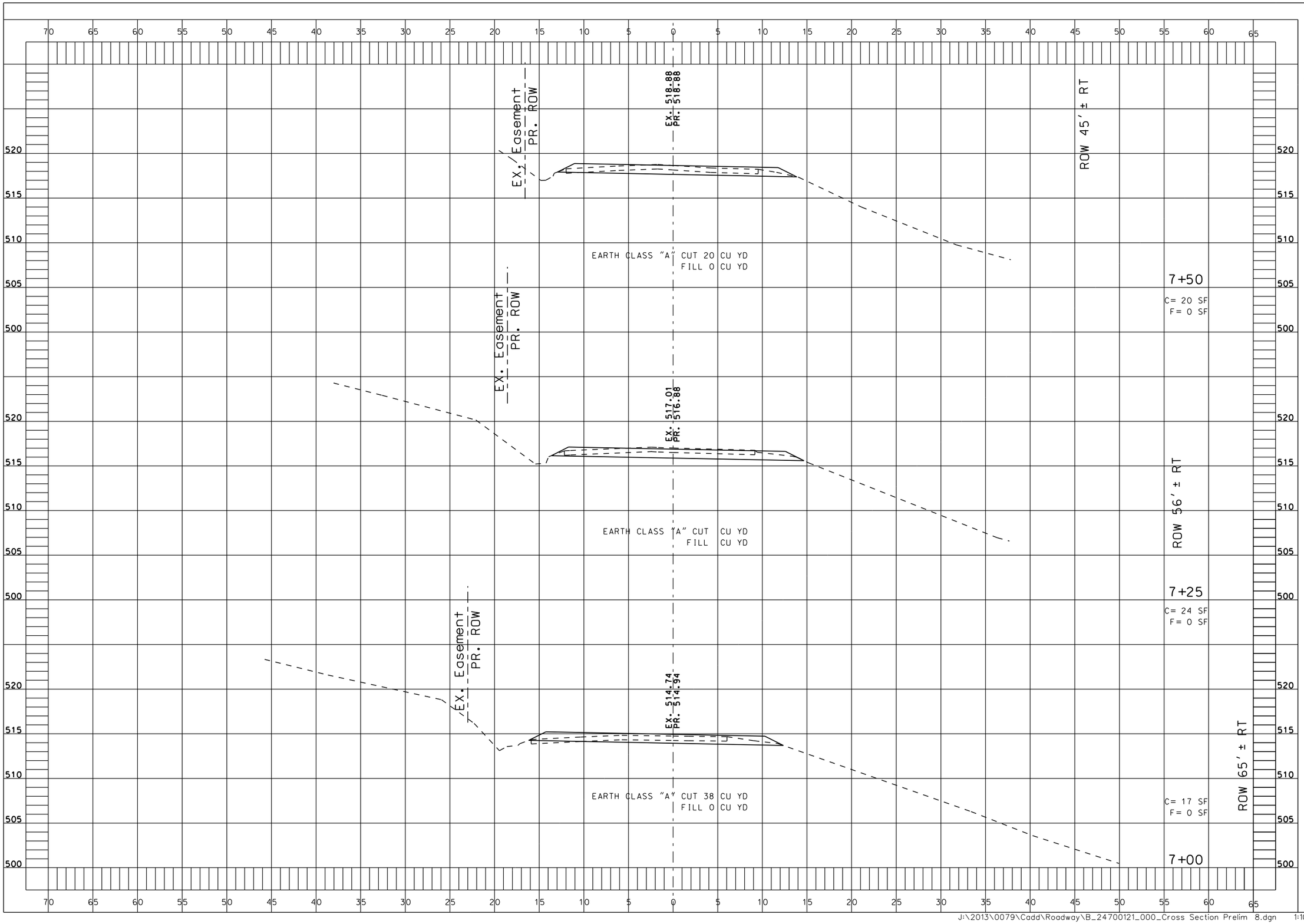

STATE OF MISSOURI
STEPHEN M. SEELY
NUMBER
E-24698
REGISTERED PROFESSIONAL ENGINEER

DATE PREPARED	1/20/2016
STATE	MO
SHEET NO.	59
ROUTE	STROUP
COUNTY	JEFFERSON
JOB NO.	13-0079
PROJECT NO.	STP-5403 (656)
BRIDGE NO.	24700121

DATE	DESCRIPTION

IF A SEAL IS PRESENT ON THIS SHEET IT HAS BEEN ELECTRONICALLY SEALED AND DATED.

JEFFERSON COUNTY PUBLIC WORKS
DEPARTMENT

P.O. BOX 100
HILLSBORO, MO 63050
(636-797-5340) PHONE
(636-797-5565) FAX

ABNA
4140 LINDELL BOULEVARD
ST. LOUIS, MO 63108
PH. 314-454-0222
CERTIFICATE/LICENSE NO. 001501

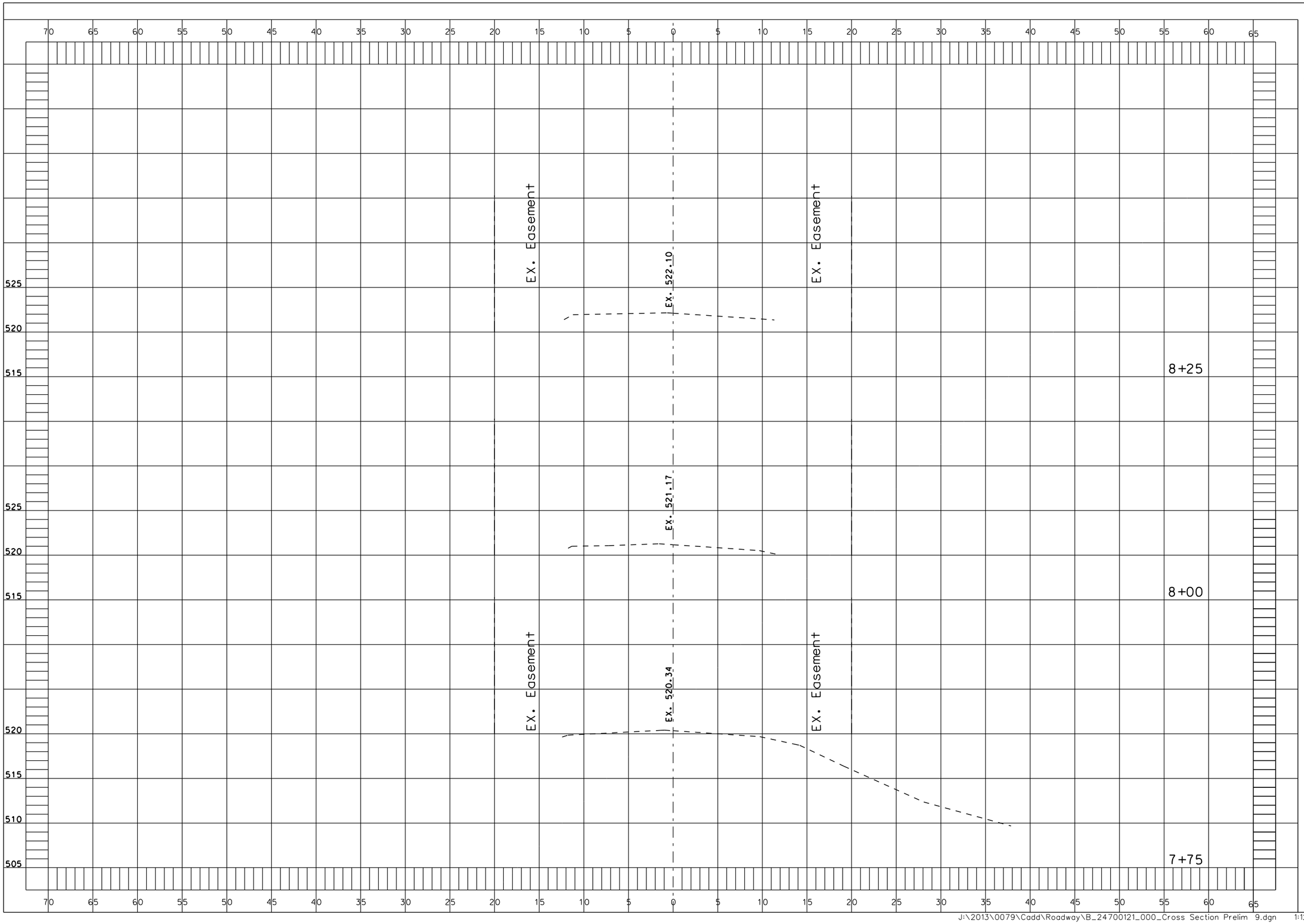

STATE OF MISSOURI
STEPHEN M. SEELE
NUMBER
E-24698
REGISTERED PROFESSIONAL ENGINEER

DATE PREPARED	1/20/2016
STATE	MO
SHEET NO.	60
ROUTE	STROUP
COUNTY	JEFFERSON
JOB NO.	13-0079
PROJECT NO.	STP-5403 (656)
BRIDGE NO.	24700121

DATE	DESCRIPTION

JEFFERSON COUNTY PUBLIC WORKS
DEPARTMENT

P.O. BOX 100
HILLSBORO, MO 63050
(636-797-5340) PHONE
(636-797-5565) FAX

ABNA
4140 LINDELL BOULEVARD
ST. LOUIS, MO 63108
PH. 314-454-0222
CERTIFICATE/LICENSE NO. 001501

IF A SEAL IS PRESENT ON THIS SHEET IT HAS BEEN ELECTRONICALLY SEALED AND DATED.

J:\2013\0079\Cadd\Roadway\B_24700121_000_Cross Section Prelim 9.dgn 1:12:58 PM 1/20/2016